SERIES 8700Q

PUMPS AND DISPENSERS

INSTALLATION/OPERATION

MANUAL

038702

REV. 12/03/03

INSTALLERS - IMPORTANT

In addition to installation information, this manual contains warnings, safeguards and procedures on the use and care of the Series 8700Q pumps. Please leave this manual with the pump owner after the installation is complete.

Copyright 2003 by Gasboy International LLC All rights reserved.
The information in this document is confidential and proprietary. No further disclosure shall be made without permission from Gasboy International LLC. Gasboy International LLC believes that the information in this document is accurate and reliable. However, we assume no responsibility for its use, nor for any infringements of patents or other rights of third parties resulting from its use. We reserve the right to make changes at any time without notice.

GASBOY INTERNATIONAL LLC LANSDALE, PA

IMPORTANT WARNINGS AND SAFEGUARDS

Gasoline and petroleum products are flammable. To avoid injury or death to persons or damage to equipment or property, follow these listed warnings and other warnings and precautions outlined in this manual when installing, using, or working around this equipment. Check with GASBOY Technical Services for compatibility of liquids with pump materials.

TURN OFF AND LOCK OUT ALL POWER TO PUMP BEFORE PERFORMING SERVICE, MAINTENANCE OR IN THE EVENT OF A FUEL SPILL.

All products must be installed by a qualified installer and used in conformance with all building, fire, and environmental codes and other safety requirements applicable to its installation and use, including, but not limited to, NFPA 30, NFPA 30A, NFPA 395 & NFPA 70. A qualified installer is familiar with fuel systems installations under the above stated building, fire, and environmental codes and other safety requirements for the particular type of installation.

This product is only part of a fuel dispensing system and additional equipment and accessories, such as, but not limited to, breakaway connectors, shear valves, pressure regulators, flow limiters, and other safety devices may be necessary to meet the applicable codes.

For maximum safety, we recommend that all employees be trained as to the location and procedure for turning off power to the entire system. Instructions regarding proper operation of the equipment along with the appropriate safety warnings should be posted in plain view at the fuel island.

Before performing service or maintenance (including changing of fuel filters or strainers) or in the event of a fuel spill, turn off and lock out all power to the system. In battery-powered pumps, disconnect power source. In submersible pump applications, turn off and lock out power at the master panel and close any impact valves to the submersible pump and any other dispensers which use that submersible pump. AC power can feed back into a shut-off dispenser when dispensers share a common submersible pump or starter relay. Also block islands so no vehicles can pull up to the dispenser when the dispenser is being worked on.

DO NOT use Teflon tape for any pipe threads in the product.

DO NOT use consumer pumps for pumping fuel or additives into aircraft.

DO NOT use commercial pumps for direct fueling of aircraft without filters and separators necessary to ensure product purity.

DO NOT use where sanitary design is required (for food products for human consumption) or with water-based liquids.

DO NOT smoke near the pump or when using the pump.

DO NOT use near open flame or electrical equipment which may ignite fumes.

DO NOT permit the dispensing of gasoline or other petroleum products into a vehicle with its motor running.

DO NOT permit the dispensing of gasoline or other petroleum products into unapproved containers or into approved containers in or on vehicles including trucks. All containers must be filled on the ground to prevent static discharge. Always use Approved and Listed hoses and nozzles with electric pumps and dispensers.

DO NOT block open the nozzle in any manner. Nozzles shall conform to UL and NFPA code requirements for attended or unattended service.

DO ensure that the pump is equipped with proper filters based on the product being dispensed and its intended use.

DO wear safety goggles and protective clothes when dispensing any liquid which may be potentially harmful or hazardous.

DO keep all parts of body and loose clothing clear of belts, pulleys, and other exposed moving parts at all times.

DO require washing and changing of clothes if fuel is spilled on a person or his/her clothing. Keep away from open flames, sparks, or people smoking.

DO provide a receptacle for catching product from pump/meter when servicing.

DO clean up product spills on the driveway. Turn off and lock out all power prior to cleanup.

DO insure pump is properly grounded.

DO insure hose is compatible with fluid being dispensed.

DO inspect hose, nozzle, and pump on a regular basis for wear, damage, or other conditions which may create a safety or environmental hazard.

DO make sure all pipe threads are properly cut and the inside reamed to remove burrs. Use UL classified gasoline-resisting compound on all joints of gasoline handling piping. Sealing compound must also be resistant to Gasohol (Ethanol and Methanol). Use gasoline-resistant pipe compound on male threads only; pipe compound used on female threads can be squeezed into the supply line where it can enter the product stream and become lodged in the pump or meter.

DO ensure that junction box covers are in place and properly tightened. Mating surfaces between the box and cover must be free of dirt, nicks, and scratches. All unused entries into the junction box must be properly plugged.

GASBOY INTERNATIONAL LLC.
707 North Valley Forge Rd. Lansdale, PA, 19446 ● (215) 855-4631 ● FAX: (215) 855-0341

CONTENTS

IMPORTANT WARNINGS AND SAFEGUARDS FOR COMMERCIAL PUMPS

CONTENTS Contents-1
INTRODUCTION 1-1
Purpose 1-1
General Description 1-1
INSTALLATION 2-1
Installation Precautions 2-1
Foundation 2-2
Suction Pump 2-2
Remote Dispenser 2-2
Nozzle, Hose, And Accessories 2-3
Supply Line 2-3
Single Pump/Remote Dispenser Dimensions 2-4
Twin Pump/Remote Dispenser Dimensions 2-5
011986 Base Layout, Model 8753QTW1 2-6
011987 Base Layout, Model 8753QTW2 2-7
011988 Base Layout, Model 8753QTW1M 2-8
011989 Base Layout, Models 8753Q 2-9
011990 Base Layout, Models 8753QXTW2 2-10
011992 Base Layout, Model 8753QX 2-11
011993 Base Layout, Model 8753QXTW1 2-12
CONTROL LINES 3-1
Purpose 3-1
Grounding 3-1
Reset Motor Feed 3-1
Pump Motor Feed 3-1
Return 3-2
Submersible Feed, Submersible Drive 3-2
Reset Complete (Switch Detect)/Slow Flow 3-2
Fast Flow 3-2
Light Feed 3-2
Phase 2 Feed 3-2
Pulser 3-2
WIRING 4-1
Wiring Precautions 4-1
Grounding 4-2
Circuit Breakers 4-2
The Pump Motor 4-2
Motor Amp Ratings 4-2
Wire Size 4-3
Conduit 4-4
Wiring Diagrams 4-5
024212 Wiring Diagram 4-6
024213 Wiring Diagram 4-7
024214 Wiring Diagram 4-8
024222 Wiring Diagram 4-9
024223 Wiring Diagram 4-10
024224 Wiring Diagram 4-11

PULSERS.....5-1
General.....5-1
Wiring.....5-1
Reed Pulsers.....5-2
Electronic Pulsers.....5-3
START-UP.....6-1
Completion Check List.....6-1
Start-Up.....6-1
Post Start-Up Tests.....6-2
Power Reset External Adjustment.....6-3
Changing The Price.....6-4
OPERATING SEQUENCE.....7-1
Pump.....7-1
Remote Dispenser.....7-1
PREVENTIVE MAINTENANCE.....8-1
General.....8-1
Hints For Better Pump Performance.....8-1
Preventive Maintenance Check List.....8-2

Section 1

INTRODUCTION

PURPOSE

The GASBOY *Series 8700Q Pumps and Dispensers Installation/Operation Manual* is provided to assist the installer in installing and operating the unit. This manual should be supplied to the electrician prior to the installation of conduit and wiring to ensure the Series 8700Q dispensing unit is installed properly. Faulty installations are the major cause of unit malfunctions. The unit **must** be installed and operated as described in this manual to ensure the reliability and proper operation of the Series 8700Q dispensing unit. In addition to installation information, this manual contains warnings, safeguards and procedures on the use and care of the Series 8700Q pumps and remote dispensers. Be sure to leave this manual with the pump/dispenser owner after the installation is complete.

Customers and installers having any questions pertaining to the installation should contact their GASBOY distributor.

GENERAL DESCRIPTION

The GASBOY Series 8700Q dispensing units are UL-listed and are available in a self-contained (suction pump) package or in a remote-controlled (dispenser) package. Both packages offer a variety of models which are available as single hose outlets or dual hose outlets (with single or dual product capability). The self-contained models are available in standard speed, up to 15 GPM/56 LPM; in high speed or up to 22 GPM/83 LPM. The rate of delivery for the remote-controlled packages will vary according to the size of the submersible pump. The delivery rate of both packages will also vary depending upon installation conditions and added accessories.

The Series 8700Q offers the following features:

At a glance:

	Suction Pumps	**Remote Dispensers**	**Features**
Standard Speed Models	8752Q 8752QTW1 8752QTW2	8752QX 8752QXTW1 8752QXTW2	Inlet: 1-1/2" NPT Discharge: 3/4" NPT (female threads) Motor: 3/4 HP continuous duty Valves (dispenser only): 1"
High Speed Models	8753Q 8753QTW2 8753QTW1M	8753QX 8753QXTW1 8753QXTW2	Inlet: 1-1/2" NPT Discharge: 1" NPT (female threads) Motor: 3/4 HP continuous duty Valves (when used): 1"

Other standard features and specifications of the Series 8700Q are:

- **Cabinet:** Painted black top and sides, white front and rear doors and white dial enclosures. Dimensions are 29-1/16"W, 18-3/8"D, 52-5/8"H.
- **Meter:** Four piston, positive displacement.
- **Pump:** Belt-driven, positive-displacement rotary vane with an 80 mesh (300 micron) strainer and integral air separation.
- **Motor:** (See chart earlier in this section).
- **Electric reset** with a reset complete (switch detect) lead. When used with optional pulser outputs, allows fueling to be monitored by an automated fuel management system.
- Two stage electric **solenoid valves** (on all remote dispensers and 8753QTW1)
- Island-oriented **nozzle boots**.
- UL-Listed **hose assembly**, 3/4"x 12' for standard speed; 1" x 12' for high and super speed.
- Designed to support UL-Listed Interchangeable service station **nozzles** (not included).
- **Hose hangers**.
- **Mechanical full-computing register with electric reset** Mechanical pump registers show the total currency amount for a delivery, the total volume for a delivery, and the price per unit. All computers read up to 999.9 gallons or liters. The standard computer (Veeder-Root VR10/4) reads up to $99.99 per sale with a price that may be set up to $3.99 per gallon/liter. The high capacity computer (VR10) will read up to $999.99 per sale with a price that may be set up to $5.999 per gallon/liter. The volume and currency registration will vary according to the order.
- **Mechanical totalizers**, money and volume totalizers for each hose, records up to 9,999,999.9 liters or gallons and money up to $999999.99 units of currency.
- **Fluids:** Gasoline, diesel, kerosene. Not suitable for methanol/ethanol blends.
- **Agencies:** UL, CUL, W&M.

Optional accessories:

- 10:1, 100:1 money or volume pulsers
- internal hose retractor
- inlet check valve on suction pumps
- internal fuel filter adapter
- lighted displays
- solenoid valves
- satellite piping
- stainless steel exterior
- 230 or 380VAC operation
- liter registration
- manual hand crank
- Listed automatic nozzles
- special lengths of hose
- Listed swivels and breakaways
- spin-on filter elements
- special painting
- Listed emergency shutoff valves
- Listed pressure regulating valve for aboveground tank applications used with suction pumps.

Section 2

INSTALLATION

INSTALLATION PRECAUTIONS

All installations must conform with all building/fire codes, all Federal, State, and Local codes, National Electrical Code, (NFPA 70), NFPA 30, and Automotive and Marine Service Station Code (NFPA 30A) codes and regulations. Canadian users must also comply with the Canadian Electrical Code.

Plan your installation carefully. A pump/remote dispenser cannot be expected to work satisfactorily unless the underground installation is correct. Dispensing troubles, which seem to be pump-related, are frequently traced to faulty installation. Review the following list of installation **DO's** and **DON'T's** to avoid potential problems:

1. **DO** read the **WARNINGS** page at the front of this manual, preceding the Table of Contents. It contains important information regarding the safe use of your dispensing equipment.
2. **DO** install an emergency power cutoff. In addition to circuit breaker requirements of NFPA 70 and NFPA 30A, a single control which simultaneously removes AC power from all site dispensing equipment is recommended. This control must be readily accessible, clearly labeled, and in accordance with all local codes.

   In a fuel management system application, the EMERGENCY STOP and STOP keys on the console and/or the optional EMERGENCY STOP button on the Island Card Reader do not remove AC power from equipment and under certain conditions, will not stop product flow.

   In order to provide the highest level of safety to you, your employees, and customers, we recommend that all employees be trained as to the location and procedure for turning off power to the entire system.
3. **DO** have the pump/remote dispenser installed by a competent installer/electrician.
4. **DO** install breakaway coupling on discharge hose. If using a high hose retriever, install breakaway approximately 12" downstream of hose clamp on nozzle side of clamp.
5. **DO NOT** experiment with a pump if you are not sure the installation is correct.
6. **DO NOT** overload sub- or main breaker panels.
7. **DO NOT** install any underground piping without proper swing joints. (Always use shoulder nipples, never close nipples).
8. **DO NOT** cover any lines until they have been both air- and liquid-tested.
9. **DO NOT** back-fill the tank or supply line with cinders or ashes. (Back-fill with clean sand, crushed rock, or pea gravel).
10. **DO NOT** use black iron pipe or fittings for underground installations. (Use only new galvanized or fiberglass* pipe and fittings). *Install all fiberglass pipe and fittings according to manufacturer's specifications and requirements.
11. **DO NOT** use power line wiring of inadequate capacity. (Use gauge specified by the wiring diagram or wire chart provided in Section 4).
12. **DO NOT** use a circuit breaker of improper size. (See Section 4).
13. **DO NOT** install fill pipe to tank where it can be submerged with standing water.

14. **DO NOT** use the GASBOY fuel dispensing equipment to remove water ballast from the storage tank.
15. **DO NOT** use gaskets on covers of explosion-proof type boxes. The sealing compound found around wires at various locations within conduit is a requirement of the National Electrical Code and should not be disturbed. Ensure that the mating surfaces between the junction box and cover are free of dirt, debris, nicks and scratches. Tighten junction box covers before replacing panels.
16. **DO NOT** use knock-out boxes or flexible conduit for installing this unit. All power and lighting wires should be run in threaded, rigid, metal conduit. All threaded connections must be drawn up tight with five (5) threads minimum engagement. Only one opening in the AC junction box is provided with a plug at the factory. At completion of the installation, it is the installer's responsibility to ensure that any unused openings are plugged.

FOUNDATION

Make sure that your installation conforms to the applicable codes required by Federal, State, and local agencies concerning secondary containment underneath the dispenser. Follow the installation requirements of the secondary containment manufacturer to ensure that your site is environmentally safe and to minimize the entrance of water under the dispenser.

Secure the pump/remote dispenser to the island using anchor bolts through the two mounting holes, which are 13 inches (330mm) apart and are indicated on each base layout. If the dispensing unit is not securely fastened to the island, supply line leaks at unions and pipe joints may occur. Use one of two types of bolts to anchor the pump to the island. Use two (2) 1/2" x 5" (13mm x 125mm) machine bolts imbedded in the concrete, or, to meet minimum UL and API requirements for universal interchangability of pumps, use two 1/2" x 3 1/2" (13mm x 90mm) lag screws with 2" (51mm) expansion shields.

SUCTION PUMP

The pump and the tank should be located close to each other with as few changes in direction of the supply line, as possible. This reduces the possibility of vaporization (gasoline only), attains the highest possible flow rate, and results in a lower installation cost. Avoid long supply lines and excessive vertical lifts. The dynamic lift for this unit is rated at 12 feet (3.66m) for gasoline and 13 feet (3.96m) for diesel and can vary according to conditions of the installation and fuel temperature.

If a pump is to be used with an above-ground tank, a pressure regulator valve is required on the suction side of the pump; consult your GASBOY representative for details. The tank should be free of water and dirt. It is recommended that the tank be pressure tested to verify it is tight.

NOTE: The outlet fitting at the top of the float chamber should be connected to drain back to the storage tank. The pipe size for the return line to the storage tank should be at least 3/8" (9.525mm).

REMOTE DISPENSER

Locate the remote dispenser and tank with submersible pump as close to each other as possible to attain minimum possible pressure drop and the highest possible flow rate, consistent with the pump capacity. Consult the submersible pump manufacturer's recommendations for pipe sizing and installation instructions pertaining to the model of submersible pump being installed.

A Listed emergency shut-off valve (OPW 10RUS or equal) must be installed under each remote dispenser with the shear groove at the same level as the top of the concrete island ± 1/2" (12.7mm). The shutoff valve should be rigidly supported to insure proper shearing and closure of the valve in the event the remote dispenser is dislodged. According to the type of shear valve, a different supply nipple may be required.

After a shear valve has operated on an emergency basis from fire or mechanical shock, or if it does not operate correctly when inspected, repairs must be made before putting the remote dispenser into service.

It is required by the Flammable and Combustible Liquids Code that a leak detector be installed in the system to prevent underground leaks from going unnoticed.

NOZZLE, HOSE, AND ACCESSORIES

This unit is normally equipped for use with a UL-Listed interchangeable service station type nozzle. Only UL-Listed hose assemblies and accessories are to be used with this device. A Listed breakaway connector must be installed on all hose assemblies.

SUPPLY LINE

Use new galvanized or fiberglass (see note) pipe, 1 1/2" (38.1mm) minimum diameter.

NOTE: Fiberglass pipe is to be installed according to manufacturer's specifications and requirements.

Be sure both the pipe and the tank are clean. Foreign matter entering the pump can cause extensive damage. Obstructions in the supply line can create pump problems and reduced flow rate.

Make sure all pipe threads are properly cut and the inside reamed to remove burrs. Use Listed gasoline-resistant compound on all joints of gasoline handling piping. Sealing compound must also be resistant to Gasohol (Ethanol and Methanol). **Do not** use Teflon Pipe Sealing Tape. Use gasoline-resistant pipe compound on male threads only; pipe compound used on female threads can be squeezed into the supply line where it can enter the product stream and become lodged in the pump or meter. Install swing joints under the pump and at the tank to avoid breaks in the supply line from settling or frost heave.

To avoid product delivery problems on suction pumps, be sure there are no traps in the supply line. Supply lines, for both suction pumps and submersible pumps, should go straight down beneath the pump to a point 18 inches (45.7cm) below the ground level and pitch at a rate of 1/8 inch (3.18mm) per foot (.305m) from there down to the storage tank. The supply line should be as short and direct as possible with swing joints at all turns. Support the horizontal run of pipe at 10-foot intervals to maintain pitch and prevent traps. Do not use wood as pipe supports.

New EPA regulations require that only one check valve be used per supply line and located directly below, and as close as practical to the suction pump. Do not use spring-loaded or union check valves since these will unnecessarily reduce the flow rate and contribute to the reduction of atmospheric pressure necessary to keep gasoline in a liquid state.

Upon completion of installation, all liquid-carrying lines must be checked for leaks.

SINGLE PUMP/REMOTE DISPENSER DIMENSIONS

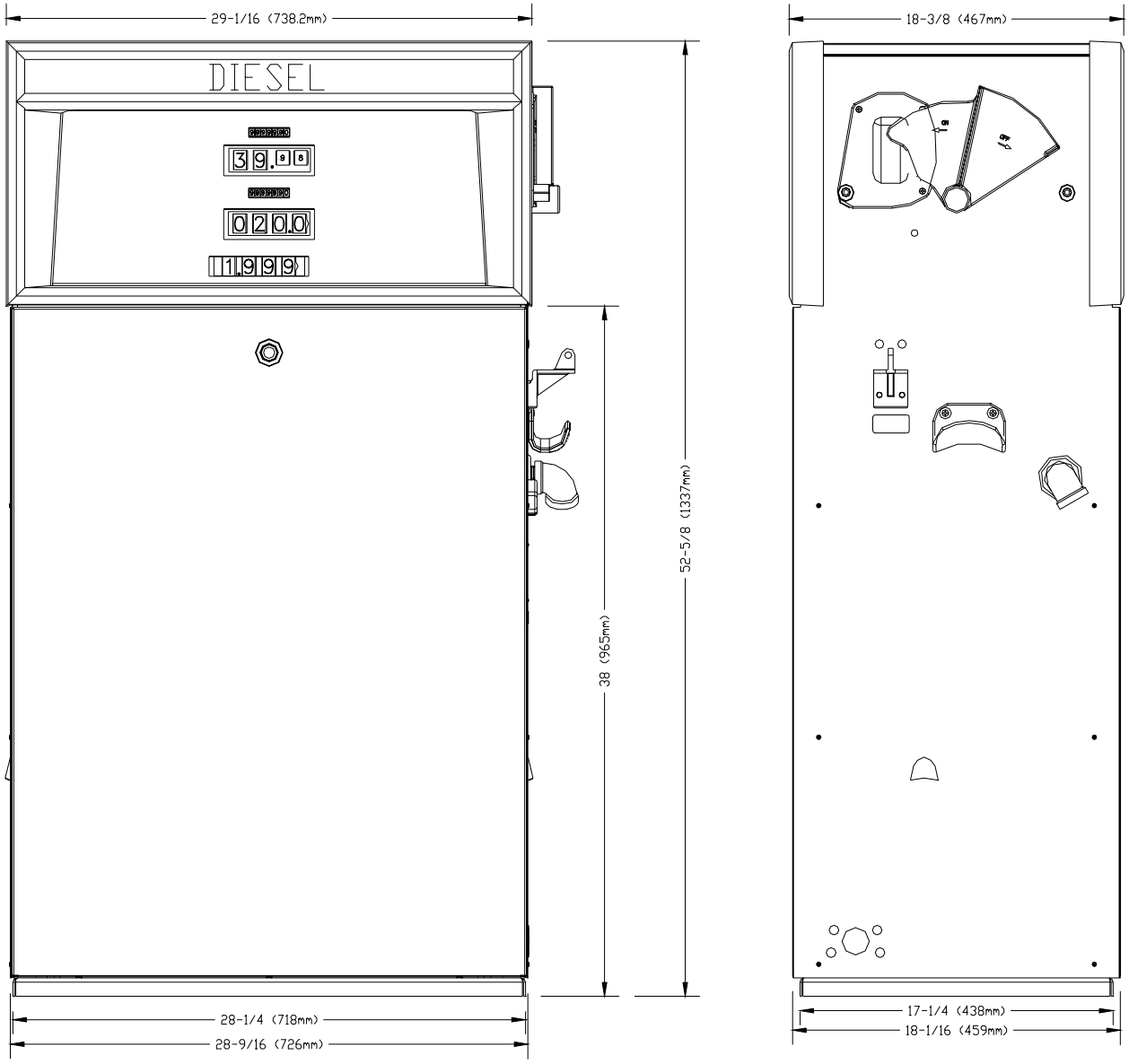

TWIN PUMP/REMOTE DISPENSER DIMENSIONS

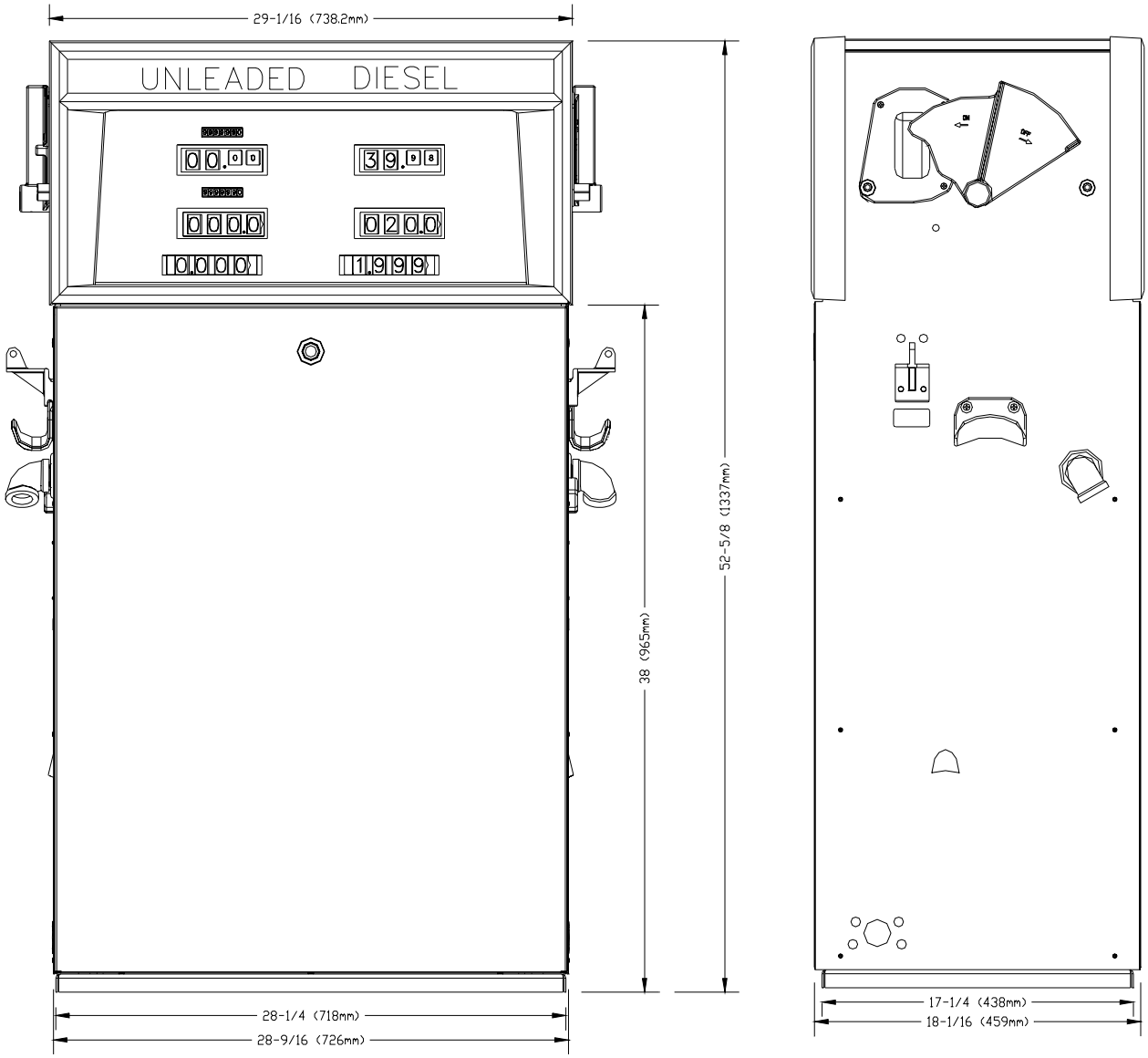

011986 BASE LAYOUT, MODEL 8753QTW1

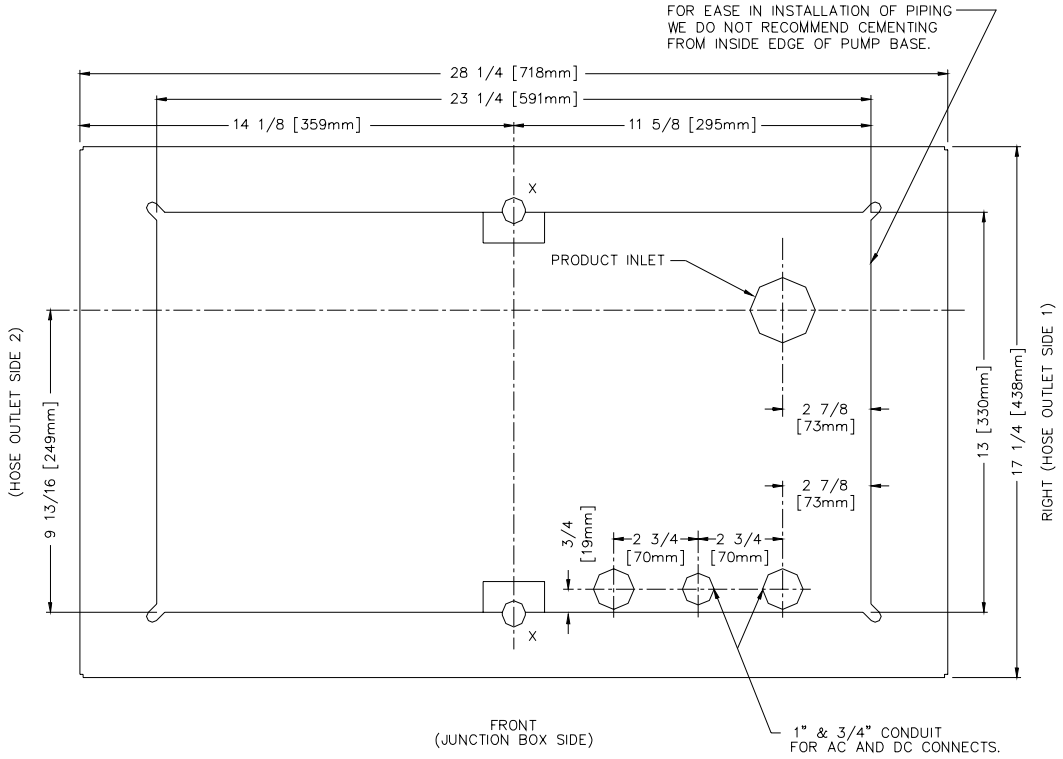

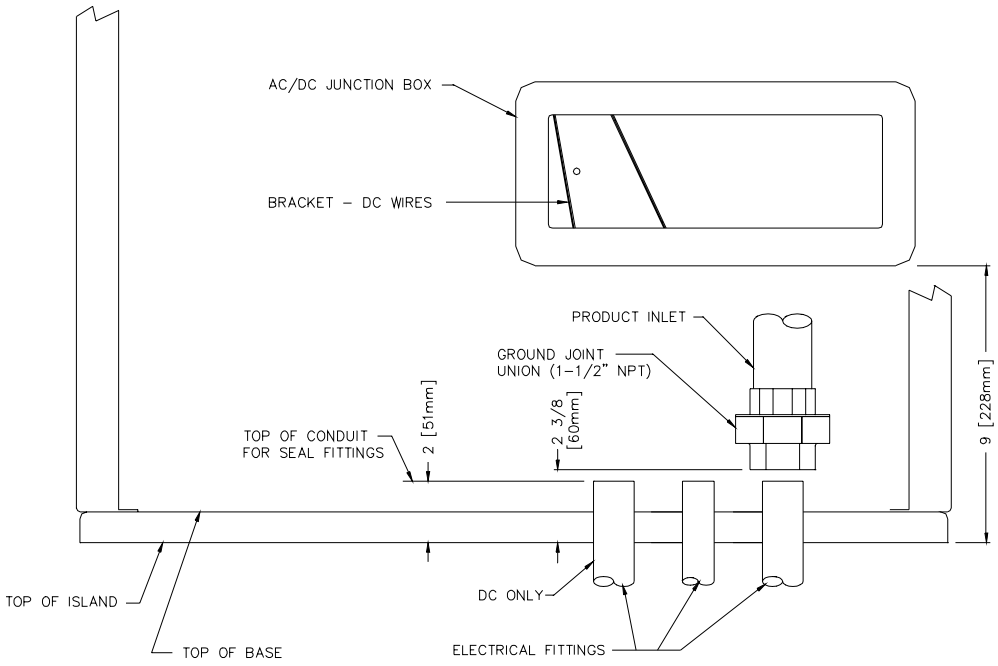

011987 BASE LAYOUT, MODEL 8753QTW2

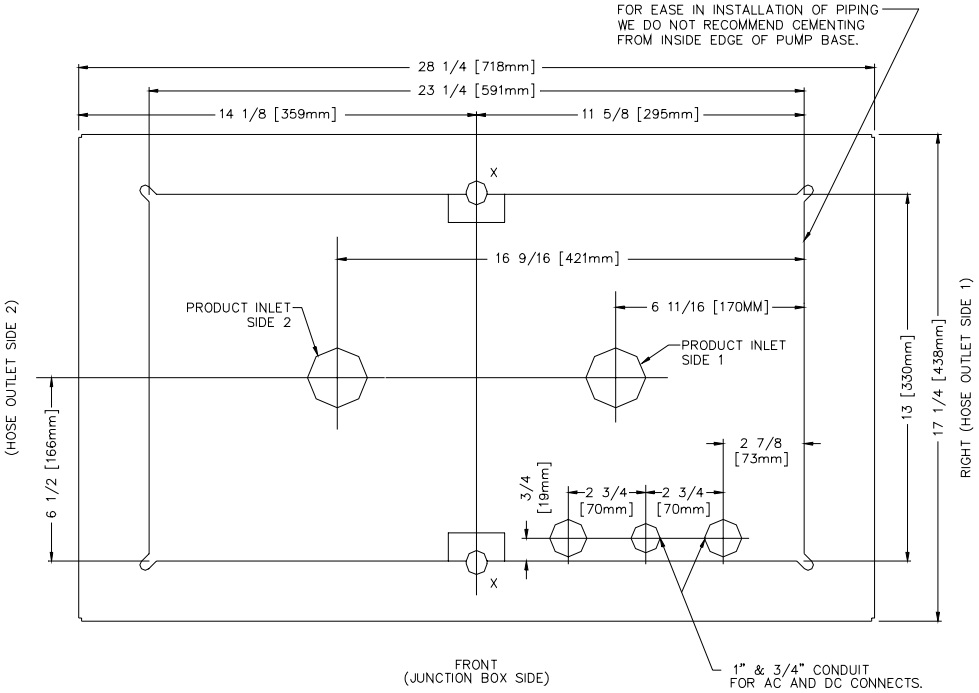

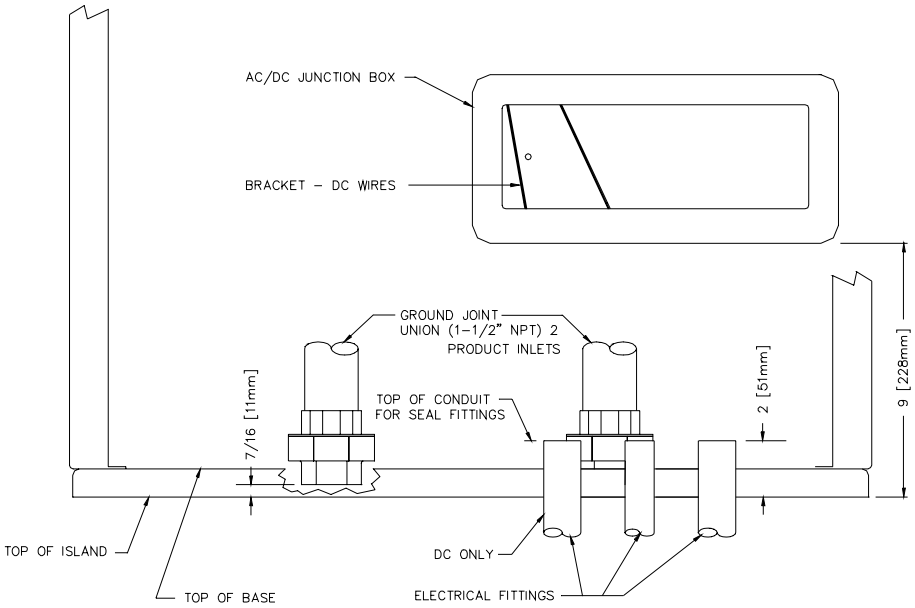

011988 BASE LAYOUT, MODEL 8753QTW1M

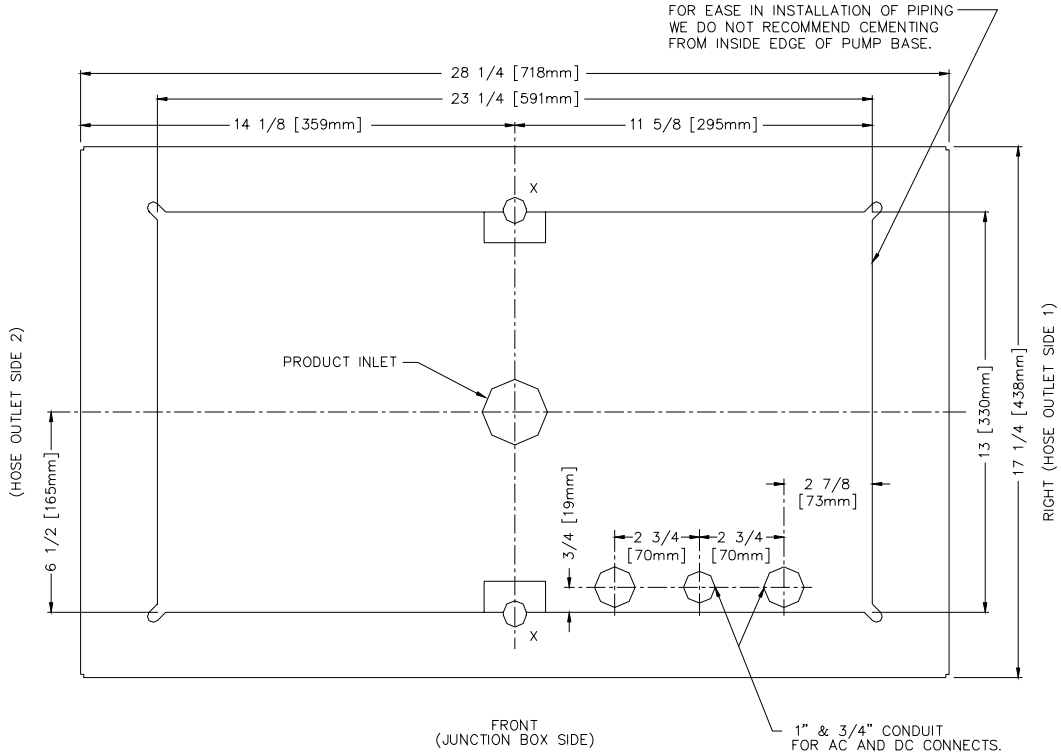

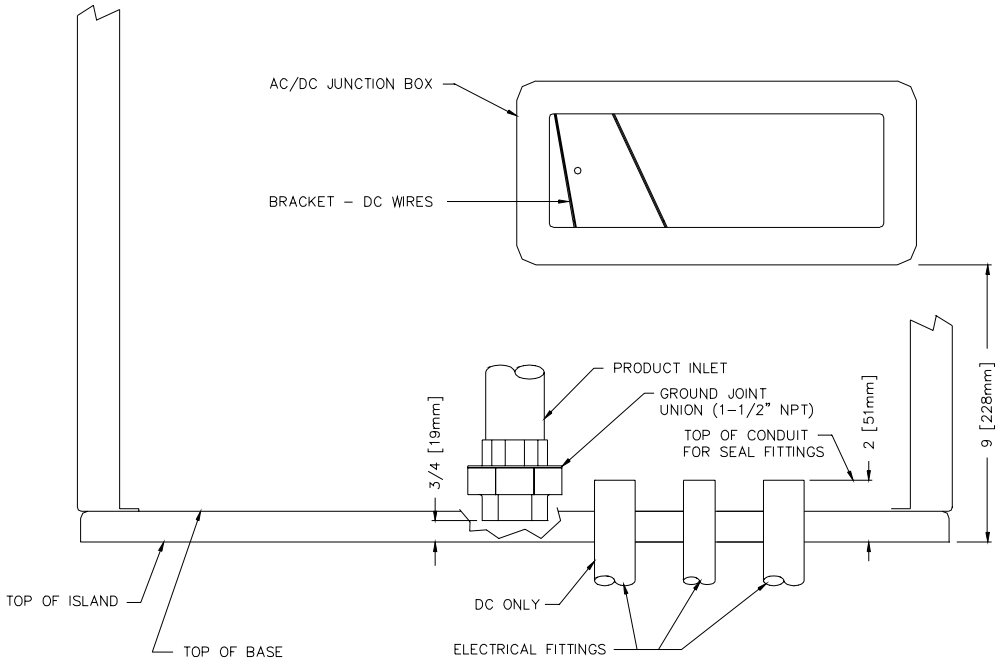

011989 BASE LAYOUT, MODEL 8753Q

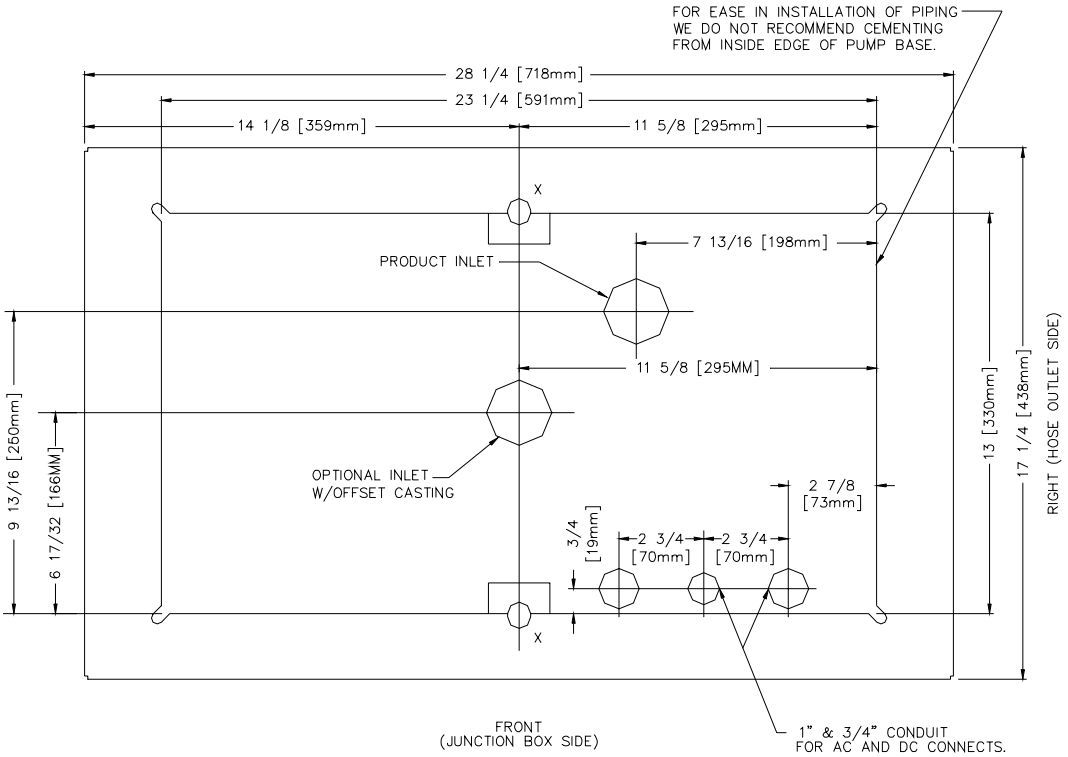

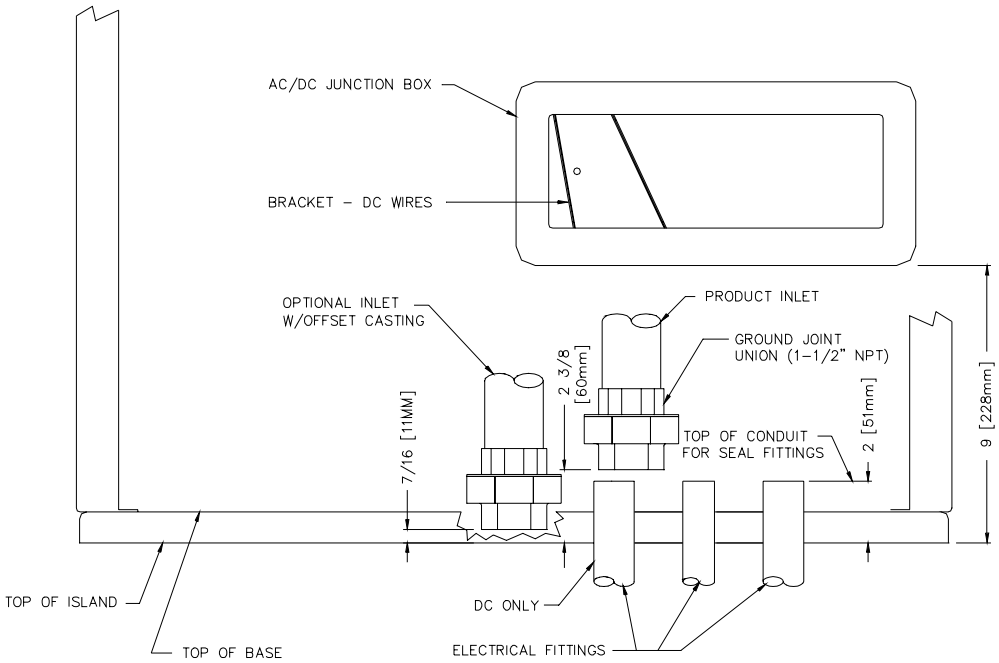

011990 BASE LAYOUT, MODEL 8753QXTW2

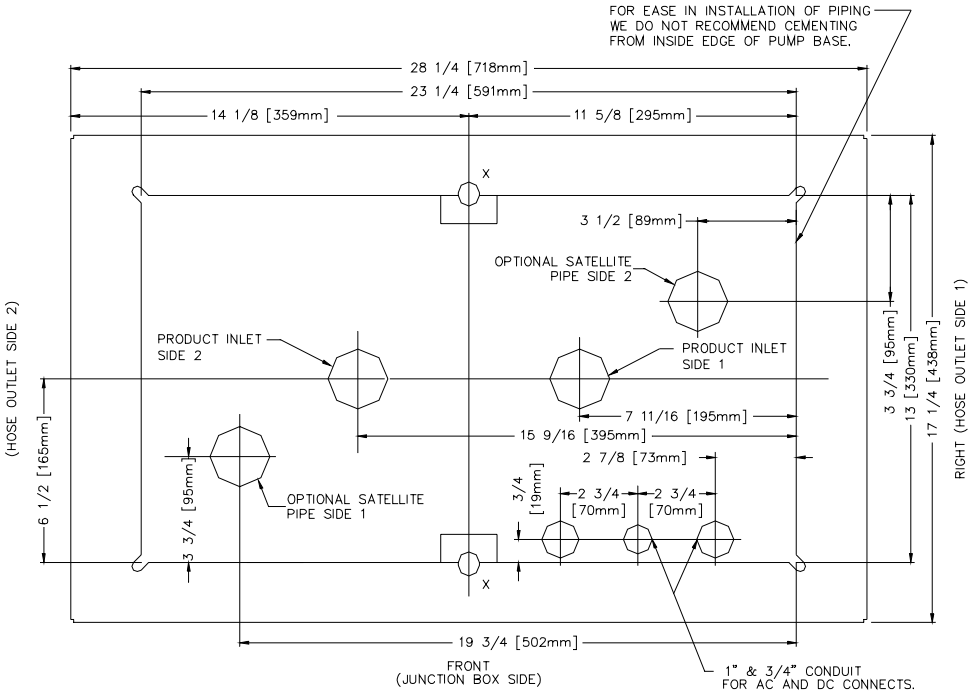

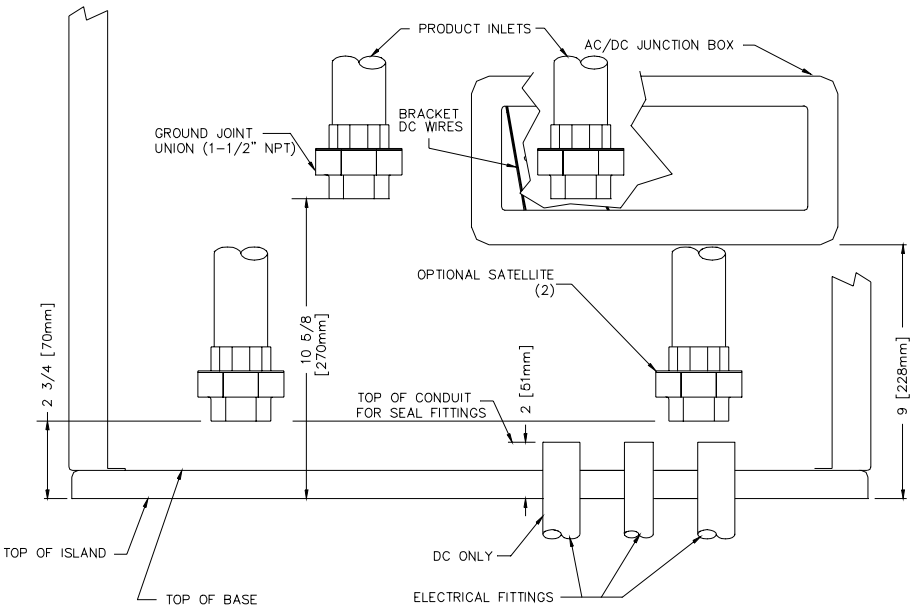

011992 BASE LAYOUT, MODEL 8753QX

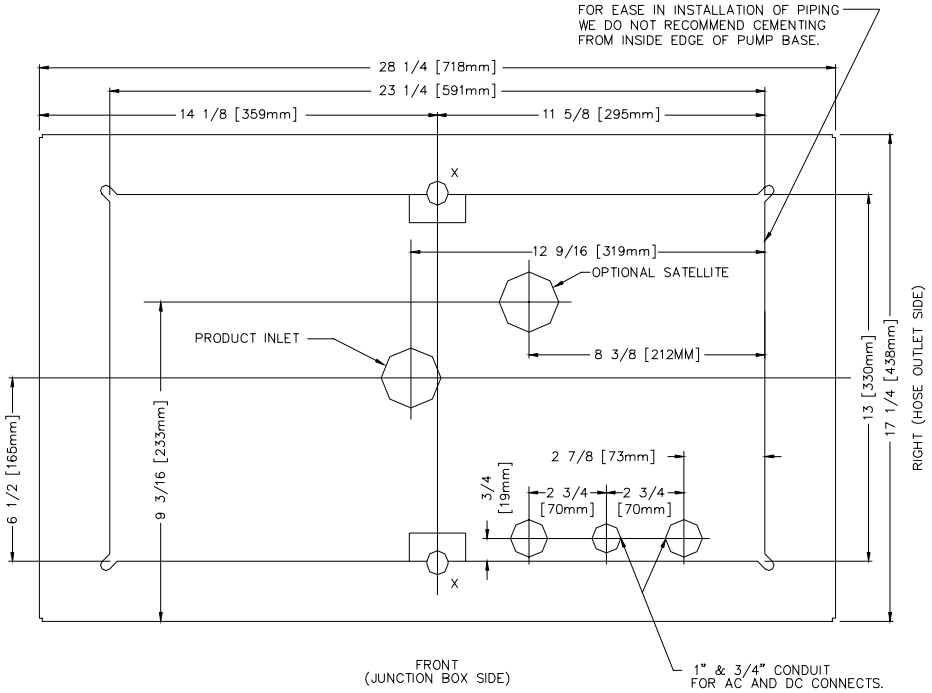

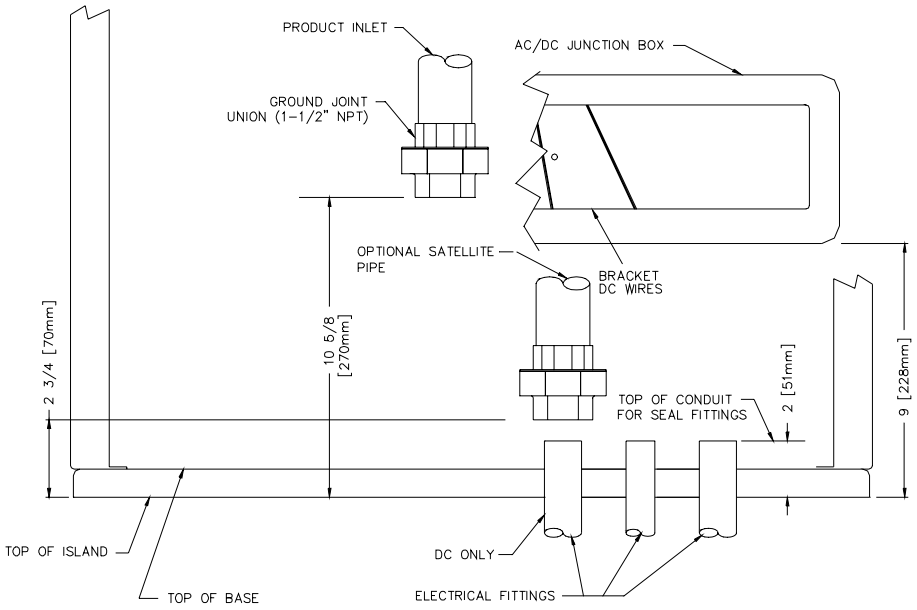

011993 BASE LAYOUT, MODEL 8753QXTW1

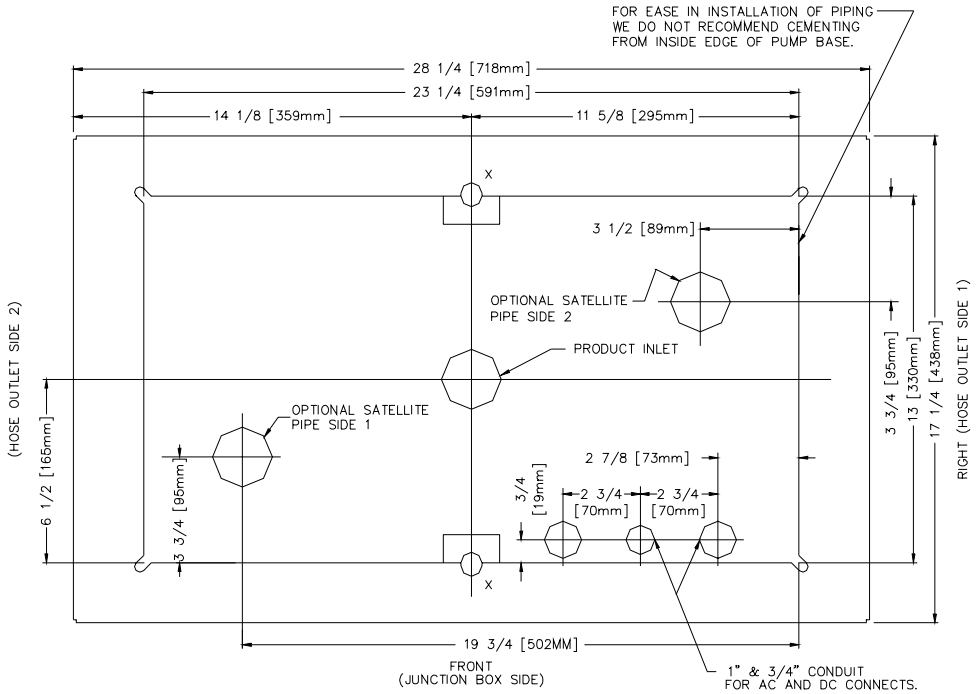

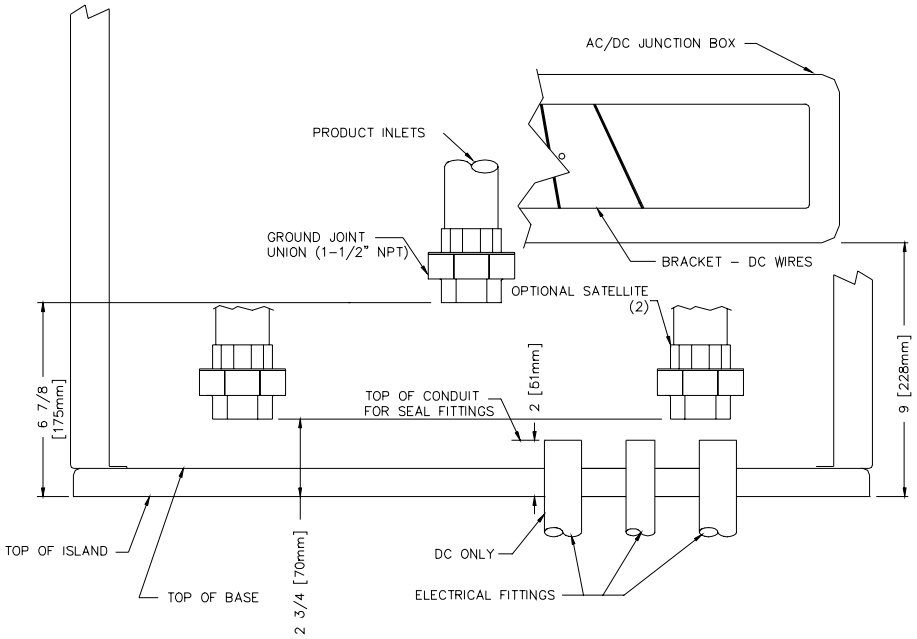

Section 3

CONTROL LINES

PURPOSE

This section is provided to familiarize the installer with the control inputs and outputs that are available for the Series 8700Q dispensing unit. It is recommended the installer read these descriptions to obtain a better working knowledge of the unit in order to guide him in planning the site wiring. Reference Section 4 for specific wiring diagrams and installation notes.

The Series 8700Q may be provided for use with 230 VAC power for international applications. The operating voltage for control lines to these units is shown in parentheses as (230 VAC Int'l).

GROUNDING

To ensure proper operation of the equipment and provide the necessary safety factors, a good ground line must be provided. A ground wire (preferably green) must be connected between the unit's AC junction box ground lug and the main electrical service panel. One (1) earth ground connection is required per unit. The ground rod is to be a solid, corrosion-resistant conductor and must be installed at the main electrical panel in accordance with the National Electrical Code. It should be properly tied into the ground bus strip of the panel. We recommend the neutral and ground bus strips be bonded together (unless prohibited by local codes).

RESET MOTOR FEED

The reset motor feed is a 115 VAC (230 VAC Int'l) input which is supplied through the pump handle switch to activate the reset motor. Without power supplied to this line, the unit will not reset when the pump handle is turned on. Two feed lines are provided for twins. This feed is also connected to the input of one of the internal switches of the electric reset. When the reset finishes its cycle, the 115 VAC (230 VAC Int'l) input to the switch will be passed through as an output causing the solenoid valve (optional in some models) to open and the reset complete line to indicate 115 VAC (230 VAC Int'l).

PUMP MOTOR FEED

The pump motor feed is a 115 VAC (230 VAC Int'l) input which is supplied to the input side of one of the internal switches of the electric reset. When the reset finishes its cycle, the 115 VAC (230 VAC Int'l) input to the switch is passed through as an output causing the pump motor to receive power and begin running. Without power to this line, the unit would reset, but be unable to fuel. Two feed lines are provided in twins which contain two motors. The gauge of this wire (and its neutral wire) should be determined according to the size of the motor, the voltage at which the motor will be powered (115VAC or 230VAC), and the distance from the breaker panel to the pump. It is possible to combine the pump motor feeds for twins and supply them from one breaker; however, the gauge of the wire needs to be adjusted to handle the load of two motors.

RETURN

The return is the AC current return line back to the breaker panel for all attached devices (pump motor, reset motor, solenoid valves). The gauge of this wire should be equal to that of the pump motor feed (suction pumps) or submersible feed (remote dispensers). This wire is commonly referred to as the neutral wire.

SUBMERSIBLE FEED, SUBMERSIBLE DRIVE

The submersible feed is a 115 VAC (230 VAC Int'l) input which is supplied to the input side of one of the internal switches of the electric reset. When the reset finishes its cycle, the 115 VAC (230 VAC Int'l) input to the switch is passed through as an output (submersible drive) to drive a starter relay or to directly drive a submersible motor up to 1 HP at 115VAC/230VAC. Any submersible motor exceeding this limitation must use a starter relay.

RESET COMPLETE (SWITCH DETECT)/SLOW FLOW

The reset complete is a 115 VAC (230 VAC Int'l) output which is used to indicate the reset is complete and the dispensing unit is ready to dispense product. Two lines are provided for twins. This line should only be used when monitoring of the dispensing unit is desired as when used with a Fuel Management System. This line must be capped when not in use. This line is connected to the slow flow stage of the solenoid in the pump.

FAST FLOW

This is a 115 VAC (230 VAC Int'l) input which controls the fast flow valve of the pump/remote dispenser (when a slow/fast flow valve is available) If slow/fast flow control is not desired, this line should be tied to the reset complete/slow flow line. The line should be switched through the fuel management system and only be on when the pump/remote dispenser is authorized and the pump/remote dispenser should be in fast flow mode. This line will be switched on when the pump/remote dispenser is in the manual mode.

LIGHT FEED

The light feed is a 115 VAC (230 VAC Int'l) input required to power the fluorescent lights. In a site configuration using multiple remote dispensers (or pumps), the power for the lights of up to 8 units can be supplied by 1 breaker. If separate control of the lights is not desired, the light feed for each dispensing unit may be taken from its Reset Motor Feed.

LIGHT NEUTRAL

The light neutral is a return line for AC current from the lights to the breaker panel. When a separate breaker is not used to control the lights, the light neutral is attached to the neutral which is connected to the reset motor.

PHASE 2 FEED

The phase 2 feed is a hot feed which is the opposite phase of the pump motor feed. This line and the pump motor feed are used for domestic 230VAC motor applications.

PULSER

The pulser supplies a DC output which is provided to indicate the quantity dispensed. Pulsers are optional and are only used when monitoring of the dispensing unit operation is desired as when used with a fuel management system.

Section 4

WIRING

Customers and installers having any questions pertaining to the installation should contact their GASBOY distributor.

WIRING PRECAUTIONS

The quality of the electrical installation is a major factor in maintaining proper safety levels and providing trouble-free operation of your GASBOY pump/remote dispenser. To assure a quality installation, follow these rules:

1. All wiring must be installed to conform with all building/fire codes, all Federal, State, and Local codes, National Electrical Code, (NFPA 70), NFPA 30, and Automotive and Marine Service Station Code (NFPA 30A) codes and regulations. Canadian users must also comply with the Canadian Electrical Code.
2. Use only threaded, rigid, metal conduit.
3. Use only UL-labeled insulated gasoline- and oil-resistant stranded copper wiring of the proper size.
4. Wire connections should be tightly spliced and secured with a wire nut; close off the open end of the wire nut with electrical tape.
5. The line to the motor should be on a separate circuit and installed on a 20 to 30 AMP breaker depending on the motor size and/or the voltage setting.
6. Install an emergency power cutoff. In addition to circuit breaker requirements of NFPA 70 and NFPA 30A, a single control which simultaneously removes AC power from all site dispensing equipment is recommended. This control must be readily accessible, clearly labeled, and in accordance with all local codes.

   In a fuel management system application, the EMERGENCY STOP and STOP keys on the console and/or the optional EMERGENCY STOP button on the Island Card Reader do not remove AC power from equipment and under certain conditions, will not stop product flow.

   In order to provide the highest level of safety to you, your employees, and customers, we recommend that all employees be trained as to the location and procedure for turning off power to the entire system.

   WARNING:
   To reduce the risk of electrical shock when servicing, turn off all power to the pump/remote dispenser. In submersible pump applications, turn off power to the submersible pump and any other remote dispensers which use that submersible pump. AC power can feed back into a shut-off dispenser when dispensers share a common submersible pump or starter relay.

7. Have the pump/remote dispenser installed by a competent installer/electrician.

GROUNDING

To ensure proper operation of the equipment and provide the necessary safety factors, this unit must be grounded. A ground wire (preferably green) must be connected between the unit's AC junction box ground lug and the main electrical service panel. One (1) earth ground connection is required per unit. The ground rod is to be a solid, corrosion-resistant conductor and must be installed at the main electrical panel in accordance with the National Electrical Code. It should be properly tied into the ground bus strip of the panel. We recommend the neutral and ground bus strips be bonded together (unless prohibited by local codes).

CIRCUIT BREAKERS

Power to the unit should be supplied from a dedicated breaker. No other equipment should be powered from this breaker. Remote dispensers may be grouped together on a single breaker when the submersible pump has its own breaker. It is recommended that no more than two remote dispensers be powered from one breaker to maintain isolated control with the circuit breaker panel in case of problems. Units directly driving pumps (suction or submersible) should be supplied power from a separate breaker. A tag on the motor identifies the maximum current draw of the motor. If two (2) pumps are supplied from one breaker, that breaker must be capable of handling the load of both motors. In cases where multiple remote dispensers supply power to a single submersible pump, all breakers controlling the remote dispenser must be on the same phase of power. Failure to do this will damage the equipment. Provisions must be made to break both legs of any AC circuit.

THE PUMP MOTOR

Pumps are shipped from the factory with motors wired according to the specifications given on the order as to kind of current, frequency and voltage.

Very often on installation, it becomes necessary to change the original setting to suit the AC power source. To do this, locate the motor change-over plate, typically located on the shaft end of the motor, and remove the screw which secures it in place. Slide the plate so that the desired voltage, as marked on the plate, lines up with the screw hole. Reinsert the screw and secure the plate in place.

Many motor failures result from improper setting of the motor change-over plate. If set for 115 VAC and a 230 VAC feed is used, the motor will burn out after running only a short time. If set for 230 VAC and a 115 VAC feed is used, the motor will run very slowly and the starting field will soon burn out.

MOTOR AMP RATINGS

The following chart shows the maximum **running** amperage that can be expected **for each** pump motor, unless noted otherwise:

Models	115v/60hz units	230v/60hz units	230v/50hz units
8753QTW1, 8753Q, 8753QTW2, 8753QTW1M	10.0	5.0.	6.0

NOTES:

1. *These numbers do not account for the higher load upon startup, nor up to one additional amp associated with other electrical components (lights, solenoid valves, etc.).*
2. *The 8753QTW2 and 8753QTW1M have one pump motor per side.*

WIRE SIZE

The table below shows the required AC wire size for suction and submersible pumps based on the HP rating of the pump motor and the distance from the circuit breaker to the pump/remote dispenser for both 115 and 230 volt units. Use this table as a guide for selecting the proper size wire for the **Pump Feed**, **Phase 2 Feed**, and **Return**.

The table also applies to the **Disp Feed**, and **Subm Drive** of a dispenser when the submersible pump is directly driven via the dispenser control circuitry. A starter relay must be used; however, when the submersible pump motor is greater than 1 HP at 115 VAC or 2 HP at 230 VAC. When using a starter relay for the pump motor, the control lines to the dispenser may be 12 AWG.

The AC wire size of the control lines of a pump (Reset Motor Feed, Pump Motor Feed, Neutral Feed, Phase 2 Feed) or remote dispenser (Reset Motor Feed, Submersible Feed, Submersible Drive, Neutral Feed) should be 12 AWG unless you are using a starter relay. A starter relay must be used whenever the submersible motor is greater than 1 HP at 115/230 VAC.

If multiple units are powered from the same breaker through the same wires, you must increase the gauge of the wires to handle the added load according to the distance from the breaker panel and the HP rating (if applicable).

The AC wire size for the Light Feed and Light Neutral, when the lights are wired from a single dedicated breaker, should be 14 AWG for distances up to 300 feet (91.4m) or 12 AWG for distances over 300 feet (91.4m).

The AC wire size for the Reset Complete (Switch Detect) and Fast Flow lines should be 14 AWG (when they are used).

The DC wire size for the Pulser lines must be 18 AWG (when they are used). Shielded cable as described in the **Pulser** section allows pulser lines to be run with the AC wires.

Wire Size

115 VOLT WIRE GAUGE SIZES PER FEET/METERS OF RUN								
FEET METERS	25' 8m	50' 15m	100' 31m	150' 46m	200' 61m	250' 76m	300' 91m	OVER 300' (91m) USE RELAY AT MOTOR LOCATION
MOTOR HP								
1/2	14	12	10	8	8	8	8	
3/4	14	12	10	8	6	6	4	
230 VOLT								
1/2	14	12	12	12	10	10	10	
3/4	14	12	12	10	10	10	8	
1-1/2	12	12	10	10	8	8	6	

CONDUIT

All wiring to the GASBOY Series 8700Q dispensing unit must be installed in threaded, rigid, metal conduit. **PVC is not acceptable.** When the Series 8700Q dispensing unit is used with a GASBOY fuel management system, it is recommended that AC power wires be installed in a separate conduit from the DC pulser; they should not run in any sort of common conduit or trough. However, if AC and DC power wires share conduit, pulser wiring must use the cable as specified in the **Pulsers** section.Wiring between a Fuel Point Reader (FPR) and its pre-amp junction box is intrinsically safe and must be run in a conduit with only other intrinsically safe wiring. It cannot be run in conduit with AC, DC, RS-485, or pulser wiring, regardless of the cable type used. See the *Fuel Point Reader Installation and Retrofit Manual, C35628* for details.

When using a fuel management system other than a GASBOY system, see the manufacturer's installation manual for specific conduit requirements.

All wiring and conduit runs must also conform with the National Electrical Code (NFPA 70) and the Automotive and Marine Service Station Code (NFPA 30A). All wiring and conduit runs must conform to local codes. Canadian users must also comply with the Canadian Electrical Code.

Use the charts below as a guideline to determine the proper conduit sizes for the GASBOY Series 8700Q dispensing unit. When planning the orientation of the wiring runs, follow the applicable GASBOY wiring diagram and consider the layout of the components at the site. Long runs or a large number of bends may require you to increase conduit size over what is listed.

THHN/THWN Wire Areas				
Gauge	Diameter		Area (Sq units)	
	in	mm	in	mm
18	.090	2.29	.007	4.1
16	.104	2.64	.009	5.5
14	.118	2.95	.011	6.8
12	.135	3.43	.014	9.2
10	.169	4.29	.022	14.5
8	.216	5.49	.037	23.7
6	.259	6.60	.053	34.2
4	.331	8.41	.086	55.5
3	.359	9.14	.102	65.6
2	.394	10.01	.122	78.7
1063A	.417	10.59	.137	88.4

Areas of Trade Size Conduit						
Trade Size	Int. Diameter		Area (Sq units)		Fill Area (sq units) 25% Fill	
	in	mm	in	mm	in	mm
1/2	.629	16	.303	196	.076	49
3/4	.826	21	.532	343	.133	86
1	1.063	27	.862	556	.215	139
1–1/4	1.378	35	1.50	968	.375	242
1–1/2	1.614	41	2.04	1314	.509	329
2	2.087	53	3.36	2165	.839	541

To determine conduit size needed, use the THHN/THWN Wire Areas table (left) to find the area for each wire gauge. Add up all wire areas. Use the Areas of Trade Size Conduit Table (right) to select the smallest number in the 25% fill area (based on NEC 501-1) that comes closest without exceeding the total wire area.

WIRING DIAGRAMS

The following pages contain wiring notes and wiring diagrams. Consult the appropriate wiring diagram for your pump/remote dispenser model and follow all notes.

Wiring diagrams are presented in numerical order. Wiring diagram 024214 has two diagrams: one for simultaneous operation of master and satellite and one for non-simultaneous operation. Be sure to use the correct one for your application.

NOTES:

1. All wiring and conduit runs must conform with all building/fire codes, all Federal, State, and Local codes, National Electrical Code, (NFPA 70), NFPA 30, and Automotive and Marine Service Station Code (NFPA 30A) codes and regulations.

2. When wiring pumps, for 115 VAC applications, motors can be wired as 230 VAC to reduce current draw. See breakaway view of **Optional 230 VAC Motor**. The selector switch should be set to the 230 V position. All other wiring should remain the same except for the addition of the L2 (requires 230 VAC breaker for control).

3. When wiring remote dispensers, submersible starter relays are always recommended when a submersible pump is used; however, the control circuit is capable of directly driving a submersible pump up to 1 HP at 115/230 VAC. Any pump over these ratings will require a submersible starter relay.

4. If using a satellite for fueling, see Weights and Measures Handbook 44 to determine which mode of satellite operation is relevant for your application. In many cases, the satellite must be wired so it cannot dispense product while the master remote dispenser is dispensing and vice versa. Use the correct wiring diagram according to your application.

5. If combining a remote dispenser with a fuel management system, the maximum HP limitation for directly driving a remote dispenser without the use of an additional relay or submersible starter must be the lower of the two components.

6. Use the wire size chart listed on page 4-3 when determining the wire size for the control wiring.

024212 WIRING DIAGRAM
Models: 8753QX

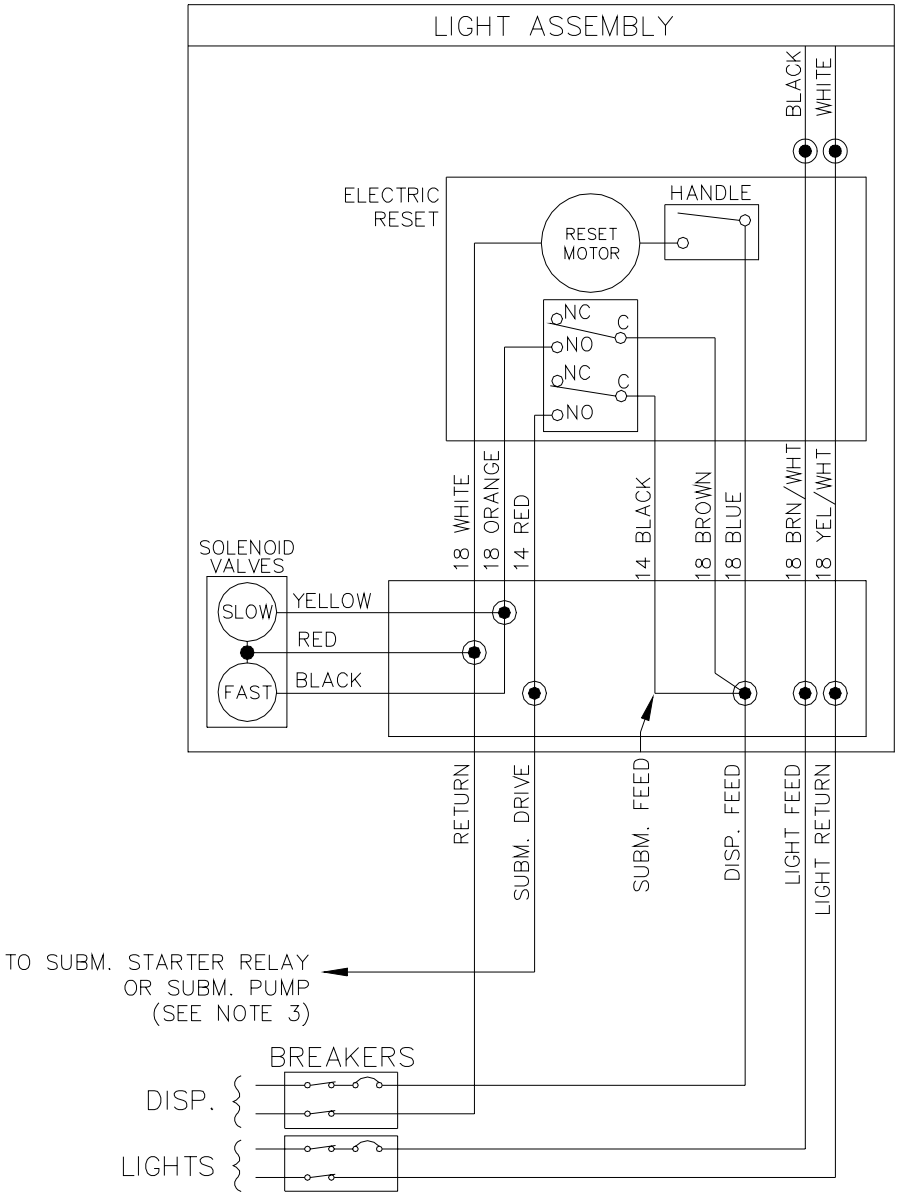

024213 WIRING DIAGRAM

Models: 8753QXTW1
8753QXTW2

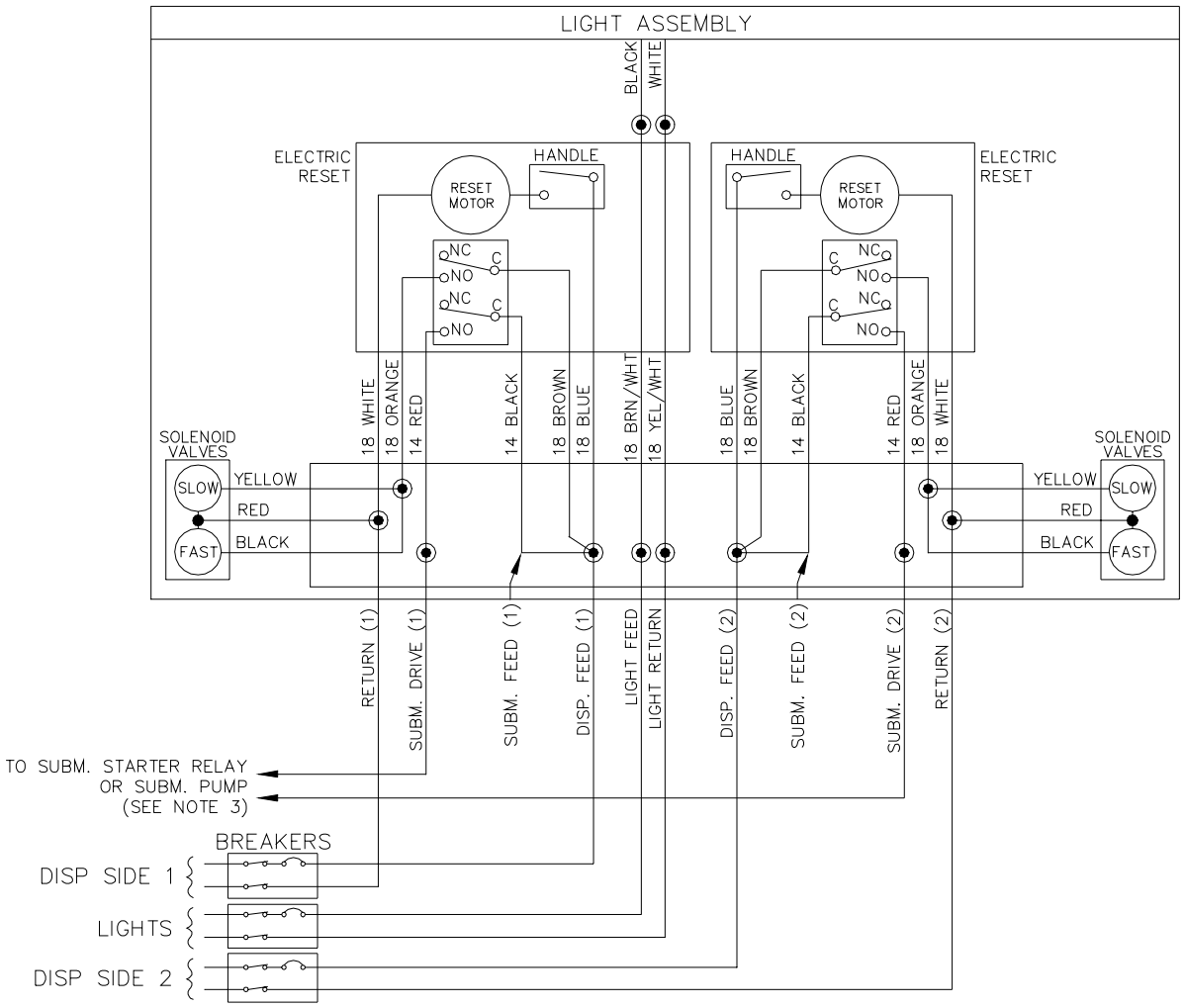

024214 WIRING DIAGRAM

Models: Satellite Island-Oriented Nozzle (side), 216A/8753QX

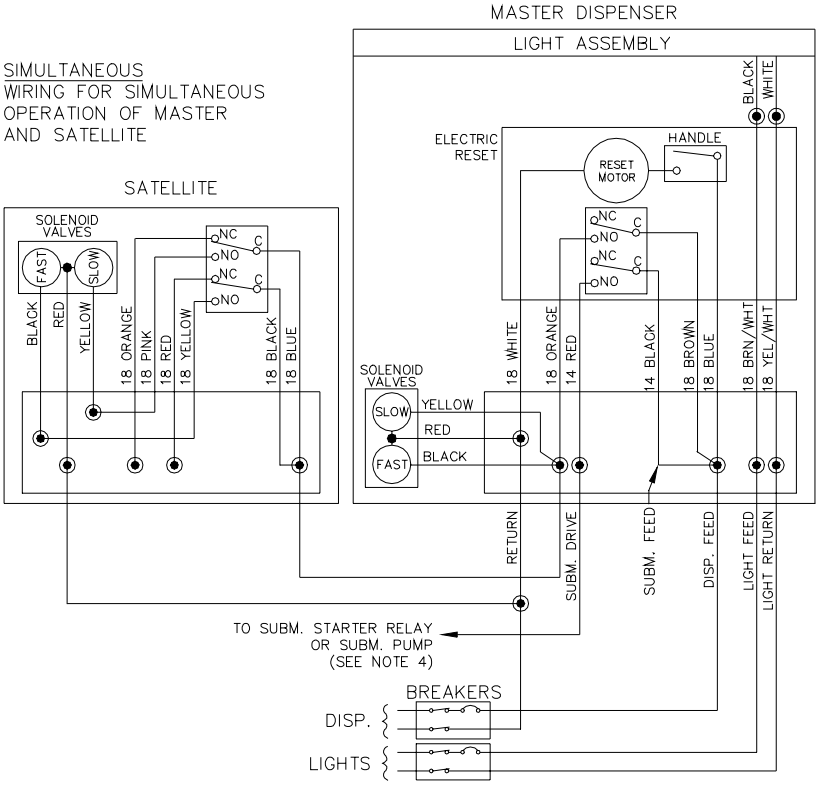

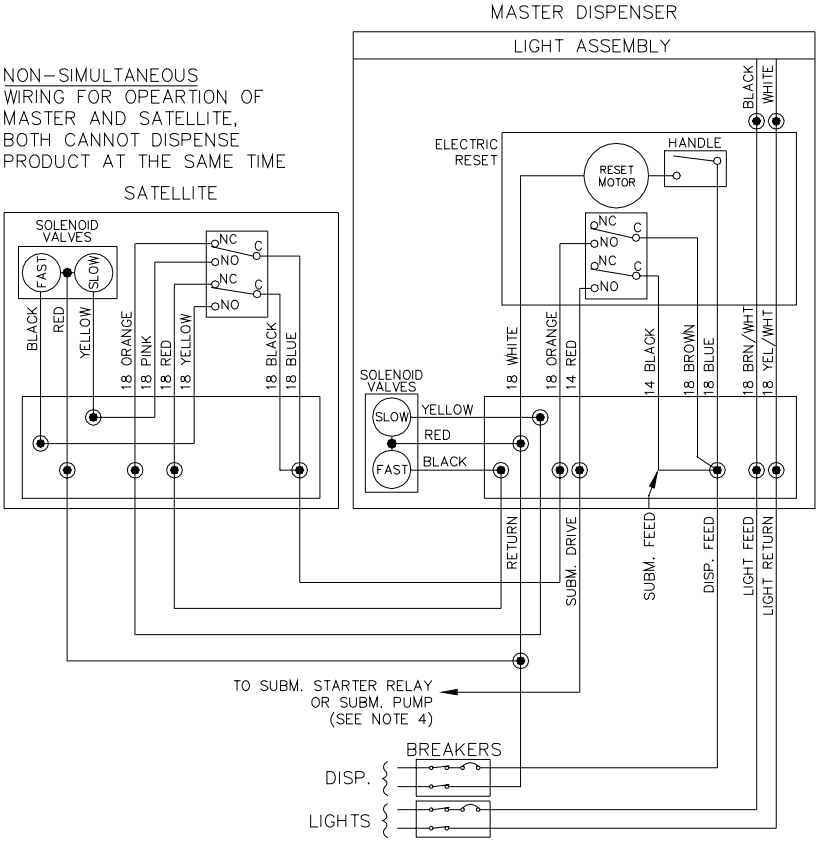

024222 WIRING DIAGRAM

Models: 8753QTW2
8753QTW1M

115/230 VAC WIRING

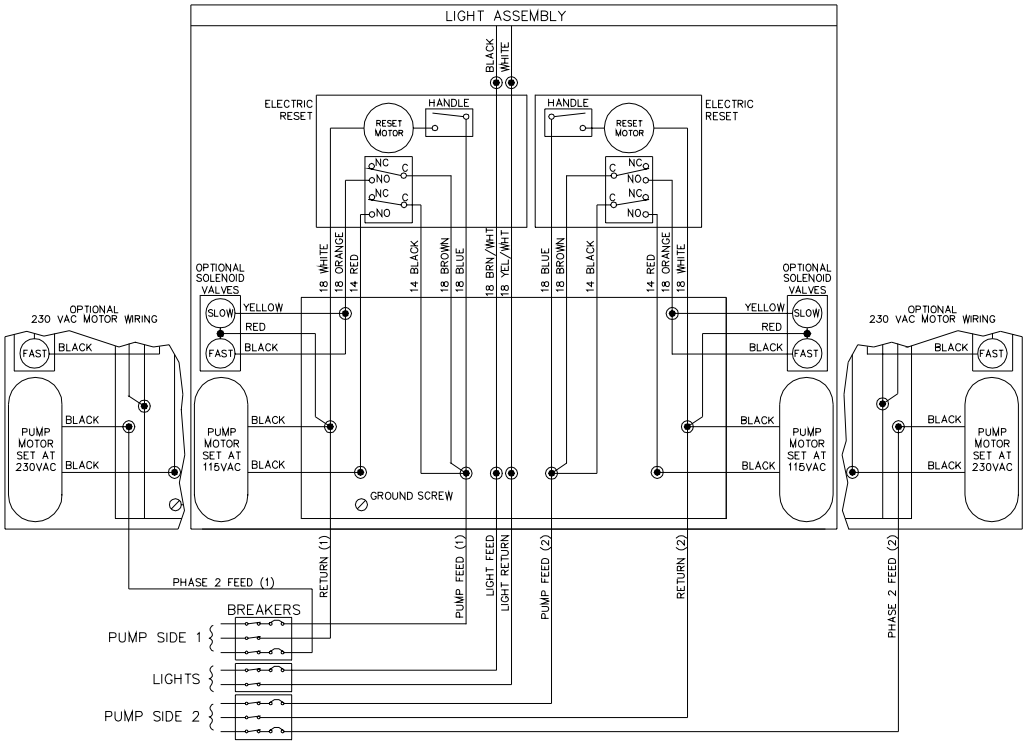

230 VAC WIRING (WARNING: ONLY FOR UNITS CONSTRUCTED SPECIFICALLY FOR 230VAC APPLICATIONS)

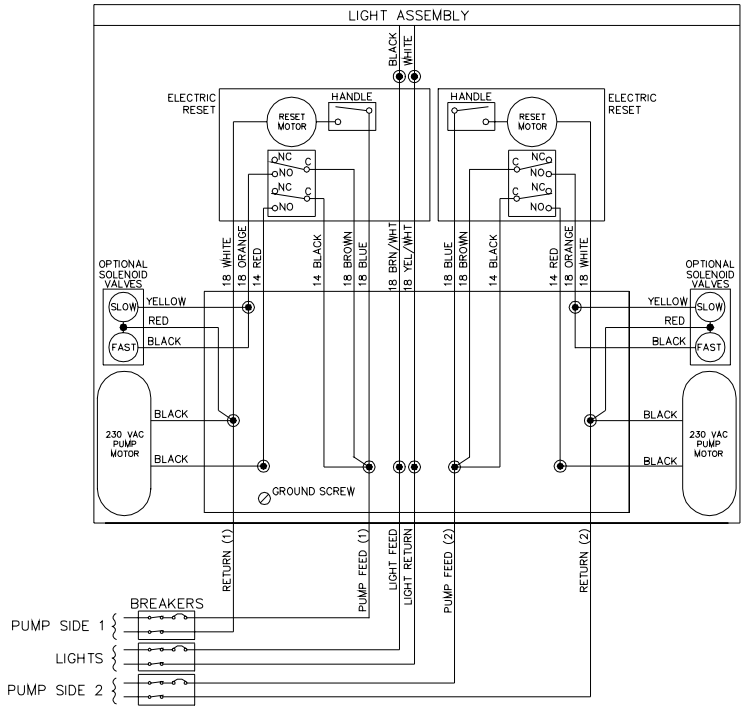

024223 WIRING DIAGRAM
Models: 8753QTW1

115/230 VAC WIRING

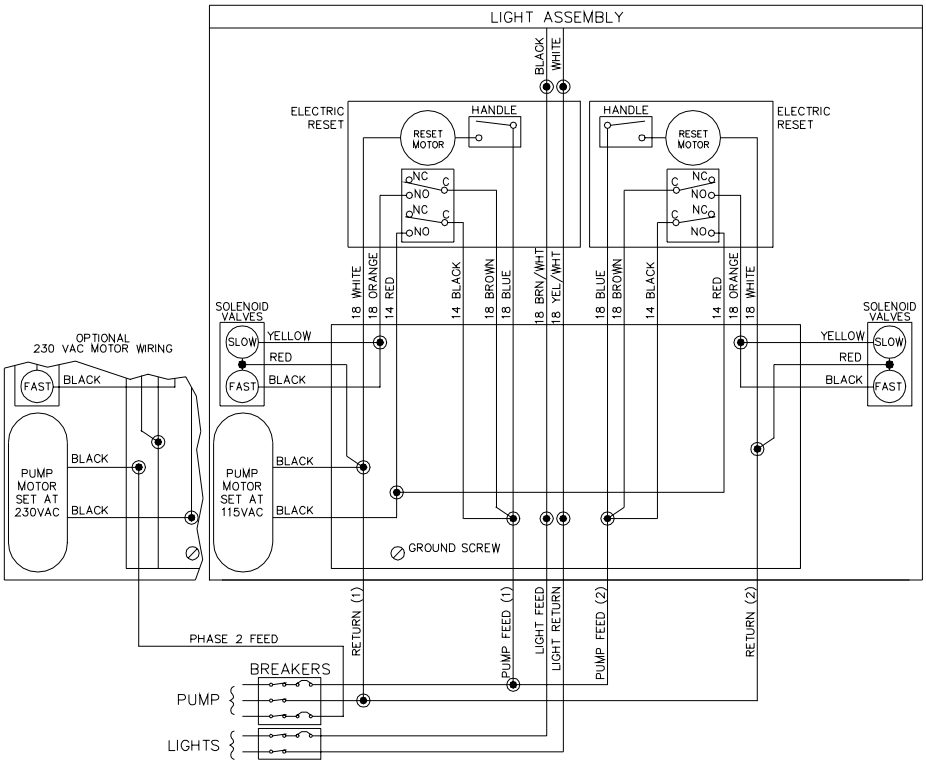

230 VAC WIRING (WARNING: ONLY FOR UNITS CONSTRUCTED SPECIFICALLY FOR 230VAC APPLICATIONS)

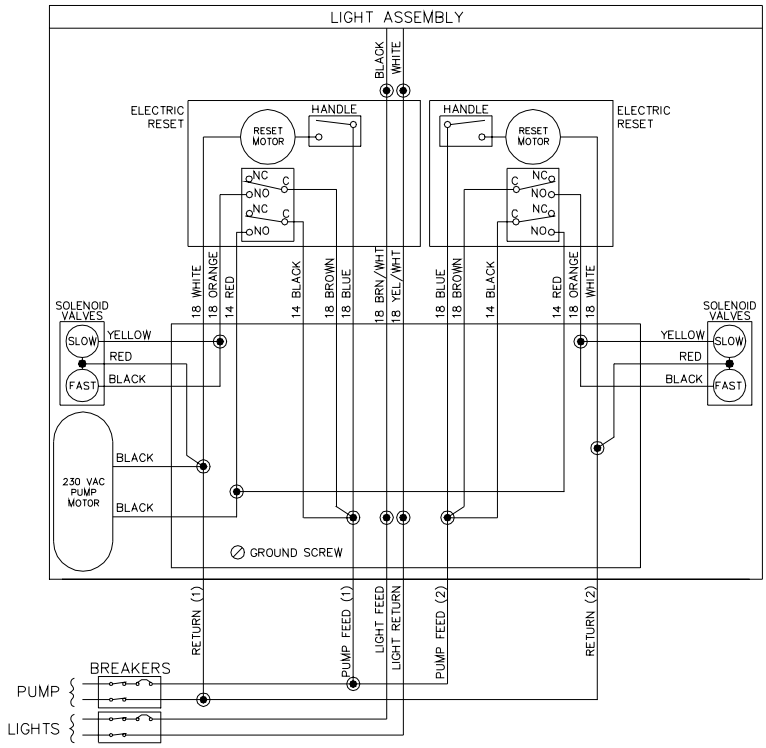

024224 WIRING DIAGRAM
Models: 8753Q

115/230 VAC WIRING

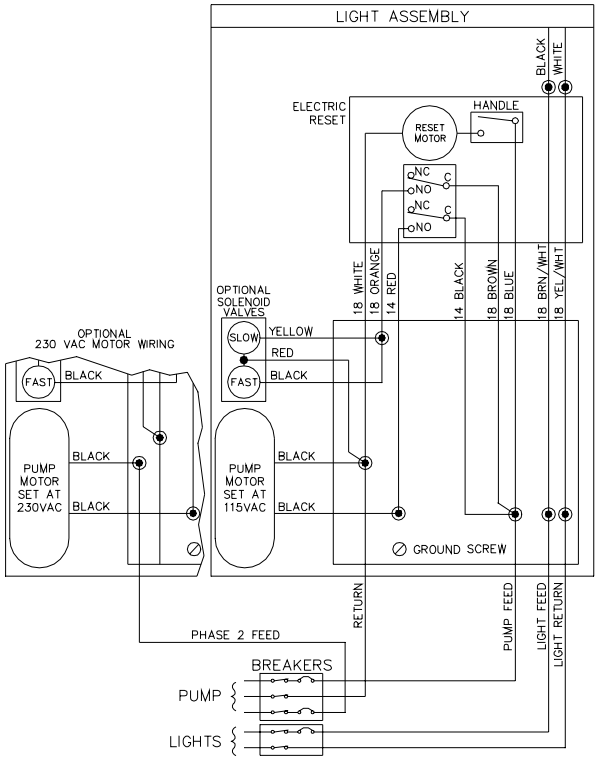

230 VAC WIRING (WARNING: ONLY FOR UNITS CONSTRUCTED SPECIFICALLY FOR 230VAC APPLICATIONS)

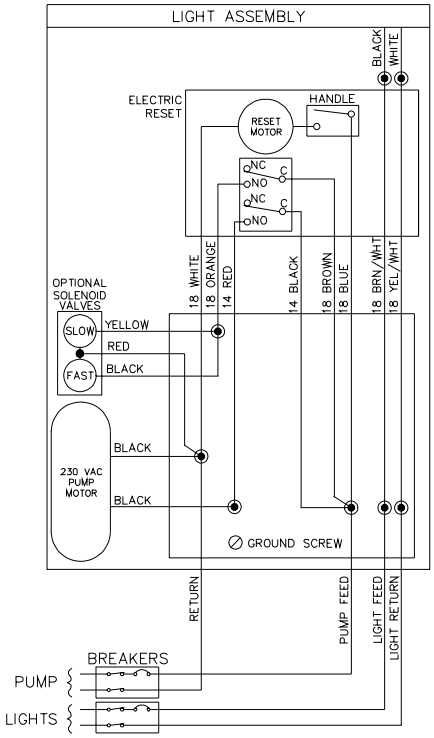

Section 5

PULSERS

GENERAL

A pulser is an optional device which is used when external monitoring of the dispensing unit operation is desired. The pulser transmits one electrical signal (pulse) for each predetermined amount of fuel dispensed. The signal is received by the external monitor (fuel management system) which keeps a running total of the quantity of fuel being dispensed during each transaction.

All Series 8700Q pulsers are operated with DC voltages. These pulsers include the reed pulser which outputs 10 pulses per unit of measure and the electronic pulsers which are available at 100 pulses per unit of measure. The pulser type should be selected according to the monitoring equipment, the application, and the regulations that must be met.

All Series 8700Q pulsers are driven by shafts or gears from the computer register. The EXTQTY shaft is the pulser drive most commonly used to meet requested pulser applications. This shaft is for quantity and does not turn during reset. The register offers another pulse drive which is seldom used by GASBOY. It is the RHQTY gear which is attached to the right hand quantity wheel which resets to the same position at the beginning of each transaction during the reset process.

WIRING

When installed in a separate DC conduit, 18 AWG wires are required for installation. Although it is recommended that DC pulser wires be run in a conduit separate from AC wires, they can be combined in the same conduit with AC wires providing UL-Listed cable with the following specifications is used:

Conductor:	18 AWG stranded wire. Number of conductors to be determined by pulser requirements.
Shield:	Foil-wrapped 100% coverage and/or tinned copper braid 90% coverage
Drain Wire:	Stranded, tinned copper, 20 AWG or larger/or braided shield
Voltage Rating:	Maximum operating voltage of 600V
Environmental:	Gas- and oil-resistant; suitable for wet or dry locations.

GASBOY can supply Belden 1063A (P/N C09655) which is a UL-Listed, 4-conductor cable that meets the requirements listed above. *NOTE: Belden 1063A is UL-Listed but not CSA listed.*

REED PULSERS

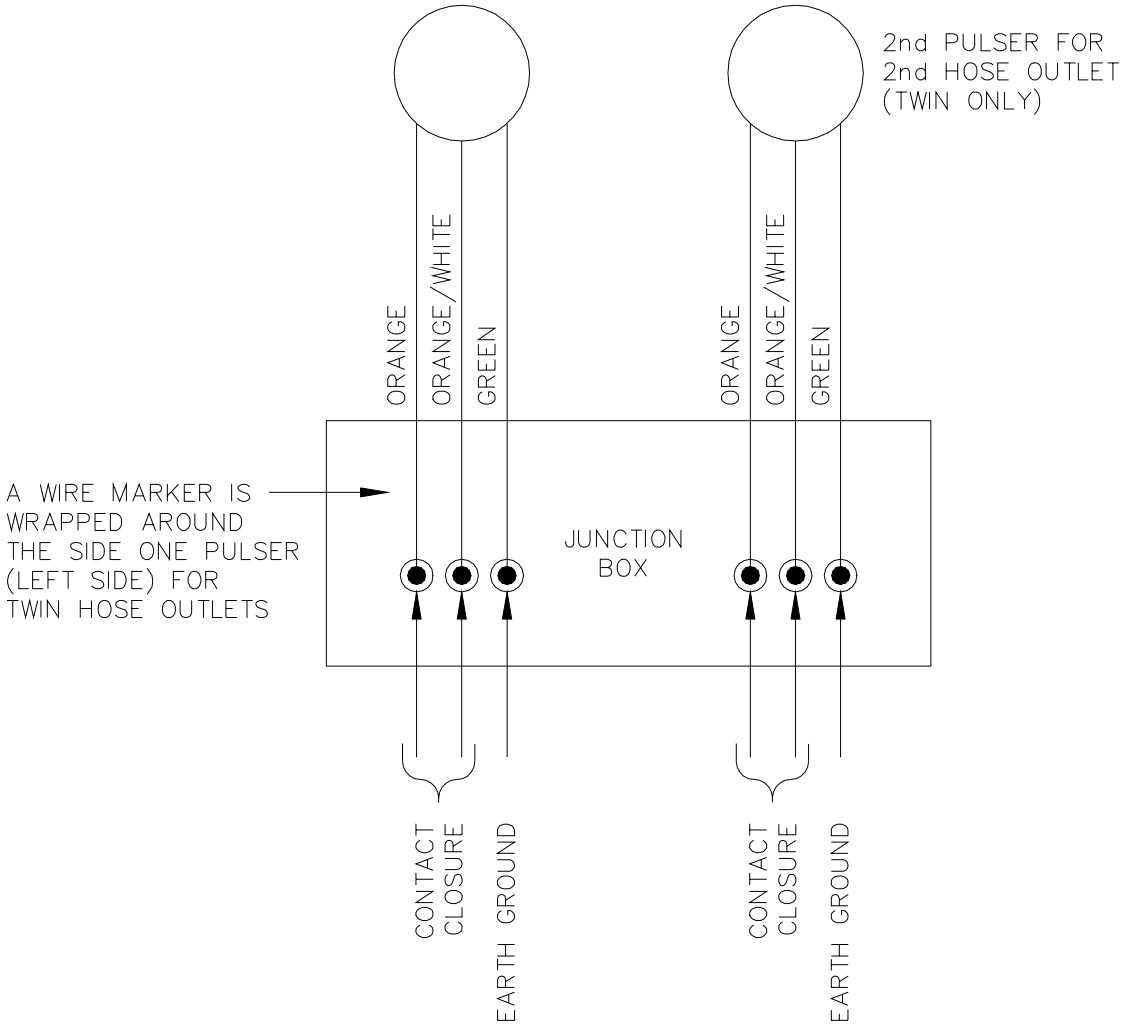

*NOTE: See **Pulser**, **Wiring** section for proper selection of pulser wires.*

ELECTRONIC PULSERS

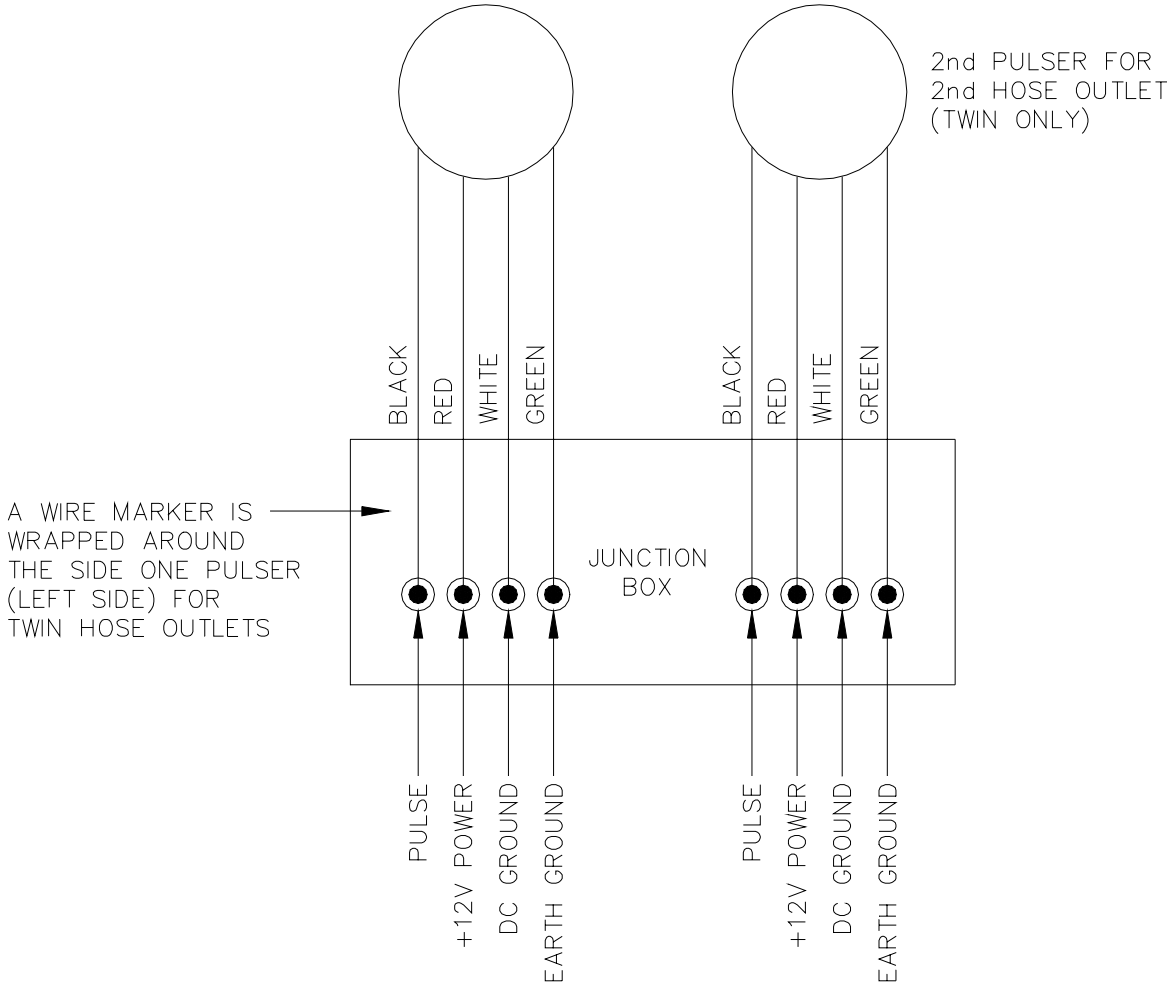

*NOTE: See **Pulser**, **Wiring** section for proper selection of pulser wires.*

Section 6

START-UP

COMPLETION CHECK LIST

The information below should be reviewed to help verify the proper installation of the Series 8700Q dispensing unit. **If the installation does not meet criteria listed, correct the problem before the start-up is performed.**

1. The unit must be properly secured to the island.

2. All plumbing must be complete and tight. **All liquid-carrying lines must be checked for leaks**.

3. When DC pulsers are used in the pump for connecting to GASBOY fuel management systems, AC and DC wires should not share any conduits, junction boxes, or troughs unless the restrictions outlined in the **Pulsers, Wiring** section are met.

4. All conduit work must be complete. All junction box covers must be secured. Conduits should not be sealed until the wiring is verified through proper operation.

5. The unit must be properly grounded.

6. Before any testing begins, remove any water in the tank through a fill opening, using a suitable pump. Do not use the GASBOY pump or remote dispenser and submersible pump to remove water. Serious damage may occur.

7. A sufficient volume of fuel must be put in the tank to insure that the liquid level is above the bottom of the suction pipe (suction pumps) or is high enough to allow the submersible pump to operate efficiently (remote dispensers).

START-UP

After successfully verifying the installation against the completion check list, the unit is ready for start-up. Follow the procedure listed below to perform an orderly start-up of the Series 8700Q dispensing unit.

1. Turn on the circuit breaker(s) for the various control lines to the unit.

2. Remove the nozzle for Side 1 from its holder and turn on the pump handle. Verify that the computer register goes through its reset sequence, which consists of the total volume and sale wheels resetting to all zeroes.

3. Dispense fuel. If the unit contains a slow/fast flow valve, verify that it opens. Check all plumbing for leaks at this time.

4. Turn the pump handle off. Open the nozzle. No fuel should be dispensed.

5. Dispensing units equipped with an optional light assembly, should have the light assembly tested to verify proper operation of the fluorescent light. The light control circuit may be wired from the pump breaker (reset motor feed) or from its own separate breaker. In either case, turn on the proper breaker and verify that the fluorescent light will light.

6. Repeat Steps 2, 3, and 4 for Side 2 (if applicable).

7. The dispensing unit should go through all standard calibration procedures. (See page 6-3).

POST START-UP TESTS

Voltage

The incoming voltage to the pump and remote dispenser should be checked and any reading not within 10% of rated voltage should be corrected before testing is continued. When dealing with suction pumps it is good practice to take voltage readings while the suction pump is operating on bypass and also while making a delivery. Any voltage drop in excess of 10% during either of these operating states should be considered a low voltage condition. Corrective action should be taken to insure an adequate power supply to the pump.

Tightness

After determining that the pump is operating satisfactorily and the system is fully primed, check the pump and piping to make sure that all connections are tight. In the case of a remote dispenser you should follow the submersible pump manufacturer's instructions to check the system for tightness. We recommend that the tank and all piping not be covered until this test has been completed.

Belts (Suction Pumps Only)

Since belts do stretch slightly during the first few minutes of operation, check the belt tension after completing the operational test.

The belt can be tightened by loosening the hex nut which holds the idler pulley and sliding the pulley to either side. Tighten belt sufficiently to reduce slippage, but avoid over-tightening,

Calibration

All GASBOY pumps and remote dispensers are adjusted for accurate measure at the factory. However, it is the responsibility of the installer to check the pump for accuracy, and make any needed adjustments. Where required, it is the owner's responsibility to report this device to the local Weights and Measures officials for their inspection before the unit is put into service.

Each meter is equipped with a mechanism for calibration, located on the side of the meter. To adjust the volume dispensed:

1. Check meter registration by delivering product to a reliable, accurate, 50 or 100 gallon prover.
2. Remove the seal wire from the locking pin.
3. Remove locking pin and turn wheel to adjust measurement. Turn clockwise to decrease the amount in the prover to match the display, turn counter-clockwise to increase the amount in the prover to match the displayed. Moving the wheel one hole position changes the calibration by 2/3 cubic inch per 5 gallons. To change by half of this amount, you may utilize the alternate locking pin hole on the opposing side of the calibration wheel.
4. Repeat process until volume in prover and amount recorded are within tolerance.
5. After calibration is complete, reinstall locking pin and secure in place using a seal wire.

POWER RESET EXTERNAL ADJUSTMENT

If the pump or remote dispenser fails to reset or shut off properly, the power reset may need to be adjusted. To adjust:

1. Loosen the lock nut on adjusting screw and back screw out until it stops.

2. Move reset lever to ON position.

3. Turn adjustment screw in until reset motor starts. Advance adjustment screw an additional ½ to ¾ turn and tighten lock nut.

4. Turn reset lever to OFF, then back to ON to check proper operation. (Reset coupling should make one revolution and stop).

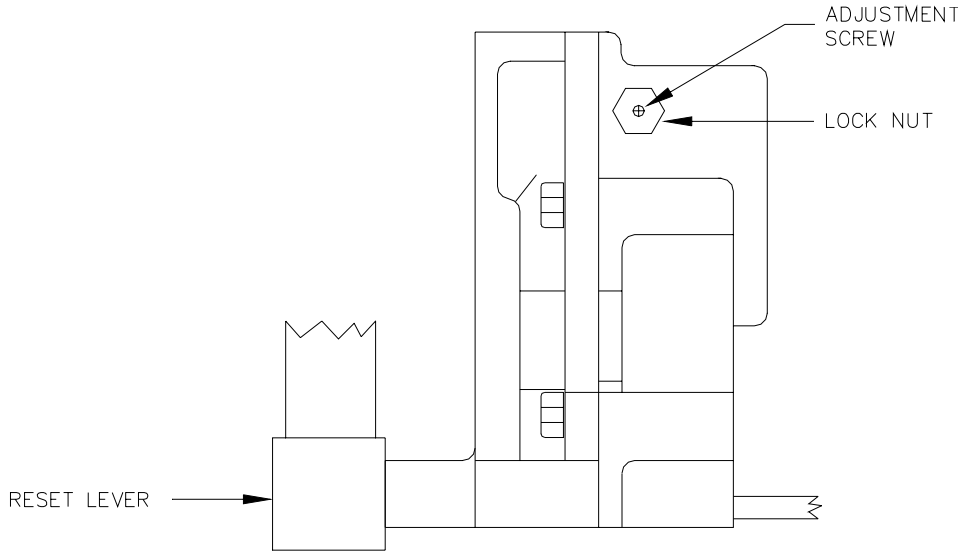

CHANGING THE PRICE

1. Unlock and remove the front panel. Repeat this procedure for the other side.

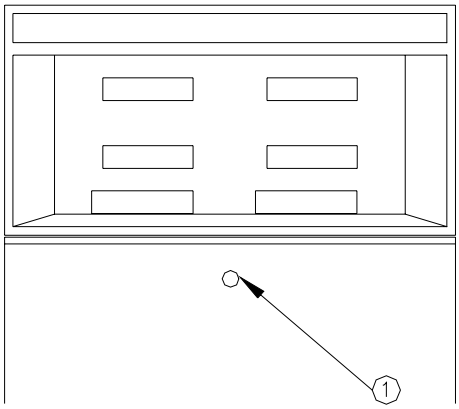

2. The variator section of the computer register(s) is exposed to allow for price changes. Slide the variator cover of the computer register apart to expose the price range arms.

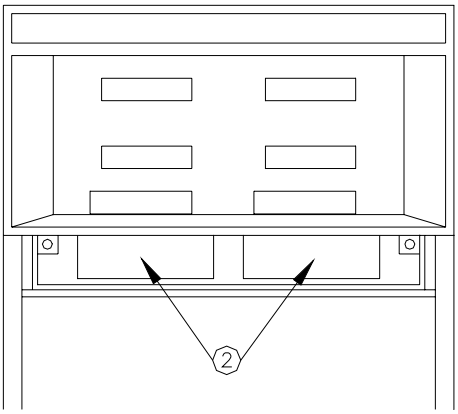

3. There are 3 range arms located in the variator section. One sets the tenths of a cent position, one sets the one cent position and the last one sets the ten cents position. To change a setting, grasp a range arm and raise it to clear the range arm locator, and relocate the range arm to the desired setting. Assure the range arm is totally bottomed on its setting. Repeat this for all range arm settings if necessary.

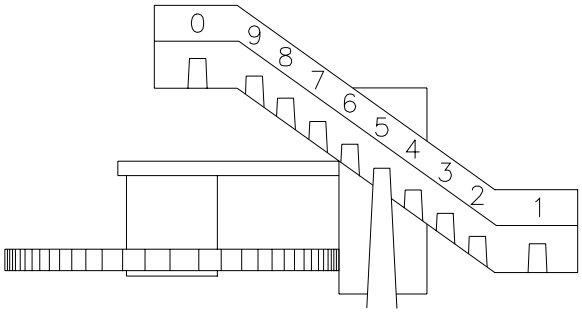

4. To change the dollar setting, locate the lever control which is located above the variator section on the same level as the price display. There are 3 available positions: 0.00, 1.00, 2.00. Remove the cotter pin, grasp the lever and raise it slightly to clear the position locators. Position the lever to the desired setting and release. Reinsert the cotter pin through the lever and plate. Note - If the lever will not move to the desired position, rotate the right hand money wheel until the lever is free to move.

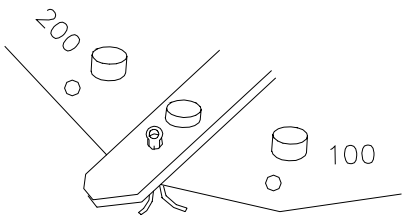

5. If you have difficulty reaching the dollar shift lever when changing prices, remove the two cap screws located over the tabs of the bezel assembly. Lift the bezel assembly upward and remove it from the unit. When reattaching the bezel to the dispensing unit, be sure the top inner edge of the bezel assembly slides into the U-shaped channel located on the upper edge of the dispensing unit.

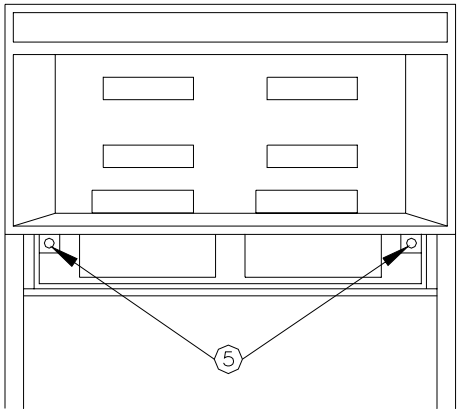

Section 7

OPERATING SEQUENCE

PUMP

1. AC Power (115 VAC/230 VAC Int'l) must be provided to the pump motor feed and reset motor feed (slow flow/reset motor feed if applicable).
2. When the pump handle is turned on, power (115 VAC/230 VAC Int'l) is supplied to the electric reset motor which immediately begins to reset the values on the pump computer register to zero. If pump fails to reset properly, see Section 6, **Power Reset External Adjustment**.
3. When the reset is complete, power is removed from the reset motor and the internal switches in the reset unit change to the normally open contacts. This supplies power (115 VAC/230 VAC Int'l) to the pump motor and to the reset complete line. If this pump contains a slow flow/fast flow or closure type solenoid valve, the valves will open at this time.
4. The user begins to dispense product.
5. The register displays the total volume. If an optional pulser kit is attached, it will be supplying pulses which may be recorded by an external monitoring system.
6. The fueling transaction continues to run until the user turns off the pump handle. If pump fails to shut off properly, see Section 6, **Power Reset External Adjustment**.

REMOTE DISPENSER

1. AC power (115 VAC/230 VAC Int'l) must be provided to the submersible feed and slow flow/reset motor feed. If a submersible starter relay is used, AC power (115 or 230 VAC) must be supplied to the input contacts of the submersible starter relay.
2. When the pump handle is turned on, power (115 VAC/230 VAC Int'l) is supplied to the electric reset motor which immediately begins to reset the values on the pump computer register to zero. If remote dispenser fails to reset properly, see Section 6, **Power Reset External Adjustment**.
3. When the reset is complete, power is removed from the reset motor and the internal switches in the reset unit change to the normally open contacts. This supplies power (115 VAC/230 VAC Int'l) to the submersible starter relay, which in turn closes and supplies power to the submersible motor. If a starter relay is not used, the hot leg is supplied directly to the submersible motor. The remote dispenser will contain a slow flow/fast flow or closure type solenoid valve, which will open at this time. At the same time the valve opens, the Reset Complete line will go to 115 VAC/230 VAC Int'l.
4. The user begins to dispense product.
5. The register displays the total volume. If an optional pulser kit is attached, it will be supplying pulses which may be recorded by an external monitoring system.
6. The fueling transaction continues to run until the user turns off the pump handle. If remote dispenser fails to reset properly, see Section 6, **Power Reset External Adjustment**.

Section 8

PREVENTIVE MAINTENANCE

GENERAL

GASBOY pumps and remote dispensers are designed and constructed to give many years of uninterrupted service. In fact, hundreds of operators report years of trouble-free operation with absolutely no service expense. Yet, certain parts of a pump are bound to wear, and GASBOY therefore recommends a periodic inspection, at least twice a year, for such things as fuel leaks, belt tension and condition, lubrication and strainer cleanliness. If such a procedure is followed, any small adjustments that are necessary can be made before expensive, annoying breakdowns occur. The result of this sound approach is continuous, profitable service from all of your GASBOY equipment.

Procedures requiring disassembly of portions of the pump/remote dispenser must be performed by qualified service personnel.

WARNING:
To reduce the risk of electrical shock when servicing, turn off all power to the pump/remote dispenser. In submersible pump applications turn off power to the submersible pump and any other remote dispensers which use that submersible pump. AC power can feed back into a shut-off remote dispenser when dispensers share a common submersible pump or starter relay. Always turn off all power to the remote dispenser and submerged pumps at the master panel and close any impact valve before performing any maintenance or service to the remote dispenser, including the changing of any fuel filters or strainers. Also block islands so no vehicles can pull up to the remote dispenser when the dispenser is being worked on.

HINTS FOR BETTER PUMP PERFORMANCE

Demand Competent Service

If your pump should stop or fail to operate properly, don't depend upon the repair service of a general mechanic unless he is thoroughly familiar with the mechanism. Experience shows that the repair results will be much more satisfactory if you demand the service of a competent representative of the pump manufacturer. GASBOY has a distributor network which services fuel dispensing and management systems in every section of the country.

Use Authorized Parts

Should excessive wear, rust, or corrosion of parts cause inefficient operation, it is always best to replace them immediately; but if you want the best results and continuity of the Underwriters' Label on your pump, be sure they are new authorized service parts supplied by GASBOY. Every part of a pump or remote dispenser is carefully designed for a particular purpose. If it is replaced by an incorrect or substandard substitute, pump operation will be unsatisfactory. Always use new gaskets or seals when servicing or rebuilding Gasboy equipment; do not re-use old ones.

Operate with Reasonable Care

Like any machine, the pump or remote dispenser that is operated with reasonable care will last longer and give better service. Abuse should be avoided (such as dropping the nozzle on the ground, operating the unit with a dirty strainer, dragging the hose across the concrete island or driveway, running the pump with the nozzle closed for more than two minutes, etc.). The time and care given to your pumps will be returned to you in the form of dependable service.

PREVENTIVE MAINTENANCE CHECK LIST

Keep Water Out

Water tends to collect in underground and above ground storage tanks. This is due to moisture-laden air being drawn into the storage tank and condensing, or to defective fill openings that are not properly protected with watertight covers. Storage tanks should be checked after every fill-up for water and removed with a sump pump, to forestall serious damage to equipment. Water, sediment, and other foreign matter that accumulates in the tank can be drawn up into the pump or remote dispenser and cause failures.

Hose Retrievers (If Applicable)

The cable reel assembly does not require lubrication but the cable should be checked periodically and replaced when it appears worn or frayed.

Keep the Non-Computer Lubricated

Although the non-computers used in GASBOY pumps are carefully adjusted and lubricated at the factory before shipment, they require (as do all mechanical parts) occasional cleaning and lubrication when in service. The intervals at which this should be done vary with conditions of operation, but under normal conditions it is necessary only twice a year, or after each 100,000 gallons delivered.

Turn off the AC power to the pump. It's easier to clean and oil the non-computer if you remove it from the pump. Clean the non-computer with compressed air and wipe all accessible parts (such as figure wheel drums) with a clean cloth. *NOTE: Always wear protective safety goggles or glasses when using compressed air.* Never use solvents, such as gasoline or kerosene, as this will become trapped in many of the inaccessible bearings and dissolve the new lubricant when it is applied.

A light, non-acid type oil (SAE 10) is recommended because this gives maximum protection in varying temperatures. The oil must also be acid-free so that it will not cause corrosion of the cast metal parts. A long handled, fine lettering brush is very convenient for applying the oil to all bearings and shafts and for applying light, nonfluid oil (grease with body similar to that of chassis lubricant) to the bevel type gears.

Dial Face

Clean the dial face with a soft, clean, damp cloth as often as necessary.

Cleaning the Strainer

Clean the strainer immediately after the pump has been installed and tested, and again after a few hundred gallons have been delivered. Thereafter, once every six months, or as required.

The symptoms of a dirty or clogged strainer in a pump are slow delivery, noisy operation, and pulsation. Before starting, close the 10RU safety shutoff valves under each pump you are working on. Then follow these directions:

Pump: Turn off AC power to the pump. Remove the triangular- shaped Suction Strainer Cover, located on the pulley side of the pump. Inspect cover O-Ring for damage. Carefully remove debris from strainer cavity in the pump and use compressed air to blow the dirt out of the strainer.

Remote dispenser: Turn off AC power to the dispenser, submersible pump, and any other dispensers which use that submersible pump. Locate and remove the Strainer Cap. Carefully remove debris from strainer cavity in the strainer casting and use compressed air to blow the dirt out of the strainer.

NOTE: Always wear protective safety goggles or glasses when using compressed air.

Filter

If the unit is equipped with a filter, check and change it at regular intervals. A dirty filter in a pump or remote dispenser will cause a slower delivery rate. Refer to the accessories section of your parts manual to ensure that you replace the filter with one designed for your model. Always use a drip pan directly below the filter when removing the cartridge to prevent contamination of both the soil and the electrical components within the cabinet.

Adjusting the Belts - Suction Pumps Only

With the proper care, belts will give exceptionally good service. A loose belt not only cuts down dispensing speed, due to slipping, but also results in excessive wear. The belt can be tightened by loosening the hex nut which holds the idler pulley and sliding the pulley to either side to obtain the correct belt tension. Tighten belt sufficiently to reduce slippage, but avoid overtightening.

Preserve the Finish of Your Pumps

Nearly all gasoline pumps are installed outdoors where their surfaces are subjected to the action of the weather. As a result, it is necessary to give the finish a reasonable amount of care if an attractive appearance is to be maintained.

The finish on GASBOY pump housings is a UL-approved, oven-cured, 2-part polyurethane. The life of this finish can be lengthened several years if, at regular intervals, the painted surfaces are thoroughly cleaned with a high grade automobile polish and then protected with a coat of paste wax. Do not use abrasive cleaners or polish. Do not use high pressure spraying equipment.

In order to retain the unmarked finish on stainless steel, occasional cleaning is required. In corrosive atmospheres, such as coastal areas, a more frequent cleaning schedule is necessary. Under ordinary conditions, washing with detergent or soap and water, followed by a clean water rinse, is sufficient. If hard water is used, the surface should be wiped dry with a soft clean cloth to prevent the formation of water spots. Marks or spots, such as grease, oily fingerprints and

smudges which resist soap and detergents, will have to be removed with a stronger cleaner. (**DO NOT** use ordinary steel wool as iron particles may adhere to the surface and cause corrosion.) Care should be taken in choosing a cleaner because any cleaning compounds or powders which contain abrasives can scratch a mill-rolled finish. Care must be exercised in their use to run in the direction of the polishing lines in the steel, never across them. After cleaning, an application of paste wax is recommended to protect the surface and prolong the interval between cleaning.

WARRANTY

General Statements:

Gasboy International LLC. warrants all new equipment manufactured by Gasboy against defective material and/or workmanship, for the warranty period specified below, when the equipment is installed in accordance with specifications prepared by Gasboy.

This warranty does not cover damage caused by accident, abuse, Acts of God, lack of surveillance of automatic recording systems, negligence, mis-application, faulty installation, improper or unauthorized maintenance, installation or use in violation of product manuals, instructions, or warnings. Under no circumstance shall Gasboy be liable for any indirect, special, or consequential damages, losses, or expenses to include, but not limited to, loss of product, loss of profits, litigation fees, or the use, or inability to use, our product for any for any purpose whatsoever.

Parts Only - During the warranty period, Gasboy will, at its option, repair or replace defective parts returned transportation prepaid to its factory.

On-Site Labor Included - Gasboy will also provide, within the Continental United States and during the warranty period, the services of an Authorized Service Representative (ASR) for on-site repair or replacement of defective parts.

Replacement Parts - Any system components that are not part of the original system order, including Island Card Readers, Pump Control Units, etc., are considered replacement parts.

Equipment	Term	Coverage
Commercial Pumps and Dispensers Full-Cabinet Consumer Pumps	One year from date of installation or 18 mos. from date of Gasboy International's invoice to the purchaser, whichever comes first.	Parts and Labor.
Small Transfer Pumps, Meters, Pressure Regulators	One year from date of installation or 18 mos. from date of Gasboy International's invoice to the purchaser, whichever comes first.- Excepting the Model 2020 Hand Pump, which has a 90-day warranty from date of GASBOY International's invoice.	Parts Only.
Keytrol	One year from date of installation or 18 mos. from date of Gasboy International's invoice to the purchaser, whichever comes first.	Parts and Labor.
Fuel Management Systems: - CFN/ Profit Point - Series 1000/Fleetkey - TopKAT - Fuel Point Readers (sold with new systems)	One year from date of start-up or 15 mos. from date of Gasboy International's invoice to the purchaser, whichever comes first.- The basic warranty only applies to systems which have been started up by a Gasboy Authorized Service Representative (ASR).	Parts and Labor.
Additional Fuel Point Items: - Fuel Point Readers sold for retrofitting existing systems. - Fuel Point vehicle and dispenser components.	One year from date of start-up or 15 mos. from date of Gasboy International's invoice to the purchaser, whichever comes first.	Parts Only.
Encoders, Embossers, Modems, CRTs, and Logger Printers	Purchased with Fuel Management System (Encoders, Embossers only): 90 days from the date of start-up by a Gasboy ASR, or 180 days from date of Gasboy International's invoice, whichever occurs first. Purchased with Fuel Management System (Modems, CRTs, and Logger Printers only): Matches system warranty. Purchased Separately: 90 days from date of Gasboy International's invoice to the purchaser.	Purchased with System (Encoders, Embossers only): Parts only. Purchased with System (Modems, CRTs, Logger Printers only): Matches system warranty. Purchased Separately: Parts Only.
Air Diaphragm Pumps	Three years from date of purchase (for full warranty description, see Price List).	Parts Only.
Items not manufactured by Gasboy (ex. automatic nozzles, hoses, swivels, etc.)	Not warranted by Gasboy International (consult original manufacturer's warranty).	Not Applicable.
Replacement Parts	One year from date of Gasboy International's invoice to the purchaser.	Parts Only.

To the extent permitted by law, this warranty is made in lieu of all other warranties, expressed or implied, including warranties of freedom from patent infringement, or merchantability, or fitness for a particular purpose, or arising from a course of dealing or usage of trade. No one is authorized to vary the terms of the warranty nor may anyone make any warranty of representation, or assume any liability other than that herein stated, in connection with the sale described herein. The acceptance of any order by Gasboy International is expressly made subject to the purchaser's agreement to these conditions.

GASBOY INTERNATIONAL LLC
P.O. Box 309, Lansdale, PA 19446 • (800) 444-5579 • FAX: (800) 444-5569 ••www.gasboy.com