SERIES 9800Q
PUMPS/DISPENSERS
PARTS LIST

038727

Rev. 12/10/03

Copyright 2003 by Gasboy International LLC All rights reserved.
The information in this document is confidential and proprietary. No further disclosure shall be made without permission of Gasboy International LLC. Gasboy International LLC believes that the information in this document is accurate and reliable. However, we assume no responsibility for its use, nor for any infringements of patents or other rights of third parties resulting from its use. We reserve the right to make changes at any time without notice.

GASBOY INTERNATIONAL LLC LANSDALE, PA

IMPORTANT WARNINGS AND SAFEGUARDS

Gasoline and petroleum products are flammable. To avoid injury or death to persons or damage to equipment or property, follow these listed warnings and other warnings and precautions outlined in this manual when installing, using, or working around this equipment. Check with GASBOY Technical Services for compatibility of liquids with pump materials.

TURN OFF AND LOCK OUT ALL POWER TO PUMP BEFORE PERFORMING SERVICE, MAINTENANCE OR IN THE EVENT OF A FUEL SPILL.

All products must be installed by a qualified installer and used in conformance with all building, fire, and environmental codes and other safety requirements applicable to its installation and use, including, but not limited to, NFPA 30, NFPA 30A, NFPA 395 & NFPA 70. A qualified installer is familiar with fuel systems installations under the above stated building, fire, and environmental codes and other safety requirements for the particular type of installation.

This product is only part of a fuel dispensing system and additional equipment and accessories, such as, but not limited to, breakaway connectors, shear valves, pressure regulators, flow limiters, and other safety devices may be necessary to meet the applicable codes.

For maximum safety, we recommend that all employees be trained as to the location and procedure for turning off power to the entire system. Instructions regarding proper operation of the equipment along with the appropriate safety warnings should be posted in plain view at the fuel island.

Before performing service or maintenance (including changing of fuel filters or strainers) or in the event of a fuel spill, turn off and lock out all power to the system. In battery-powered pumps, disconnect power source. In submersible pump applications, turn off and lock out power at the master panel and close any impact valves to the submersible pump and any other dispensers which use that submersible pump. AC power can feed back into a shut-off dispenser when dispensers share a common submersible pump or starter relay. Also block islands so no vehicles can pull up to the dispenser when the dispenser is being worked on.

DO NOT use Teflon tape for any pipe threads in the product.

DO NOT use consumer pumps for pumping fuel or additives into aircraft.

DO NOT use commercial pumps for direct fueling of aircraft without filters and separators necessary to ensure product purity.

DO NOT use where sanitary design is required (for food products for human consumption) or with water-based liquids.

DO NOT smoke near the pump or when using the pump.

DO NOT use near open flame or electrical equipment which may ignite fumes.

DO NOT permit the dispensing of gasoline or other petroleum products into a vehicle with its motor running.

DO NOT permit the dispensing of gasoline or other petroleum products into unapproved containers or into approved containers in or on vehicles including trucks. All containers must be filled on the ground to prevent static discharge. Always use Approved and Listed hoses and nozzles with electric pumps and dispensers.

DO NOT block open the nozzle in any manner. Nozzles shall conform to UL and NFPA code requirements for attended or unattended service.

DO ensure that the pump is equipped with proper filters based on the product being dispensed and its intended use.

DO wear safety goggles and protective clothes when dispensing any liquid which may be potentially harmful or hazardous.

DO keep all parts of body and loose clothing clear of belts, pulleys, and other exposed moving parts at all times.

DO require washing and changing of clothes if fuel is spilled on a person or his/her clothing. Keep away from open flames, sparks, or people smoking.

DO provide a receptacle for catching product from pump/meter when servicing.

DO clean up product spills on the driveway. Turn off and lock out all power prior to cleanup.

DO insure pump is properly grounded.

DO insure hose is compatible with fluid being dispensed.

DO inspect hose, nozzle, and pump on a regular basis for wear, damage, or other conditions which may create a safety or environmental hazard.

DO make sure all pipe threads are properly cut and the inside reamed to remove burrs. Use UL classified gasoline-resisting compound on all joints of gasoline handling piping. Sealing compound must also be resistant to Gasohol (Ethanol and Methanol). Use gasoline-resistant pipe compound on male threads only; pipe compound used on female threads can be squeezed into the supply line where it can enter the product stream and become lodged in the pump or meter.

DO ensure that junction box covers are in place and properly tightened. Mating surfaces between the box and cover must be free of dirt, nicks, and scratches. All unused entries into the junction box must be properly plugged.

GASBOY INTERNATIONAL LLC
707 North Valley Forge Rd. Lansdale, PA, 19446 ● (215) 855-4631 ● FAX: (215) 855-0341

CONTENTS

Using This Parts List 1
Top Cover, 9800Q/QX, 9840Q/QX, 9800QTW 2
Panel Module, 9800Q 3
Panel Module, 9800Q Front Load 4
Panel Module, 9800Q, Internal Retriever 5
Panel Module, 9800Q, Front Load, Internal Retriever 6
Panel Module, 9800QTW 7
Panel Module, 9800QTW Front Load 8
Panel Module, 9800QTW Internal Retriever 9
Panel Module, 9800QTW Front Load Internal Retriever 10
Dial Enclosure Assembly, 9800Q Single, 9840Q, 9840QX 11
Dial Enclosure Assembly, Twin 12
Frame Module, All Models 13
Dispenser Module, 9800QXTW2 15
Dispenser Module, 9800QXTW1, 9840QX 17
Dispenser Module, 9800QX 19
Discharge 9840Q/QX With Solenoid Valve, 097617-115V; 097636-230V 20
Discharge 9840QX w/Solenoid Valve & Satellite Pipe 115V/230V, 097619-115V; 097637-230V 21
Discharge, 9852Q w/Solenoid Valve, 097612-115V; 097631-230V 22
Discharge, 9852Q w/Filter & Solenoid Valve, 097611-115V; 097630-230V 23
Discharge, 9852QTW2 w/Solenoid Valve, 097604-115V; 097623-230V 24
Discharge, 9852QXTW w/Solenoid Valve & Satellite Pipe, 097608-115V; 097627-230V 25
Discharge, 9852QTW2 w/Filter & Solenoid Valve, 097603-115V; 097622-230V 26
Discharge, 9852QXTW2 w/FIlter, Solenoid Valve, Satellite Pipe, 097607-115V; 097626-230V 27
Discharge, 9852QX w/Solenoid Valve & Satellite Pipe, 097616-115V; 097635-230V 28
Discharge, 9852QX w/Filter, Solenoid Valve, Satellite Pipe, 097615-115V; 097634-230V 29
Discharge, 9853Q w/Solenoid Valve, 097610-115V; 097629-230V 30
Discharge, 9853Q w/Filter & Solenoid Valve, 097609-115V; 097628-230V 31
Discharge, 9853QX w/Solenoid Valve & Satellite Pipe, 097614-115V; 097633-230V 32
Discharge, 9853QX w/Filter, Solenoid Valve, Satellite Pipe, 097613-115V; 097632-230V 33
Discharge, 9853QTW2/1M w/Solenoid Valve, 097602-115V; 097621-230V 34
Discharge, 9853QTW2/1M w/Filter & Solenoid Valve, 097601-115V, 097620-230V 35
Discharge, 9853QXTW w/Solenoid Valve & Satellite Pipe, 097606-115V; 097625-230V 36
Discharge, 9853QXTW w/Filter, Solenoid Valve, Satellite Pipe, 097605-115V; 097624-230V 37
Discharge 9840Q, 097596 38
Discharge, 9852Q, 097572 39
Discharge, 9852Q w/Filter, 097571 40
Discharge, 9852QTW2, 097560 41
Discharge, 9852QTW2 w/Filter, 097559 42
Discharge, 9853Q, 097554 43
Discharge, 9853Q W/Filter, 097553 44
Discharge, 9853QTW2/1M, 097549 45
Discharge, 9853QTW2/1M w/Filter, 097548 46
High Hose Retriever 47
Housing Module, Single 48

Housing Module, Single and Twin Front Load 49
Housing Module, Twin 50
Housing Module, XTW 51
Meter, 9800Q Single 52
Meter, 9800Q Twin and 9840Q 53
Meter Breakdown 54
Motor Module, 9800Q, 9800QTW1 55
Motor Module, 9800QTW2, 9800QTW1M, 9840Q 56
Nozzle Boot, Front Load Option 57
Platform, Electronic 58
Platform, Electronic - Options 60
Pump Module, 9800Q 62
Pump Module, 9800QTW 64
Pump Module, 9852QTW1 66
Pump Module, 98QTW1M/9840Q 68
Pumping Unit Breakdown 70
Reset 71
Totalizer, Mechanical.. 72

PARTS LIST

USING THIS PARTS LIST

This manual lists parts information for the GASBOY Series 9800Q pumps and dispensers. Using part numbers when ordering will expedite your order and reduce the possibility of the wrong parts being shipped. When ordering replacement parts, be sure to give the complete name and part number as shown in the appropriate parts list. It is also helpful to supply the serial number of the equipment.

This manual is arranged from general to specific, presenting the complete unit first, then the chassis breakdowns, then further breakdowns of the individual components (i.e., dial enclosures, lamp assemblies, discharges, etc.). If you can't find the part you need from the chassis drawing, be sure to check the appropriate parts breakdown for your model.

Procedures requiring disassembly of portions of the pump/dispenser should be performed by competent service personnel. Do not depend upon the repair service of a general mechanic unless he is thoroughly familiar with the mechanism. GASBOY has a distributor network which services fuel dispensing equipment and management systems in every section of the country.

WARNING:

To reduce the risk of electrical shock when servicing, turn off and lock out all power to the pump/dispenser. In submersible pump applications, turn off and lock out power to the submersible pump and any other pumps/dispensers which use that submersible pump. AC power can feed back into a shut-off dispenser when dispensers share a common submersible pump or starter relay. Always turn off and lock out all power to the dispenser and the submersible pump at the master panel and close any impact valve before performing maintenance or service to the dispenser, including the changing of any fuel filters or strainers. Also block islands so no vehicles can pull up to the dispenser when the dispenser is being worked on.

TOP COVER, 9800Q/QX, 9840Q/QX, 9800QTW

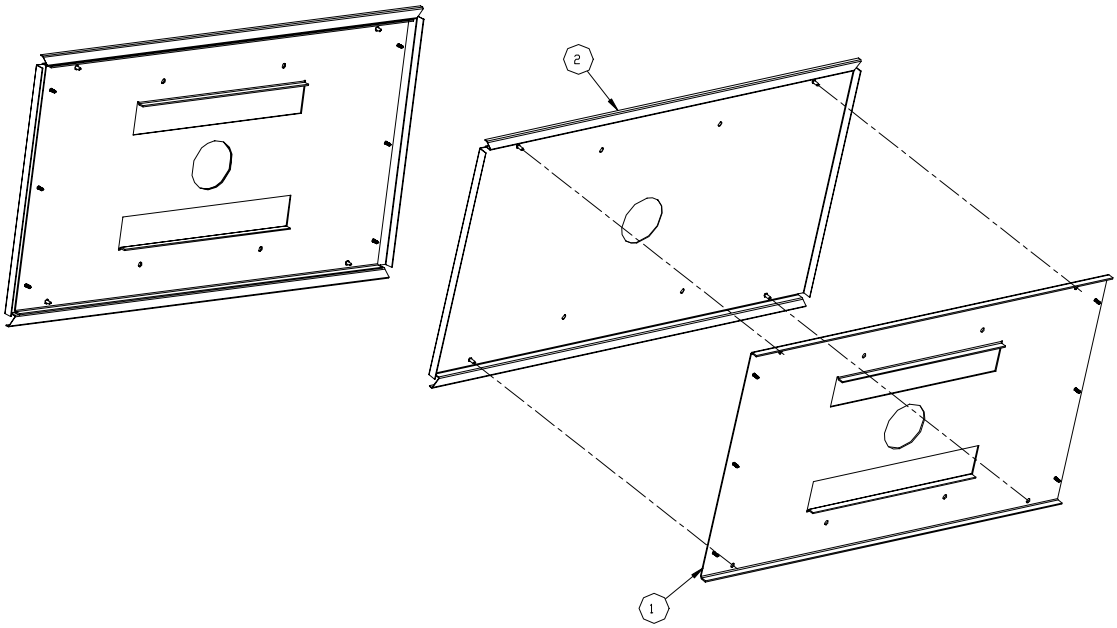

Illustration shown is 98QTW for TopKAT

Item	Part No.	Description
1	022539	Frame, Top 9800Q Series
2	022528	Cover, Top Assy. Galv.
	022529	Cover, Top Assy., SS
	022560	Cover, Top Assy. Galv., TopKAT
	022561	Cover, Top Assy. SS, TopKAT
	026839	Gasket, Top of Cover (Not Shown)

PANEL MODULE, 9800Q

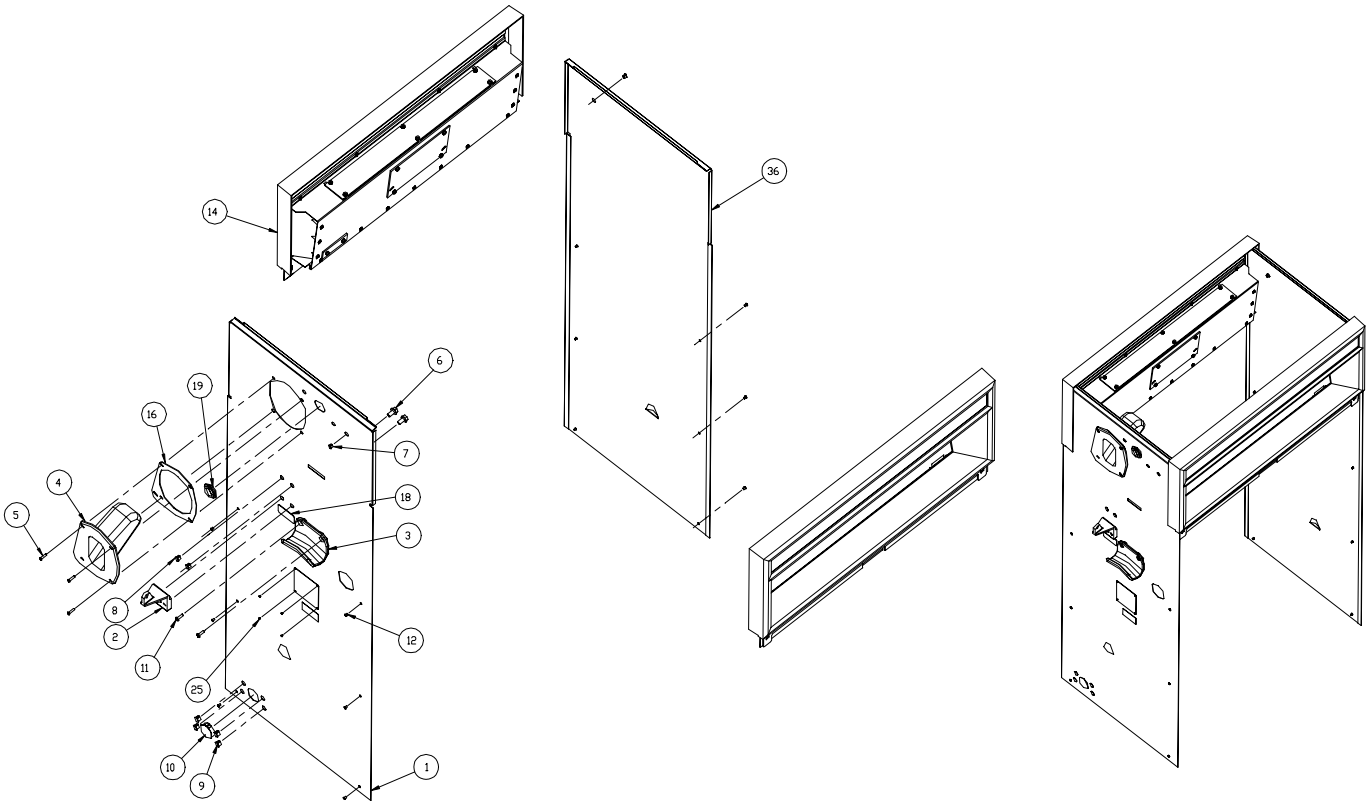

Item	Part No.	Description	Item	Part No.	Description
1	051415	Panel, Side, Galv.	12	049901	Rivet, CBT 5/32D, Al
	051414	Panel, Side, SS	14	026126	Dial Enclosure Assy, 9840
2	003732	Hook, Nozzle	16	026850	Gasket, Nozzle Boot
3	003740	Hook, Hose	18	046610	Decal, Hose/Nozzle
4	003338	Boot, Nozzle	19	028933	Grommet, Control Lever
5	053639	Screw, 8-32 x 5/8 PH FL	21	026838	Gasket, Rubatex 1/4 x 1/2,
6	051928	Screw, 5/16-18 x 5/8			bottom of bezel
7	047210	Plug Snap In TW Fastex	25	049871	Rivet, Avdel
8	047215	Plug, 3/8 Heyco	36	051412	Panel, Side, Left 98, Galv.
9	047238	Plug, 7/16 Hole Blk,		051411	Panel, Side, Left 98, SS
10	047211	Plug, 1-3/8 Heyco 2753	99	040739	Door Assy., blank, Not Shown
11	053772	Screw, 10-32 x 5/8 Pn Hd		040699	Door Assy., blank, SS, Not Shown

PANEL MODULE, 9800Q FRONT LOAD

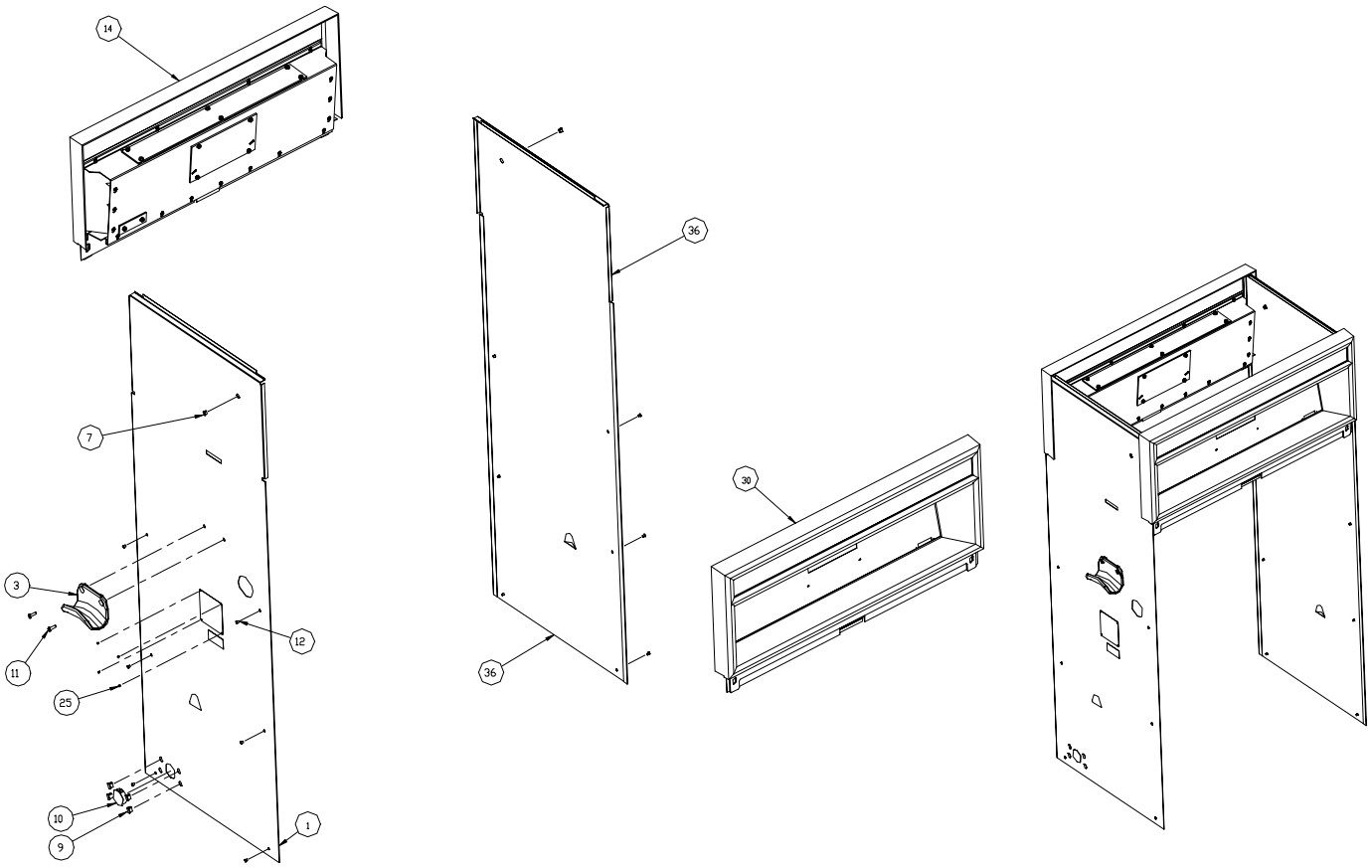

Item	Part No.	Description
1	051419	Panel, Side, Galv., FL
	051418	Panel, Side, SS, FL
3	003740	Hook, Hose
7	047210	Plug Snap In TW Fastex
9	047238	Plug, 7/16 Hole Blk,
10	047211	Plug, 1-3/8 Heyco 2753
11	053772	Screw, 10-32 x 5/8 Pn Hd
12	049901	Rivet, CBT 5/32D, Al
14	026126	Dial Encl. Assy., 9840
21	026838	Gasket, Rubatex 1/4 x 1/2, bottom of bezel

Item	Part No.	Description
25	049871	Rivet, Avdel
30	025313	Dial Encl. Assy., Blank, FL
36	051412	Panel, Side, Left 98, Galv.
	051411	Panel, Side, Left 98, SS
99	041421	Door Assy., Frt Ld, Not Shown
	042088	Door Assy., Frt Ld, SS, Not Shown
	040739	Door Assy., Blank, Not Shown
	040699	Door Assy., Blank, SS, Not Shown

PANEL MODULE, 9800Q, INTERNAL RETRIEVER

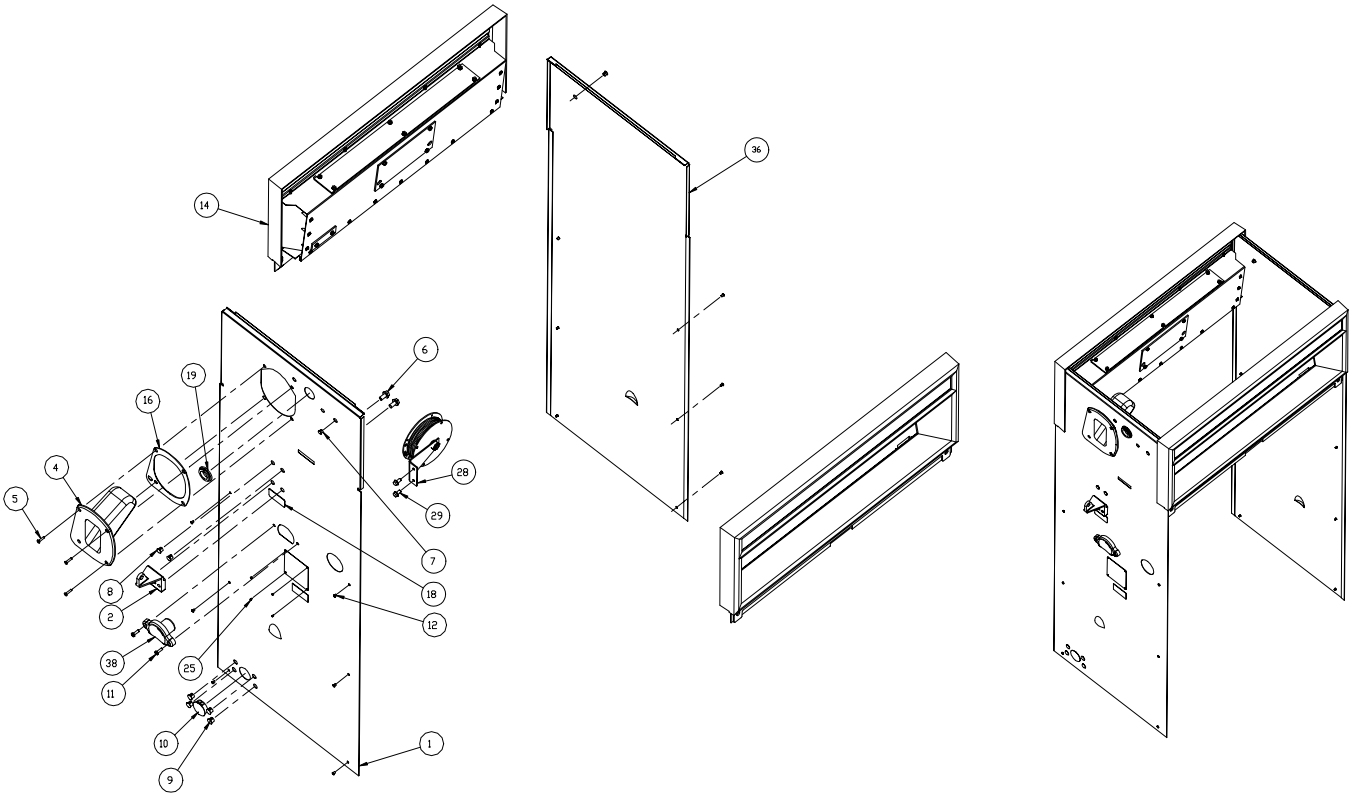

Item	Part No.	Description	Item	Part No.	Description
1	051413	Panel, Side, IR, Galv.	16	026850	Gasket, Nozzle Boot
	051410	Panel, Side, IR, SS	18	046610	Decal, Hose/Nozzle
2	003732	Hook, Nozzle	19	028933	Grommet, Control Lever
4	003338	Boot, Nozzle	21	026838	Gasket, Rubatex 1/4 x 1/2,
5	053639	Screw, 8-32 x 5/8 PH FL			bottom of bezel
6	051928	Screw, 5/16-18 x 5/8	25	049871	Rivet, Avdel
7	047210	Plug, Snap In TW	28	046824	Internal Hose Retriever
8	047215	Plug, 3/8 Heyco	29	053919	Screw, 1/4-20 x 1/2 HH
9	047238	Plug, 7/16 Hole Blk,	36	051412	Panel, Side, Left 98, Galv.
10	047211	Plug, 1-3/8 Heyco 2753		051411	Panel, Side, Left 98, SS
11	053772	Screw, 10-32 x 5/8 Pn Hd	38	040035	Cable Guide, Int. Retriever
12	049901	Rivet, CBT 5/32D, Al	99	040739	Door Assy., Blank, Not Shown
14	026126	Dial Encl. Assy, 9840		040699	Door Assy., Blank, SS, Not Shown

PANEL MODULE, 9800Q, FRONT LOAD, INTERNAL RETRIEVER

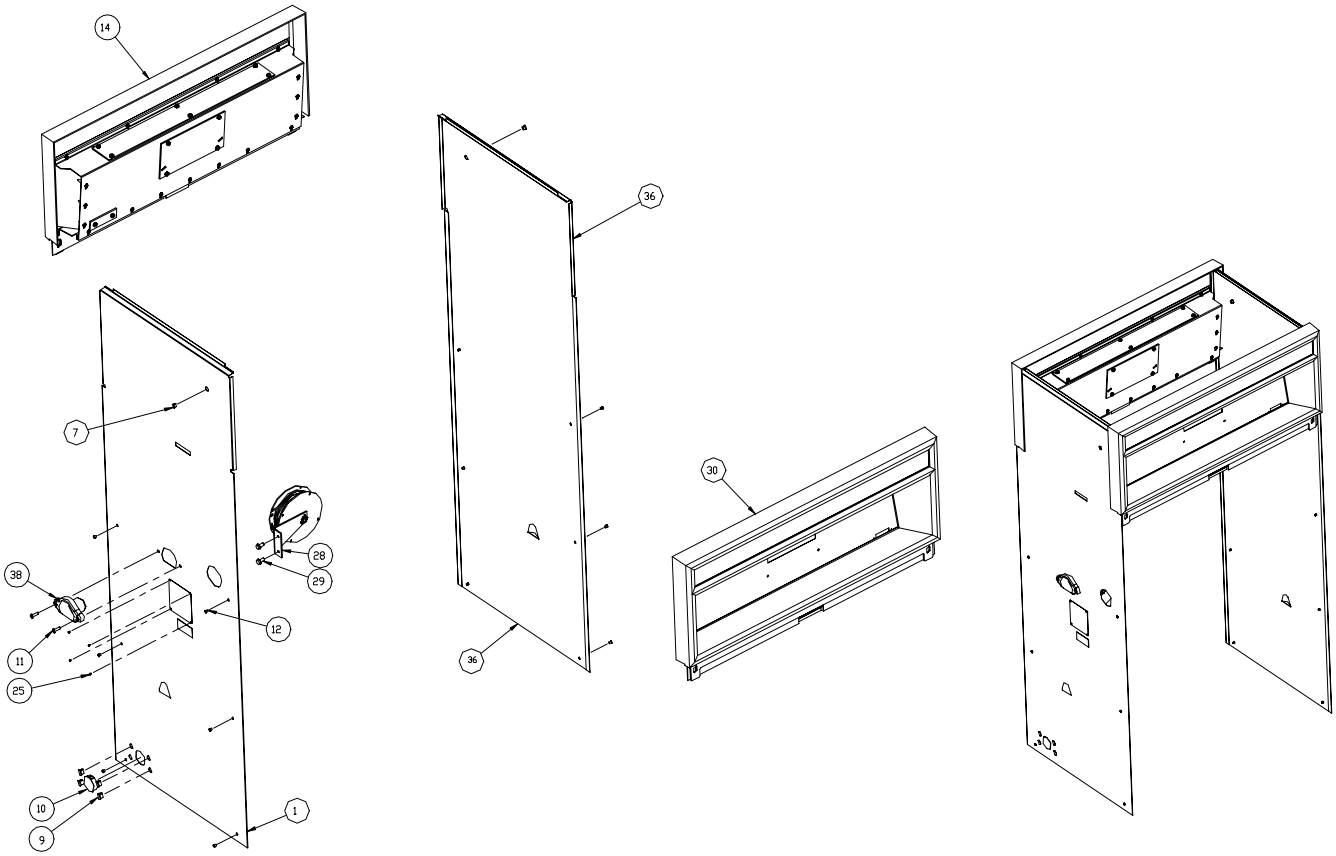

Item	Part No.	Description
1	051417	Panel, Side, IR, Galv., FL
	051416	Panel, Side, IR, SS, FL
7	047210	Plug, Snap In TW
9	047238	Plug, 7/16 Hole Blk,
10	047211	Plug, 1-3/8 Heyco 2753
11	053772	Screw, 10-32 x 5/8 Pn Hd
12	049901	Rivet, CBT 5/32D, Al
14	026126	Dial Encl. Assy, 9840
21	026838	Gasket, Rubatex 1/4 x 1/2, bottom of bezel

Item	Part No.	Description
25	049871	Rivet, Avdel
28	046824	Internal Hose Retriever
29	053919	Screw, 1/4-20 x 1/2 HH
30	026313	Dial Encl. Assy., Blank FL
36	051412	Panel, Side, Left 98, Galv.
	051411	Panel, Side, Left 98, SS
38	040035	Cable Guide, Int. Retriever
99	041421	Door Assy., Frt Ld, Not Shown
	042088	Door Assy., Frt Ld, SS, Not Shown
	040739	Door Assy., Blank, Not Shown
	040699	Door Assy., Blank, SS, Not Shown

PANEL MODULE, 9800QTW

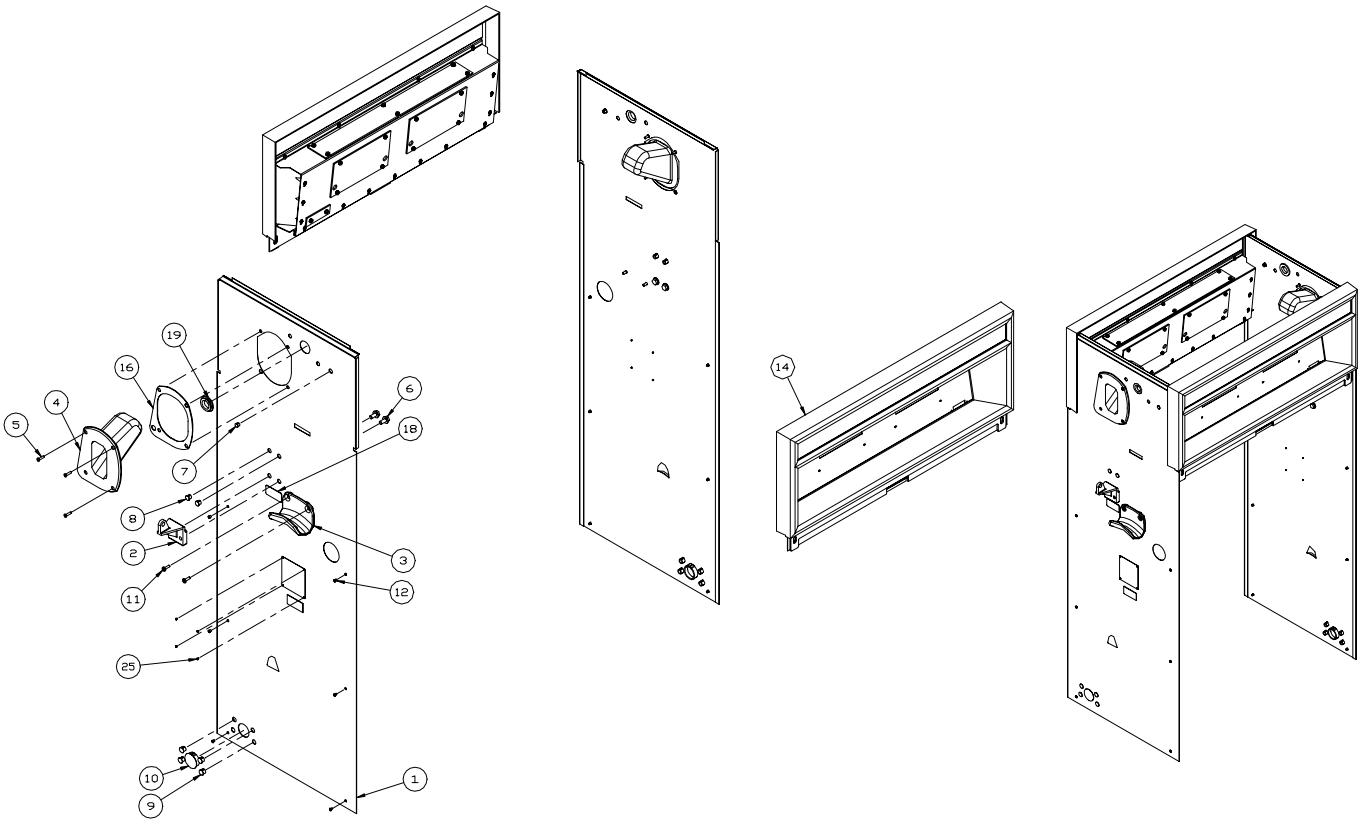

Item	Part No.	Description	Item	Part No.	Description
1	051415	Panel, Side, Galv.	12	049901	Rivet, CBT 5/32D, Al
	051414	Panel, Side, SS	14	026119	Dial Enclosure Assy, 98TW
2	003732	Hook, Nozzle	15	025548	Face Dial Blank Totalizer
3	003740	Hook, Hose	16	026850	Gasket, Nozzle Boot
4	003338	Boot, Nozzle	18	046610	Decal, Hose/Nozzle
5	053639	Screw, 8-32 x 5/8 PH FL	19	028933	Grommet, Control Lever
6	051928	Screw, 5/16-18 x 5/8	21	C01989	Gasket, Rubatex 1/4 x 1/2,
7	047210	Plug, Snap In TW			bottom of bezel
8	047215	Plug, 3/8 Heyco	25	049871	Rivet, Avdel
9	047238	Plug, 7/16 Hole Blk,	99	040739	Door Assy., Blank, Not Shown
10	047211	Plug, 1-3/8 Heyco 2753		040699	Door Assy., Blank, SS, Not Shown
11	053772	Screw, 10-32 x 5/8 Pn Hd			

PANEL MODULE, 9800QTW FRONT LOAD

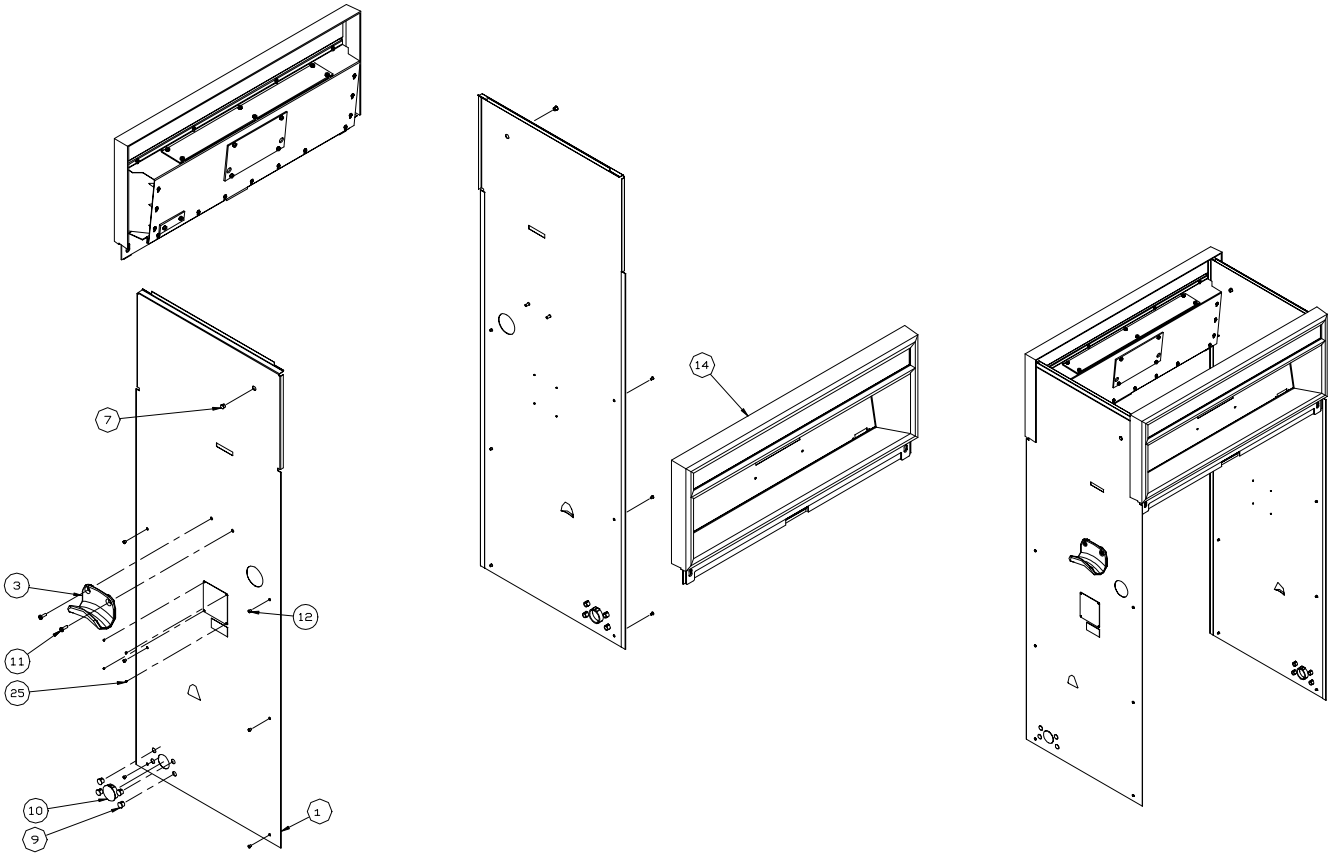

Item	Part No.	Description	Item	Part No.	Description
1	051419	Panel, Side, Galv., FL	12	049901	Rivet, CBT 5/32D, Al
	051418	Panel, Side, SS	14	026126	Dial Enclosure Assy, 9840
3	003740	Hook, Hose	21	C01989	Gasket, Rubatex 1/4 x 1/2,
7	047210	Plug, Snap In TW			bottom of bezel
9	047238	Plug, 7/16 Hole Blk,	25	049871	Rivet, Avdel
10	047211	Plug, 1-3/8 Heyco 2753	99	041421	Door Assy., Frt Ld, Not Shown
11	053772	Screw, 10-32 x 5/8 Pn Hd		042088	Door Assy., Frt Ld, SS, Not Shown

PANEL MODULE, 9800QTW INTERNAL RETRIEVER

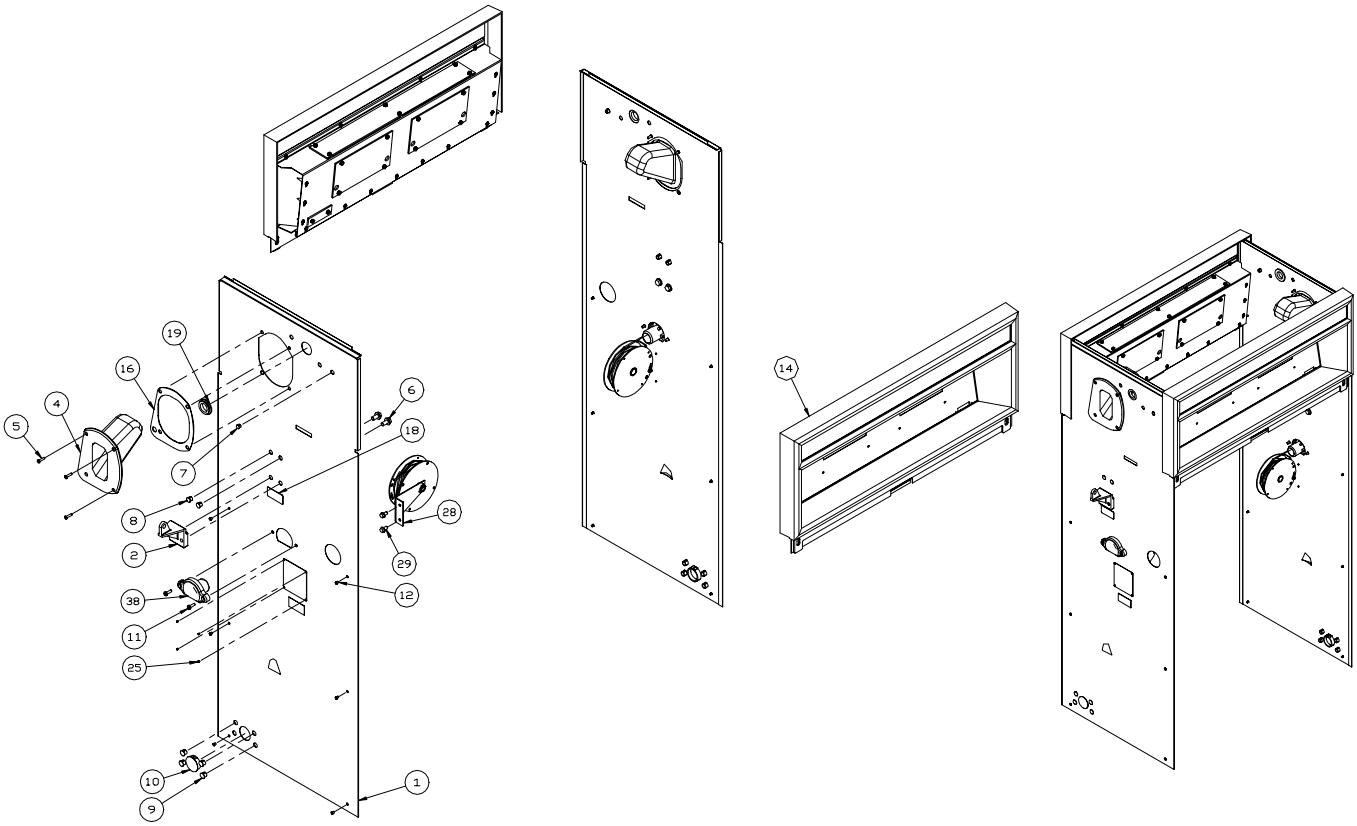

Item	Part No.	Description	Item	Part No.	Description
1	051413	Panel, Side, IR, Galv.	14	026119	Dial Encl. Assy., TW
	051410	Panel, Side, IR, SS	16	026850	Gasket, Nozzle Boot
2	003732	Hook, Nozzle	18	046610	Decal, Hose/Nozzle
4	003338	Boot, Nozzle	19	028933	Grommet, Control Lever
5	053639	Screw, 8-32 x 5/8 PH FL	21	C01989	Gasket, Rubatex 1/4 x 1/2,
6	051928	Screw, 5/16-18 x 5/8			bottom of bezel
7	047210	Plug, Snap In TW	25	049871	Rivet, Avdel
8	047215	Plug, 3/8 Heyco	28	046824	Internal Hose Retriever
9	047238	Plug, 7/16 Hole Blk,	29	053919	Screw, 1/4-20 x 1/2 HH
10	047211	Plug, 1-3/8 Heyco 2753	38	040035	Cable Guide, Int. Retriever
11	053772	Screw, 10-32 x 5/8 Pn Hd	99	040739	Door Assy., Blank, Not Shown
12	049901	Rivet, CBT 5/32D, Al		040699	Door Assy., Blank, SS, Not Shown

PANEL MODULE, 9800QTW FRONT LOAD INTERNAL RETRIEVER

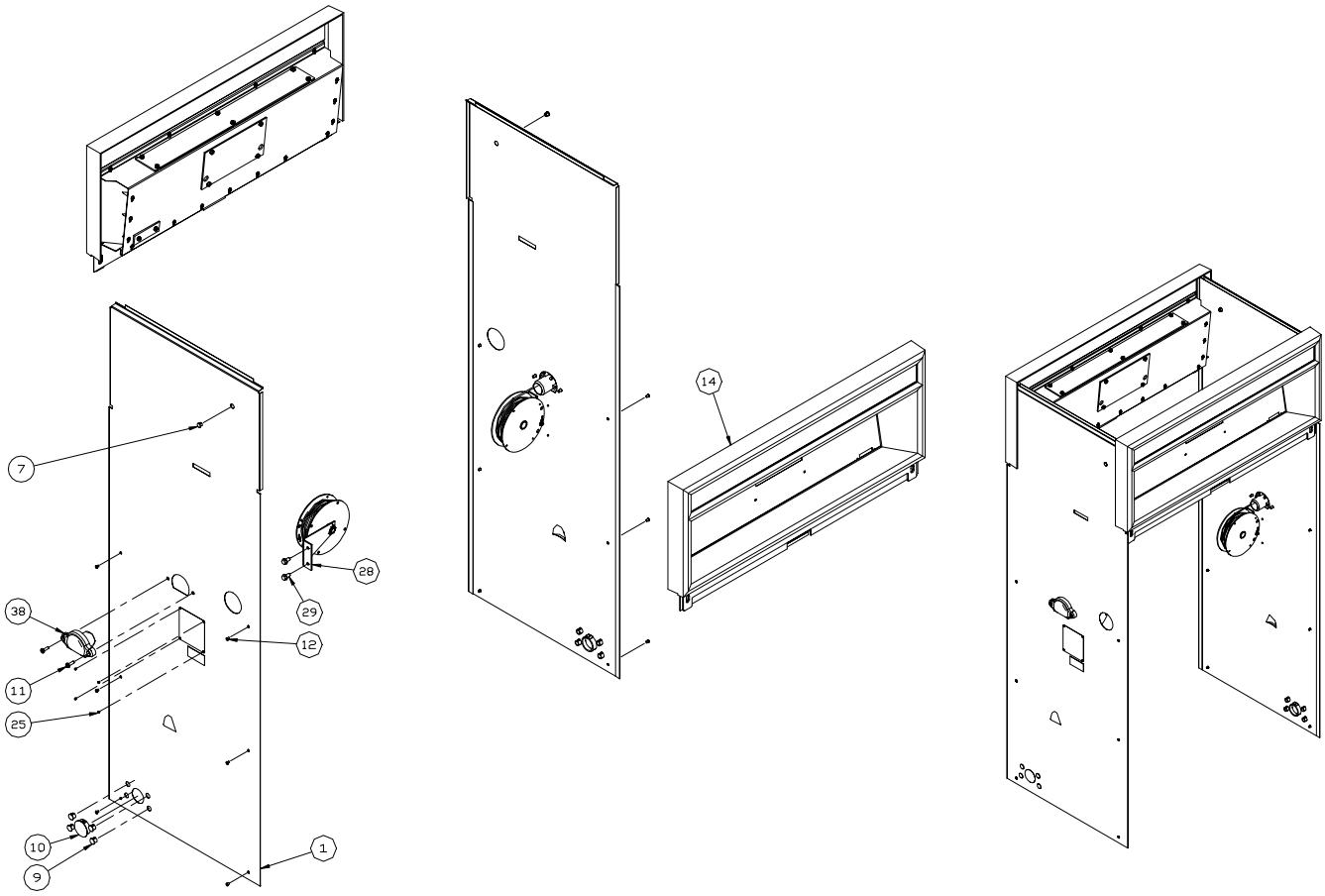

Item	Part No.	Description	Item	Part No.	Description
1	051417	Panel, Side, IR, Galv., FL	21	C01989	Gasket, Rubatex 1/4 x 1/2, bottom of bezel
	051416	Panel, Side, IR, SS, FL			
9	047238	Plug, 7/16 Hole Blk,	25	049871	Rivet, Avdel
10	047211	Plug, 1-3/8 Heyco 2753	28	046824	Internal Hose Retriever
11	053772	Screw, 10-32 x 5/8 Pn Hd	29	053919	Screw, 1/4-20 x 1/2 HH
12	049901	Rivet, CBT 5/32D, Al	38	040035	Cable Guide, Int. Retriever
14	026126	Dial Encl. Assy., 9840	99	041421	Door Assy., Frt Ld, Not Shown
				042088	Door Assy., Frt Ld, SS, Not Shown

DIAL ENCLOSURE ASSEMBLY, 9800Q SINGLE, 9840Q, 9840QX

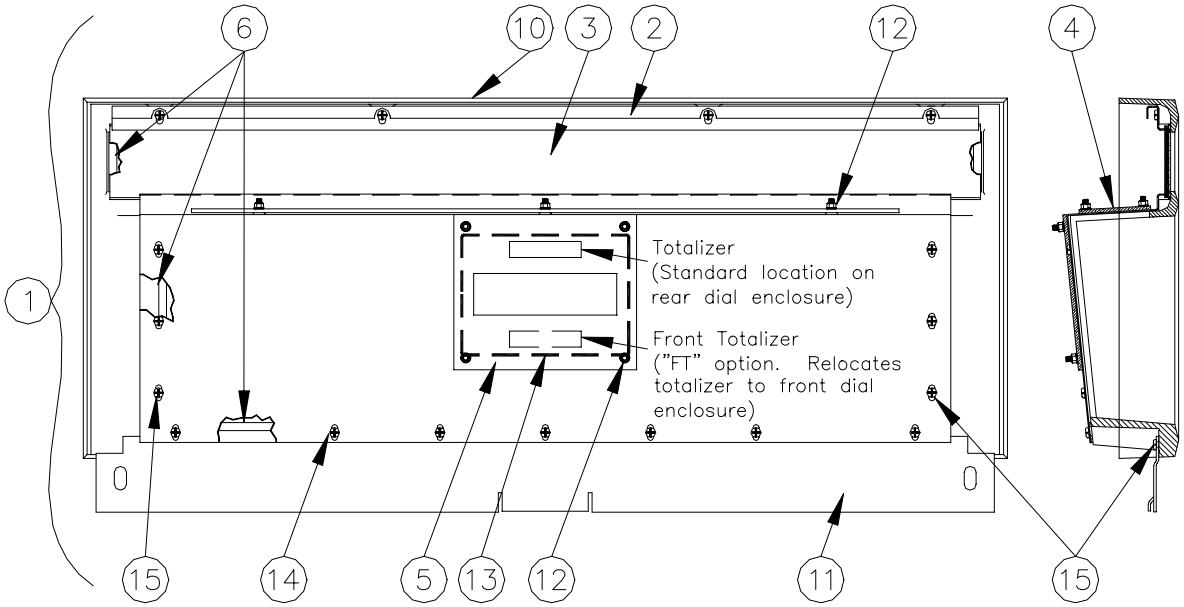

1	024806	Dial Enclosure Assembly Complete, 9840Q/9840QX without totalizer window		
	024805	Dial Enclosure Assembly Complete, 9840Q/9840QX with totalizer window		
	026216	Dial Enclosure Assembly Complete, 9840Q/9840QX w/optional front totalizer (FT option)		
		These assemblies include all items listed below. When ordering a complete dial enclosure assembly, you must also specify one of the following silkscreened text variations:		
	025413	Gallons without totalizer	025412	Gallons with totalizer
	026217	Gallons w/ optional front totalizer		
	025423	Litres without totalizer	025424	Litres with totalizer

These silkscreens have a black background with white text. If you have a special variation, you must include the serial number of your dispenser with your order.

2	011308	Latch Bar
3	028839	Display Glass, w/optional silkscreen
4	033716	Dial Lens *(See NOTE 1)*
5	028838	Dial Glass *(See NOTE 1)*
6	027019	Gasket, 10 ft. strip
10		Bezel, Plastic *(Not available for individual sale; see NOTE 2)*
11	011367	Lock bar
12	039069	Nut, Hex Keps, 6-32
13	C08099	Silicone Sealant *(See NOTE 1)*
14	053737	Screw, 8-32 x 3/8, self-tapping (7 across bottom of sheet metal)
15	053640	Screw, 8-18 x 3/8, self-tapping

NOTE 1: *When replacing individual components such as the dial glass or lens, you must use silicone sealant to properly seal the unit from external moisture.*

NOTE 2: *The part numbers for the plastic bezel and the silkscreened sheet metal are not listed individually, since they must be ordered only as part of the complete assembly.*

DIAL ENCLOSURE ASSEMBLY, TWIN

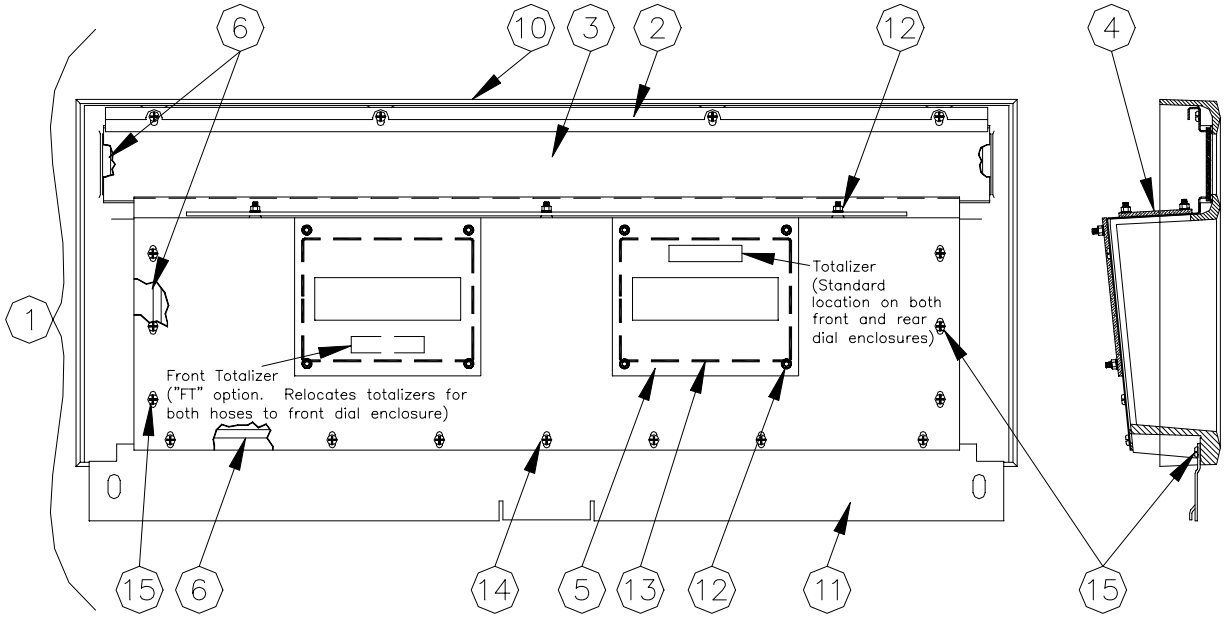

Item	Part No.	Description
1	026120	Dial Enclosure Assembly Complete, Twin
	026127	Dial Enclosure Assembly Complete, Twin, w/optional front totalizer (FT option)
		These assemblies include all items listed below. When ordering a complete dial enclosure assembly, you must also specify one of the following silkscreened text variations:
	025327	Gallons — 025492 Gallons w/ optional front totalizer
	025398	Litres
		These silkscreens have a white background with black text. If you have a special variation, you must include the serial number of your dispenser with your order.
2	011308	Latch Bar, Twin
3	028839	Display Glass, w/optional silkscreen
4	033716	Dial Lens *(See NOTE 1)*
5	028838	Dial Glass *(See NOTE 1)*
6	027019	Gasket, 10 ft. strip
10		Bezel, Plastic *(Not available for individual sale; see NOTE 2)*
11	011367	Lock bar
12	039069	Nut, Hex Keps, 6-32
13	C08099	Silicone Sealant *(See NOTE 1)*
14	053737	Screw, 8-32 x 3/8, self-tapping (7 across bottom of sheet metal)
15	053640	Screw, 8-18 x 3/8, self-tapping

NOTE 1: *When replacing individual components such as the dial glass or lens, you must use silicone sealant to properly seal the unit from external moisture.*

NOTE 2: *The part numbers for the plastic bezel and the silkscreened sheet metal are not listed individually, since they must be ordered only as part of the complete assembly.*

FRAME MODULE, ALL MODELS

Item	Part No.	Description
1	042093	Frame Side Lower, 9800Q
2	015799	Column-Register
3	022514	Base, 9800Q
4	053919	Screw, 1/4-20 x 1/2 HH
5	015872	Column Brace, 9800Q

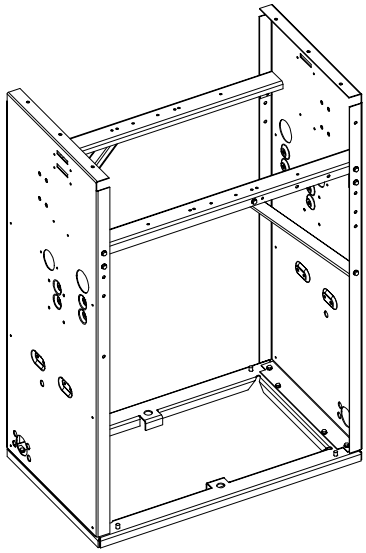

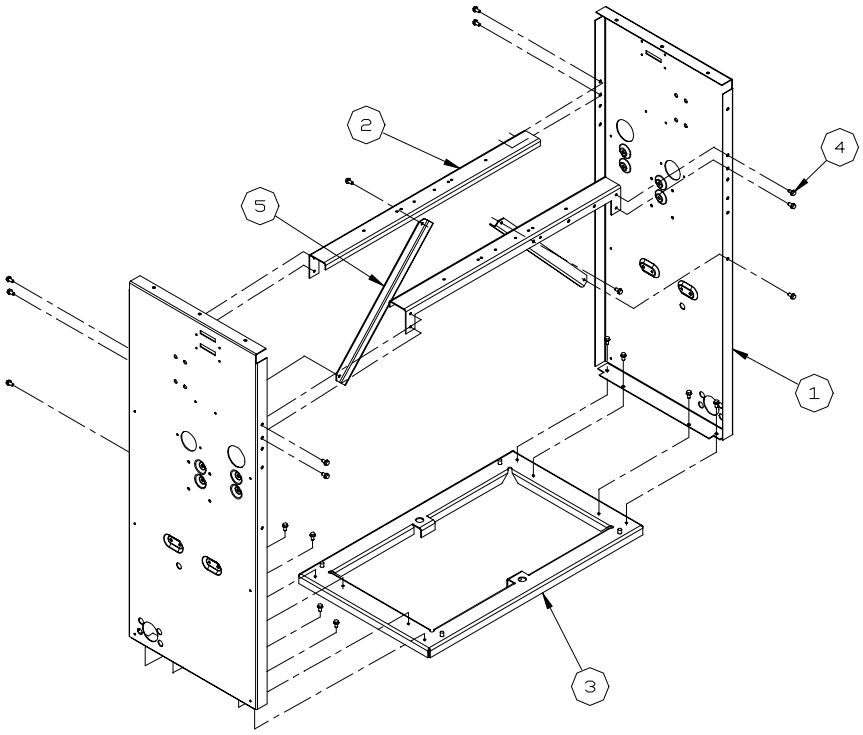

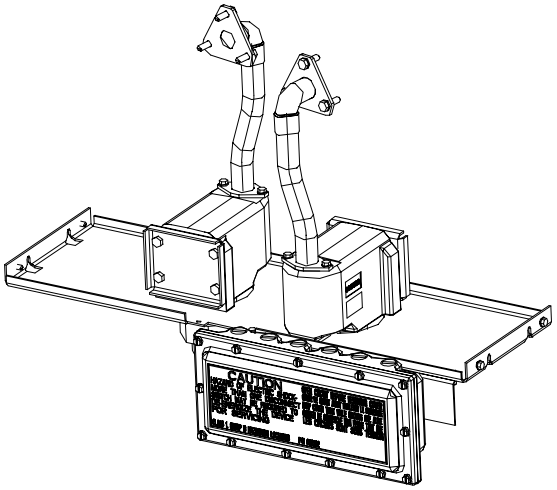
CAUTION

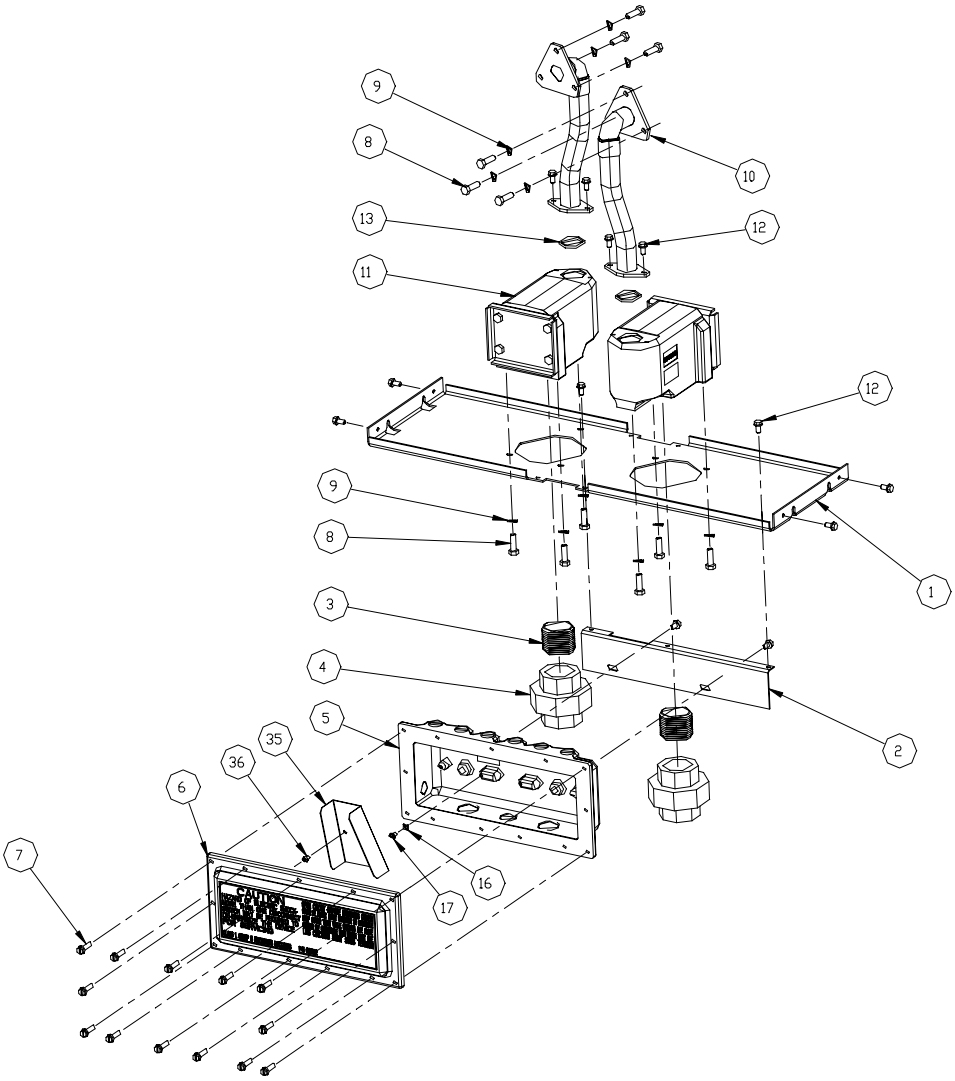
9
8
10
13
12
11
12
9
8
1
3
4
5
2
35
36
6
7
16
17
CAUTION

DISPENSER MODULE, 9800QXTW2

Item	Part No.	Description
1	015167	Platform, Str Cast
2	015166	Bracket, Junction Box
3	038005	Pipe TBE 1-1/2 x 1-3/4 Close
4	066385	Union, 1-1/2 NPT
5	004291	Junction Box, 98Q/QXTW1/TW2
6	003292	Junction Box Cover
7	053918	Screw, 1/4-20X1 Hex Hd
8	052435	Screw, 5/16-18 x 1
9	068875	Washer, Lock, Std., Spring 5/16 Pl
10	063608	Tube Assy., Strainer Cast/Meter
11	063377	Strainer & Check Valve Assy.
12	053919	Screw, 1/4-20 x 1/2 HH
13	049002	O-Ring, Square Cut #7-218
16	067500	Washer, Brass Cupped
17	052976	Screw, 10-32 x 3/8 Bnd Hd Slt
18	063263	Strainer
35	015464	Bracket, Separator, JBox
36	053017	Screw, 10-32 x 3/8 Pn Hd Phl

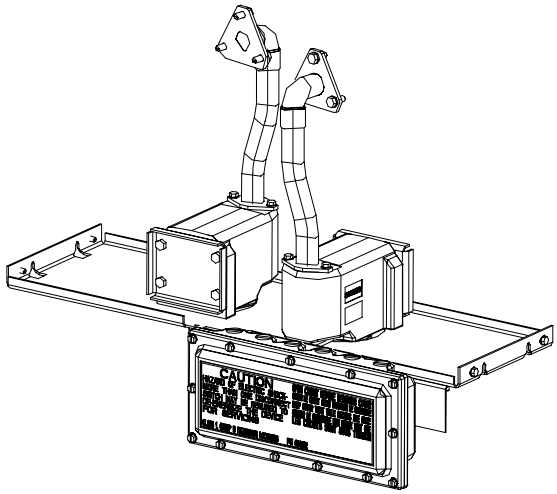

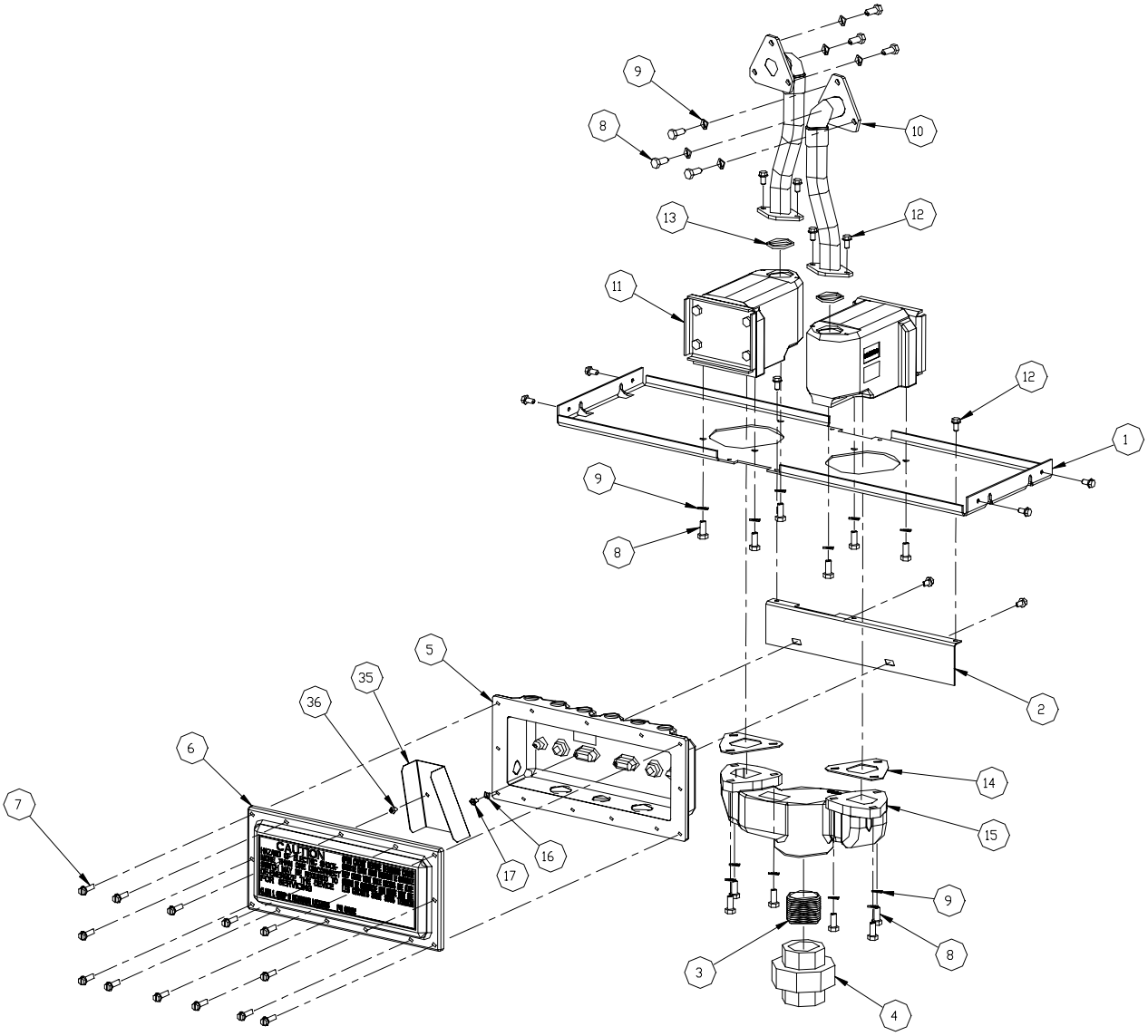
9
8
10
13
12
11
12
1
9
8
2
5
35
36
6
7
14
15
16
17
9
8
3
4

DISPENSER MODULE, 9800QXTW1, 9840QX

Item	Part No.	Description
1	015167	Platform, Str Cast
2	015166	Bracket, Junction Box
3	038005	Pipe TBE 1-1/2 x 1-3/4 Close, 9800QXTW1
	038065	Pipe TBE 2 x 2 Close, 9840QX
4	066385	Union, 1-1/2" NPT, 9800QXTW1
	066386	Union 2" NPT Std Black, 9840QX
5	004291	Junction Box, 98Q/QXTW1/TW2
	008291	Junction Box, 98Q/QX
6	003292	Junction Box Cover
7	053918	Screw, 1/4-20X1 Hex Hd
8	052435	Screw, 5/16-18 x 1
9	068875	Washer, Lock, Std., Spring 5/16 Pl
10	063608	Tube Assy., Strainer Cast/Meter
11	063378	Strainer & Check Valve Assy.
12	053919	Screw, 1/4-20 x 1/2 HH
13	049002	O-Ring, Square Cut #7-218
14	026858	Inlet-Flex Assy. Gasket, 1-1/2
15	004566	Manifold Inlet, 1-1/2 NPT, 9800QXTW1
	003566	Manifold Inlet, 2" NPT, 9840QX
16	067500	Washer, Brass Cupped
17	052976	Screw, 10-32 x 3/8 Bnd Hd Slt
18	063263	Strainer
35	015464	Bracket, Separator, JBox
36	053017	Screw, 10-32 x 3/8 Pn Hd Phl

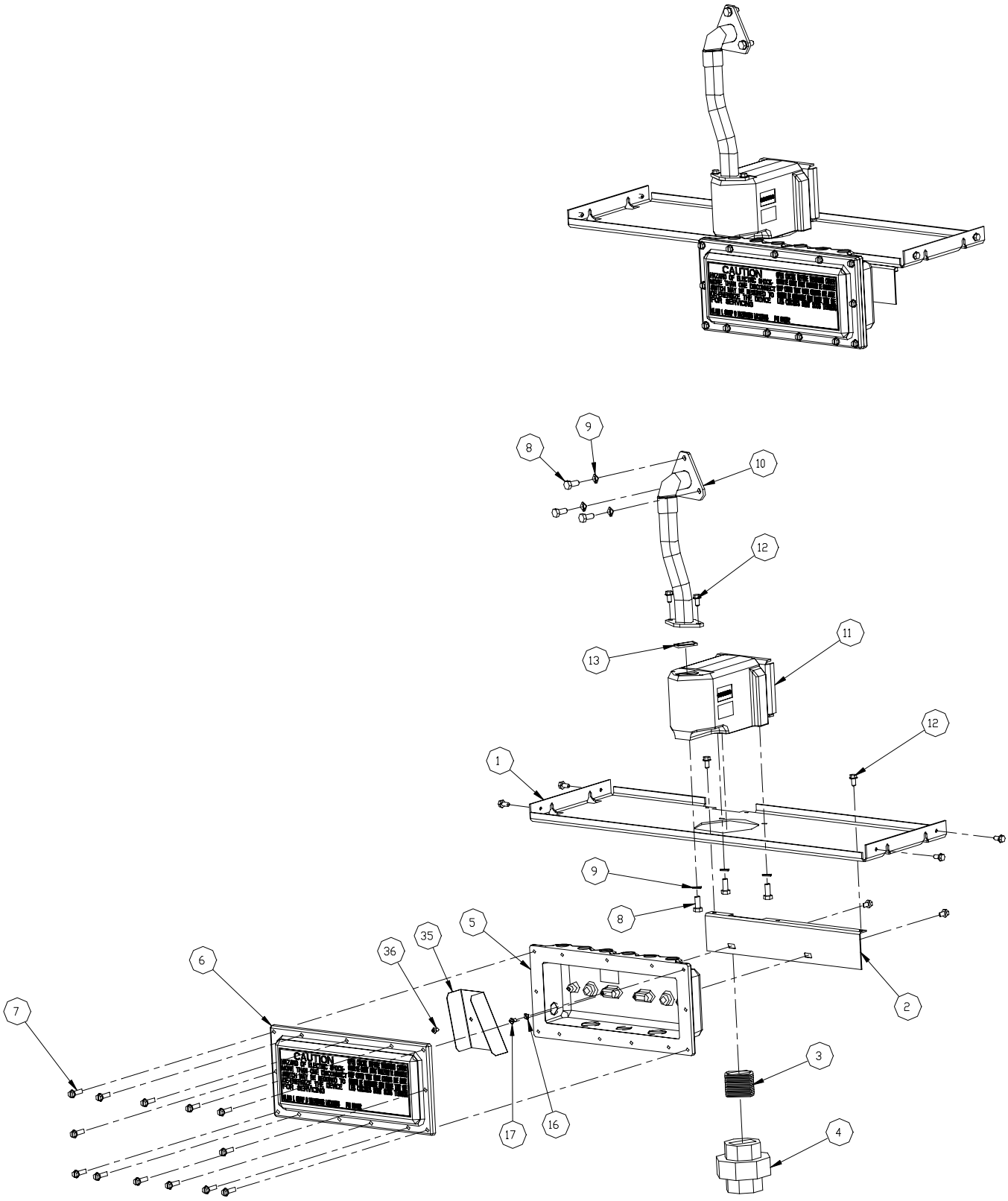
CAUTION
1
2
3
4
5
6
7
8
9
10
11
12
13
16
17
35
36

DISPENSER MODULE, 9800QX

Item	Part No.	Description
1	015167	Platform, Str Cast
2	015166	Bracket, Junction Box
3	038005	Pipe TBE 1-1/2 x 1-3/4 Close
4	066385	Union, 1-1/2" NPT
5	005291	Junction Box, 98Q/QX
6	003292	Junction Box Cover
7	053918	Screw, 1/4-20X1 Hex Hd
8	052435	Screw, 5/16-18 x 1
9	068875	Washer, Lock, Std., Spring 5/16 Pl
10	063608	Tube Assy., Strainer Cast/Meter
11	063377	Strainer & Check Valve Assy.
12	053919	Screw, 1/4-20 x 1/2 HH
13	049002	O-Ring, Square Cut #7-218
16	067500	Washer, Brass Cupped
17	052976	Screw, 10-32 x 3/8 Bnd Hd Slt
18	063263	Strainer
34	015464	Bracket, Separator, JBox
35	053017	Screw, 10-32 x 3/8 Pn Hd Phl

DISCHARGE 9840Q/QX WITH SOLENOID VALVE, 097617-115V; 097636-230V

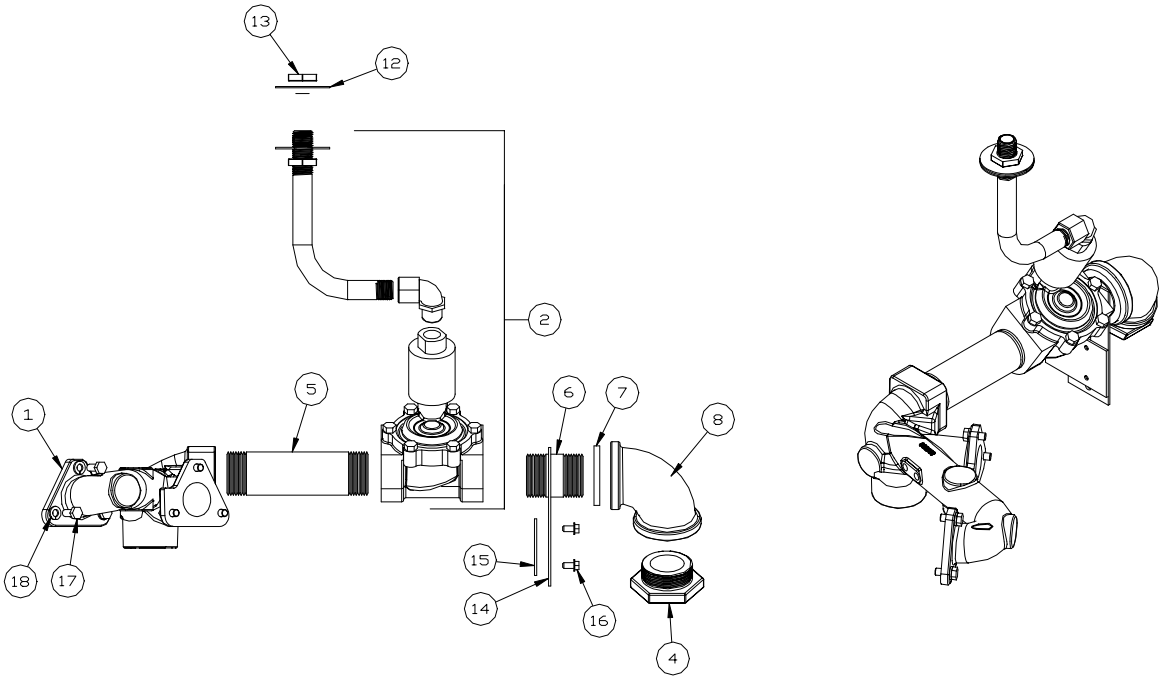

Item	Part No.	Description
1	006588	Discharge Casting
2	067202	VL Solenoid Assy., 1.5 Skin 2-Stg, Top Cond, 115V
	067203	VL Solenoid Assy., 1.5 Skin 2-Stg, Top Cond, 230V
4	017276	Red Bushing Hex, 1-1/4 x 1
5	044954	Pipe, TBE 1-1/2 x 6-1/4
6	044910	Pipe, TBE, 1-1/2 x 2-1/2
7	028975	Grommet, Discharge-150
8	Z07941	Elbow, Red:1-1/2 x 1-1/4 x 90
12	068445	Washer, 2.4 x .858 x .062 Stl Pl
13	039209	Locknut, 1/2 NPT Machined
14	015489	Bracket, Discharge 1-1/2 Pipe
15	015474	Bracket, Discharge Lower
16	053919	Screw, 1/4-20 x 1/2 HH
17	068875	Washer, Lock Std Spring 5/16
18	051895	Screw, 5/16 x 18-3/4 HHC

DISCHARGE 9840QX W/SOLENOID VALVE & SATELLITE PIPE 115V/230V, 097619-115V; 097637-230V

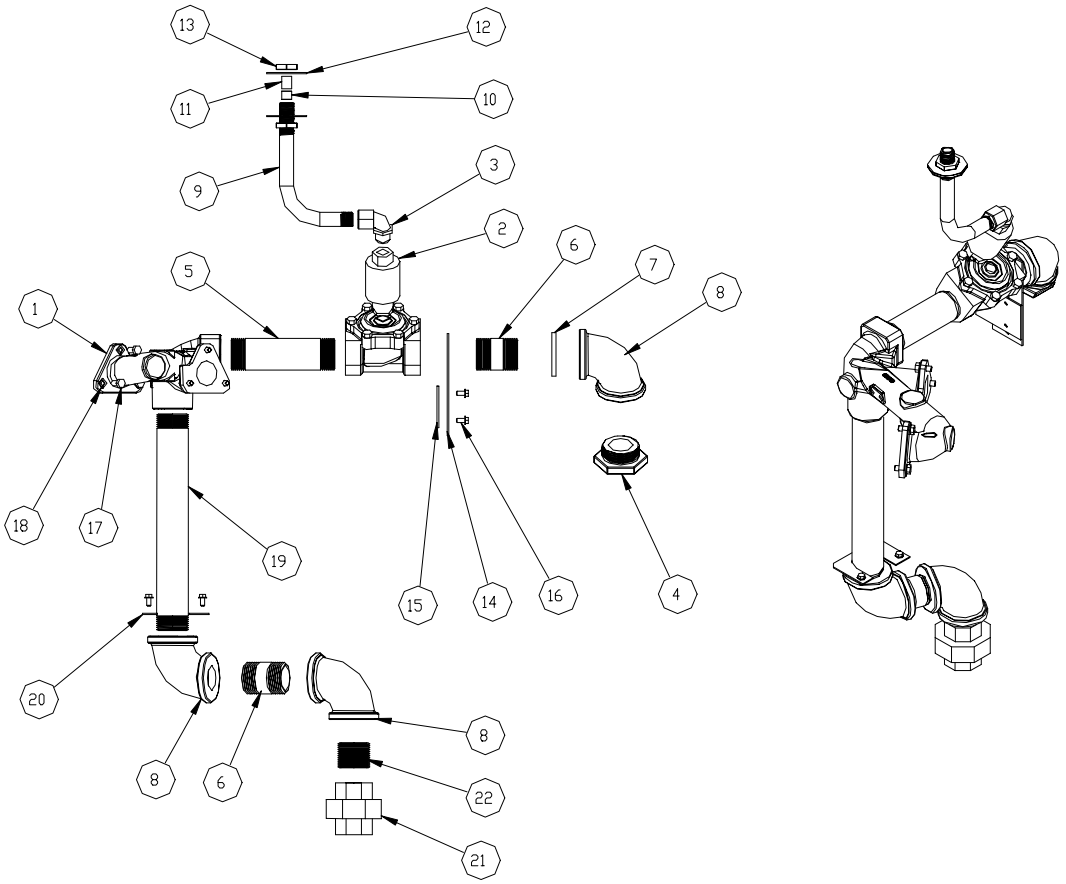

Item	Part No.	Description
1	004588	Discharge Casting
2	067202	VL Solenoid Assy., 1.5 Skin 2-Stg, Top Cond, 115V
	067203	VL Solenoid Assy., 1.5 Skin 2-Stg, Top Cond, 230V
4	017276	Red Bushing Hex, 1-1/4 x 1
5	044954	Pipe, TBE 1-1/2 x 6-1/4
6	044910	Pipe, TBE, 1-1/2 x 2-1/2
7	028975	Grommet, Discharge-150
8	Z07941	Elbow, Red:1-1/2 x 1-1/4 x 90
12	068445	Washer, 2.4 x .858 x .062 Stl Pl
13	039209	Locknut, 1/2 NPT Machined
14	015489	Bracket, Discharge 1-1/2 Pipe
15	015474	Bracket, Discharge Lower
16	053919	Screw, 1/4-20 x 1/2 HH
17	068875	Washer, Lock Std Spring 5/16
18	051895	Screw, 5/16 x 18-3/4 HHC
19	044926	Pipe, TBE 1-1/2 x 13
20	014858	Bracket, Sat Pipe Guide 40
21	066385	Union, 1-1/2" NPT
22	038005	Pipe TBE, 1-1/2 x 1 x 3/4

DISCHARGE, 9852Q W/SOLENOID VALVE, 097612-115V; 097631-230V

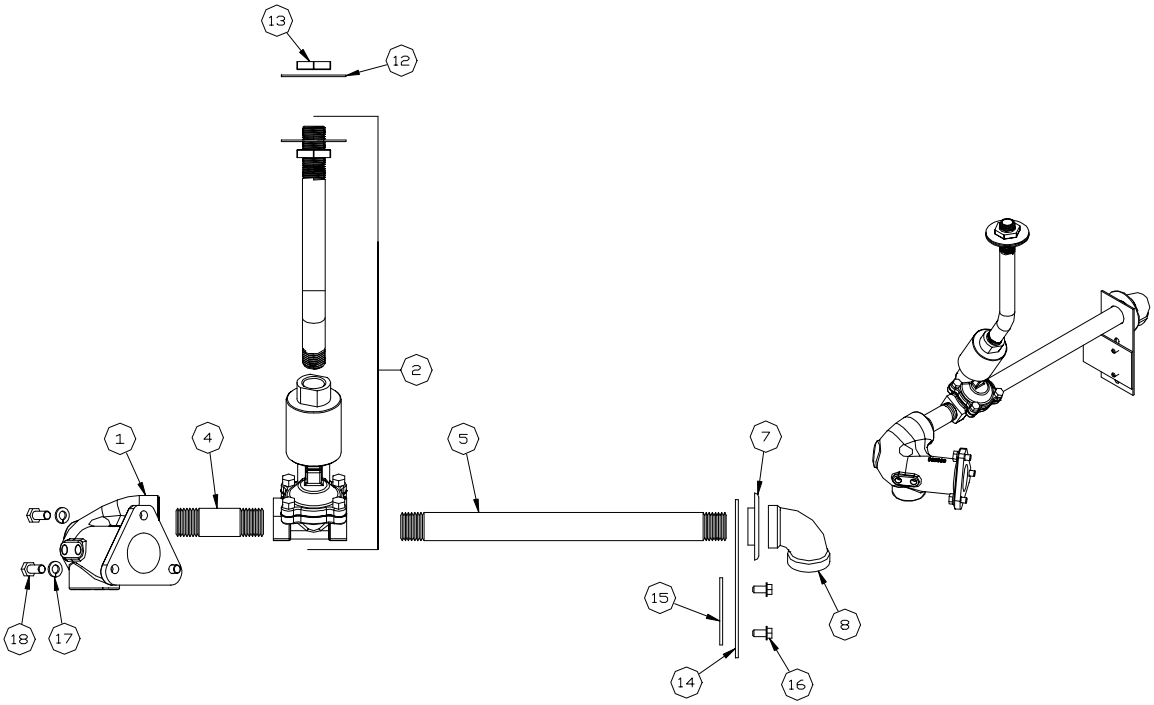

Item	Part No.	Description
1	010586	Discharge Casting, 3/4"
2	067200	Valve Assy., 3/4" HiFlow 115 THRD
	067201	Valve Assy., 3/4" HiFlow 230 THRD
4	043980	Pipe, TBE 3/4 x 3-1/4
5	044112	Pipe, TBE 3/4 x 12-1/8
7	028930	Grommet Discharge, 3/4
8	024955	Elbow, 3/4 x 90
12	068445	Washer, 2.4 x .858 x .062 Stl Pl
13	039209	Locknut, 1/2 NPT Machined
14	015488	Bracket Discharge, 3/4
15	015474	Bracket Discharge Lower
16	053919	Screw, 1/4-20 x 1/2 HH
17	068875	Washer, Lock Std Spring 5/16
18	051895	Screw, 5/16 x 18-3/4, HHC

DISCHARGE, 9852Q W/FILTER & SOLENOID VALVE, 097611-115V; 097630-230V

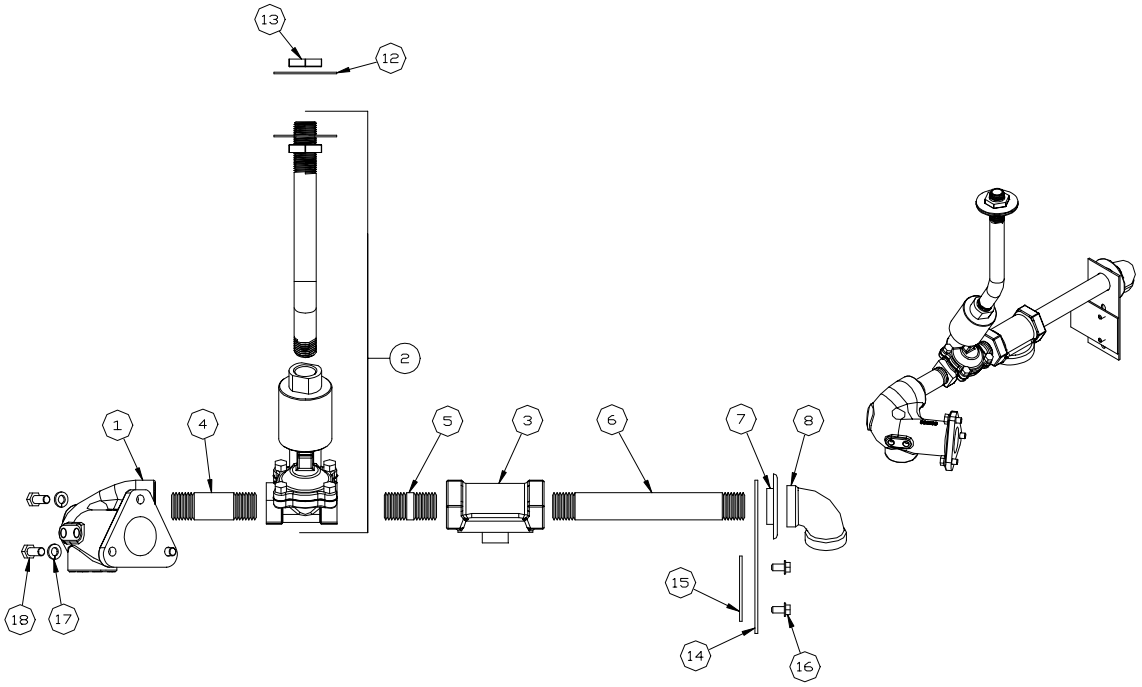

Item	Part No.	Description
1	010586	Discharge Casting, 3/4"
2	067200	Valve Assy., 3/4" HiFlow 115 THRD
	067201	Valve Assy., 3/4" HiFlow 230 THRD
3	003043	Adapter-Filter, 3/4"
4	043980	Pipe, TBE 3/4 x 3-1/4
5	043960	Pipe, TBE 3/4 x 2
6	044116	Pipe, TBE 3/4 x 7-3/8
7	028930	Grommet Discharge, 3/4
8	024955	Elbow, 3/4 x 90
12	068445	Washer, 2.4 x .858 x .062 Stl Pl
13	039209	Locknut, 1/2 NPT Machined
14	015488	Bracket Discharge, 3/4
15	015474	Bracket Discharge Lower
16	053919	Screw, 1/4-20 x 1/2 HH
17	068875	Washer, Lock Std Spring 5/16
18	051895	Screw, 5/16 x 18-3/4, HHC

DISCHARGE, 9852QTW2 W/SOLENOID VALVE, 097604-115V; 097623-230V

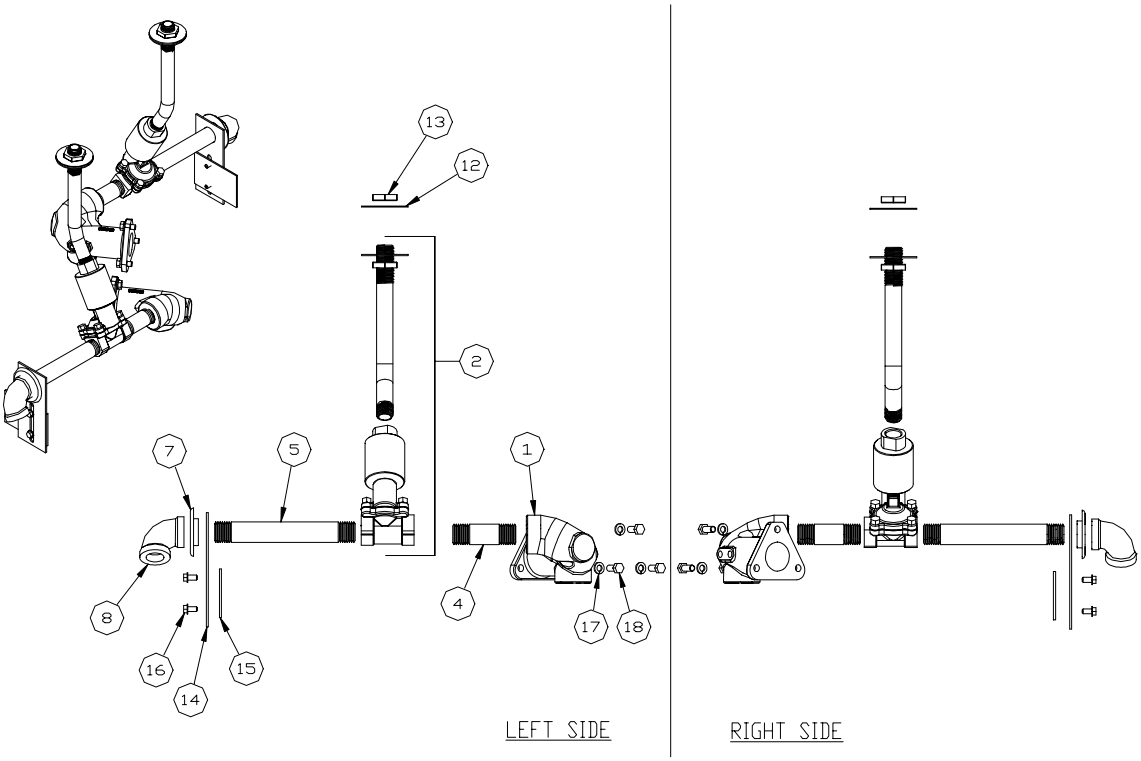

Item	Part No.	Description
1	010586	Discharge Casting, 3/4"
2	067200	Valve Assy., 3/4" HiFlow 115 THRD
	067201	Valve Assy., 3/4" HiFlow 230 THRD
4	043980	Pipe TBE 3/4 x 3-1/4
5	044143	Pipe, TBE 3/4 x 7-1/4
7	028930	Grommet Discharge, 3/4
8	024955	Elbow, 3/4 x 90
12	068445	Washer, 2.4 x .858 x .062 Stl Pl
13	039209	Locknut, 1/2 NPT Machined
14	015488	Bracket Discharge, 3/4
15	015474	Bracket Discharge Lower
16	053919	Screw, 1/4-20 x 1/2 HH
17	068875	Washer, Lock Std Spring 5/16
18	051895	Screw, 5/16 x 18-3/4, HHC

DISCHARGE, 9852QXTW W/SOLENOID VALVE & SATELLITE PIPE, 097608-115V; 097627-230V

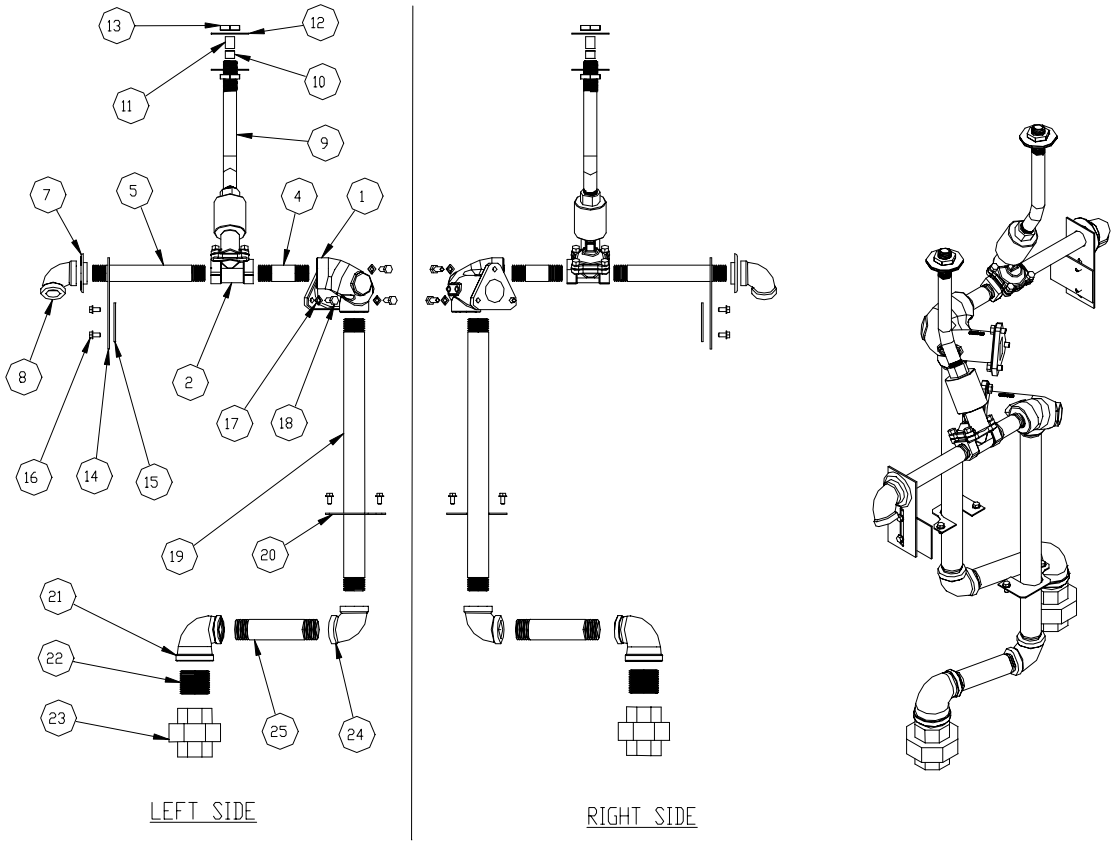

Item	Part No.	Description
1	008586	Discharge Casting, 3/4"
2	067200	Valve Assy., 3/4" HiFlow 115 THRD
	067201	Valve Assy., 3/4" HiFlow 230 THRD
4	043980	Pipe TBE 3/4 x 3-1/4
5	044143	Pipe, TBE 3/4 x 7-1/4
7	028930	Grommet Discharge, 3/4
8	024955	Elbow, 3/4 x 90
12	068445	Washer, 2.4 x .858 x .062 Stl Pl
13	039209	Locknut, 1/2 NPT Machined
14	015488	Bracket Discharge, 3/4
15	015474	Bracket Discharge Lower
16	053919	Screw, 1/4-20 x 1/2 HH
17	068875	Washer, Lock Std Spring 5/16
18	051895	Screw, 5/16 x 18-3/4, HHC
19	044681	Pipe, TBE, 1 x 17-1/2
20	014857	Bracket, Sat. Pipe
21	024936	Elbow, 1-1/2 x 1 x 90
22	030085	Pipe, TBE 1-1/2 x 1-3/4
23	066385	Union, 1-1/2" NPT
24	024895	Elbow, 1 x 90
25	044579	Pipe TBE, 1 x 5-3/8

DISCHARGE, 9852QTW2 W/FILTER & SOLENOID VALVE, 097603-115V; 097622-230V

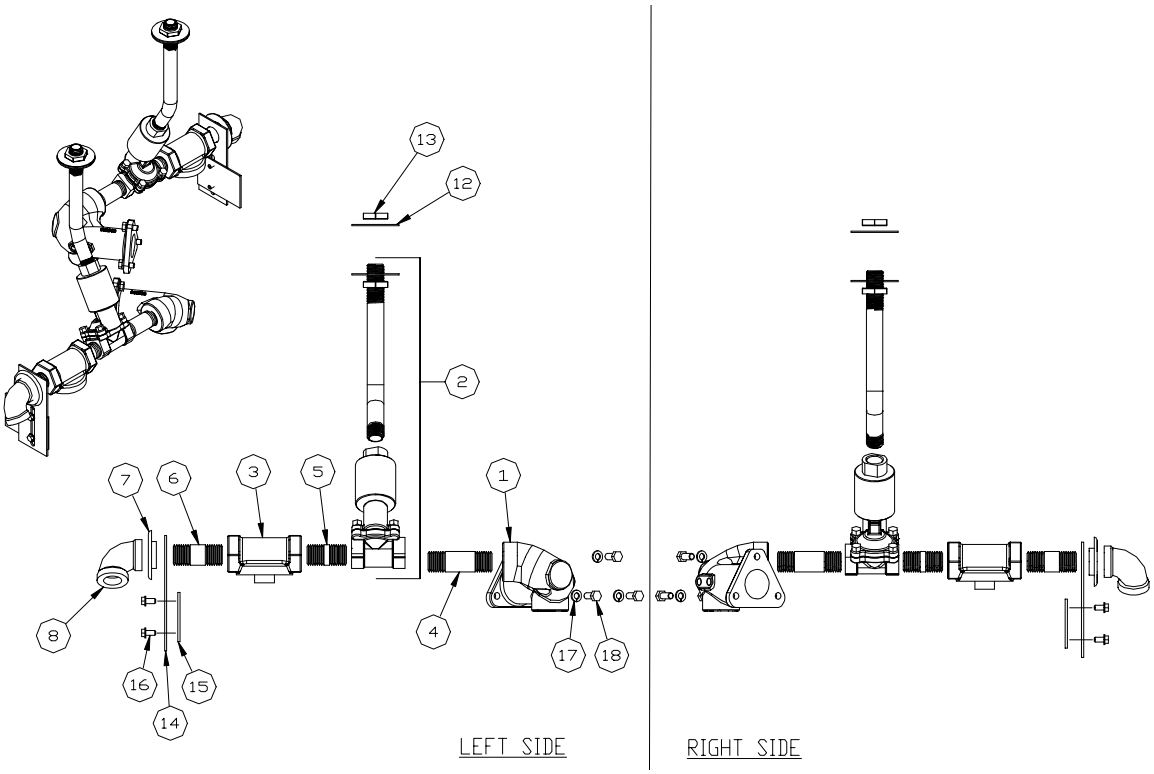

Item	Part No.	Description
1	010586	Discharge Casting, 3/4"
2	067200	Valve Assy., 3/4" HiFlow 115 THRD
	067201	Valve Assy., 3/4" HiFlow 230 THRD
3	003043	Adapter-Filter, 3/4"
4	043980	Pipe, TBE 3/4 x 3-1/4
5	043960	Pipe, TBE 3/4 x 2
6	043975	Pipe, TBE 3/4 x 2-1/2
7	028930	Grommet Discharge, 3/4
8	024955	Elbow, 3/4 x 90
12	068445	Washer, 2.4 x .858 x .062 Stl Pl
13	039209	Locknut, 1/2 NPT Machined
14	015488	Bracket Discharge, 3/4
15	015474	Bracket Discharge Lower
16	053919	Screw, 1/4-20 x 1/2 HH
17	068875	Washer, Lock Std Spring 5/16
18	051895	Screw, 5/16 x 18-3/4, HHC

DISCHARGE, 9852QXTW2 W/FILTER, SOLENOID VALVE, SATELLITE PIPE, 097607-115V; 097626-230V

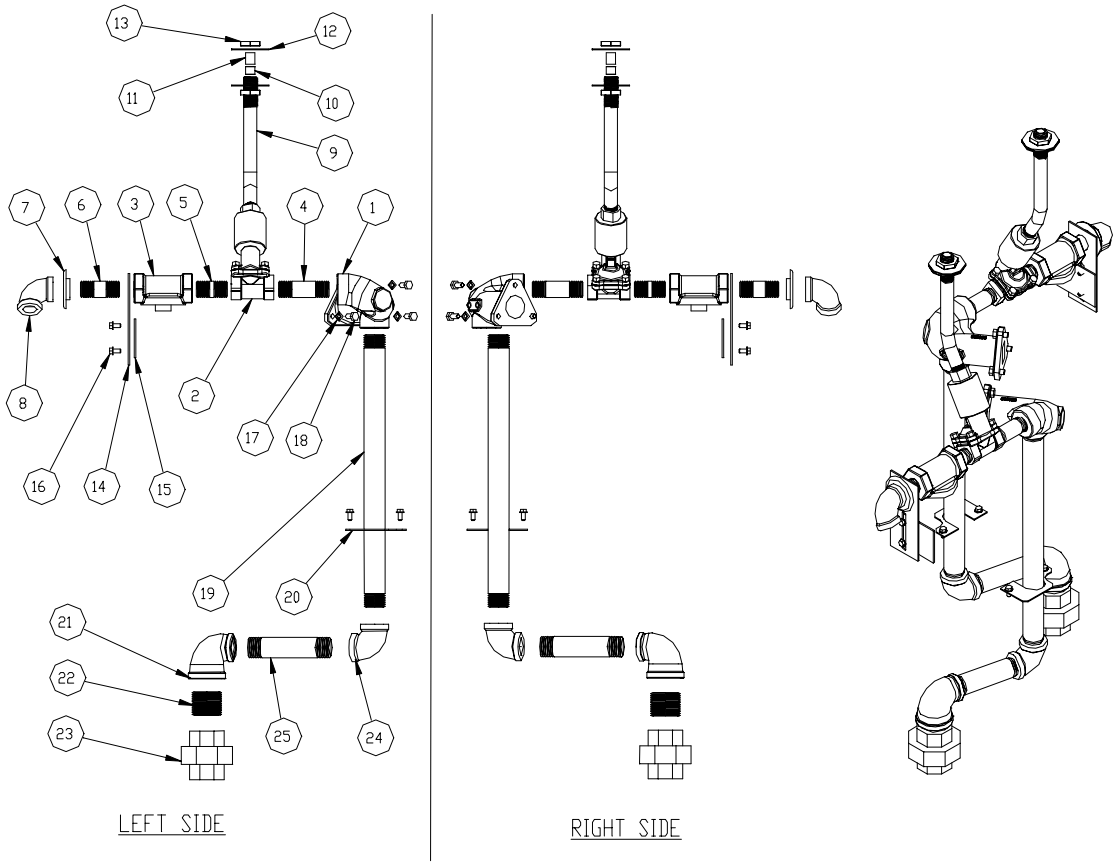

Item	Part No.	Description
1	008586	Discharge Casting, 3/4"
2	067200	Valve Assy., 3/4" HiFlow 115 THRD
	067201	Valve Assy., 3/4" HiFlow 230 THRD
3	003043	Adapter-Filter, 3/4"
4	043980	Pipe, TBE 3/4 x 3-1/4
5	043960	Pipe, TBE 3/4 x 2
6	043975	Pipe, TBE 3/4 x 2-1/2
7	028930	Grommet Discharge, 3/4
8	024955	Elbow, 3/4 x 90
12	068445	Washer, 2.4 x .858 x .062 Stl Pl
13	039209	Locknut, 1/2 NPT Machined
17	068875	Washer, Lock Std Spring 5/16
18	051895	Screw, 5/16 x 18-3/4, HHC
15	015474	Bracket Discharge Lower
14	015488	Bracket Discharge, 3/4
16	053919	Screw, 1/4-20 x 1/2 HH
19	044681	Pipe TBE, 1 x 17-1/2
20	014857	Bracket, Sat Pipe Guide
21	024936	Elbow, 1-1/2 x 1 x 90
22	038005	Pipe, TBE 1-1/2 x 1-3/4, Close
23	066385	Union, 1-1/2' NPT
24	024895	Elbow, 1 x 90
25	044579	Pipe TBE, 1 x 5-3/8

DISCHARGE, 9852QX W/SOLENOID VALVE & SATELLITE PIPE, 097616-115V; 097635-230V

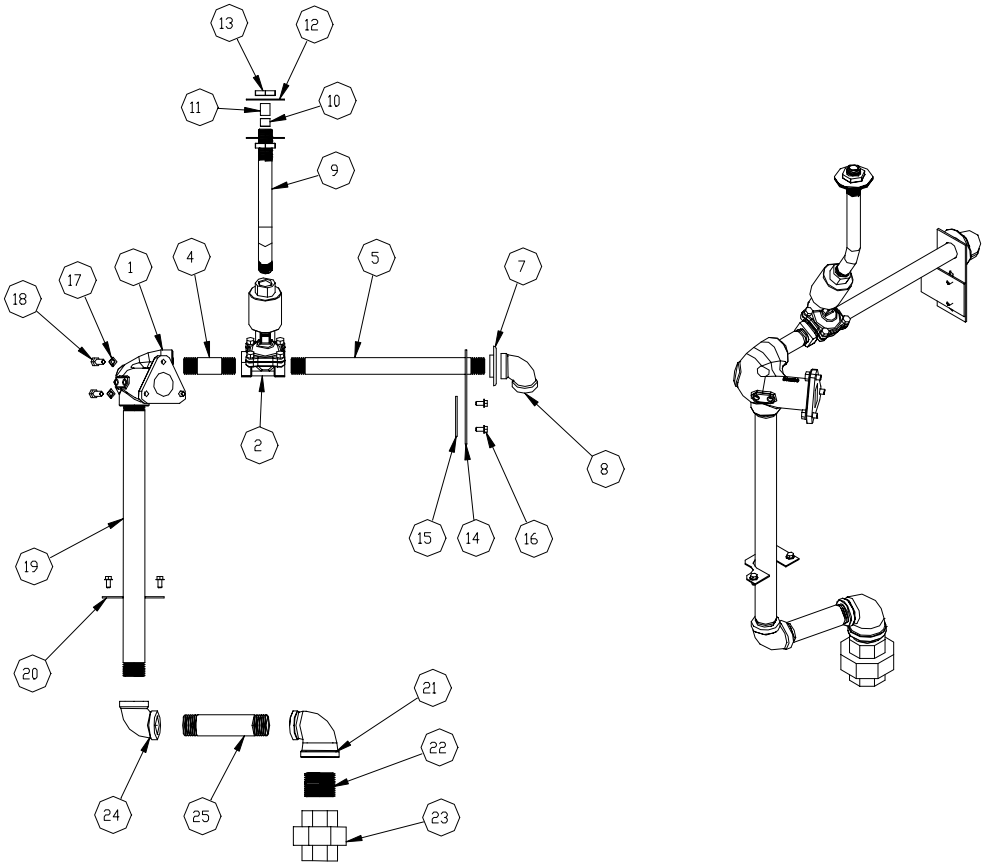

Item	Part No.	Description
1	008586	Discharge Casting, 3/4"
2	067200	Valve Assy., 3/4" HiFlow 115 THRD
	067201	Valve Assy., 3/4" HiFlow 230 THRD
4	043980	Pipe, TBE, 3/4 x 3-1/4
5	044112	Pipe, TBE 3/4 x 12-1/8
7	028930	Grommet Discharge, 3/4"
8	024955	Elbow, 3/4 x 90
12	068445	Washer, 2.4 x .858 x .062 Stl Pl
13	039209	Locknut, 1/2 NPT Machined
14	015488	Bracket Discharge, 3/4

Item	Part No.	Description
15	015474	Bracket Discharge Lower
16	053919	Screw, 1/4-20 x 1/2 HH
17	068875	Washer, Lock Std Spring 5/16
18	051895	Screw, 5/16 x 18-3/4, HHC
19	044681	Pipe TBE, 1 x 17-1/2
20	014857	Bracket, Sat Pipe Guide
21	024936	Elbow, 1-1/2 x 1 x 90
22	038005	Pipe, TBE 1-1/2 x 1-3/4, Close
23	066385	Union, 1-1/2" NPT
24	024895	Elbow, 1 x 90
25	044579	Pipe TBE, 1 x 5-3/8

DISCHARGE, 9852QX W/FILTER, SOLENOID VALVE, SATELLITE PIPE, 097615-115V; 097634-230V

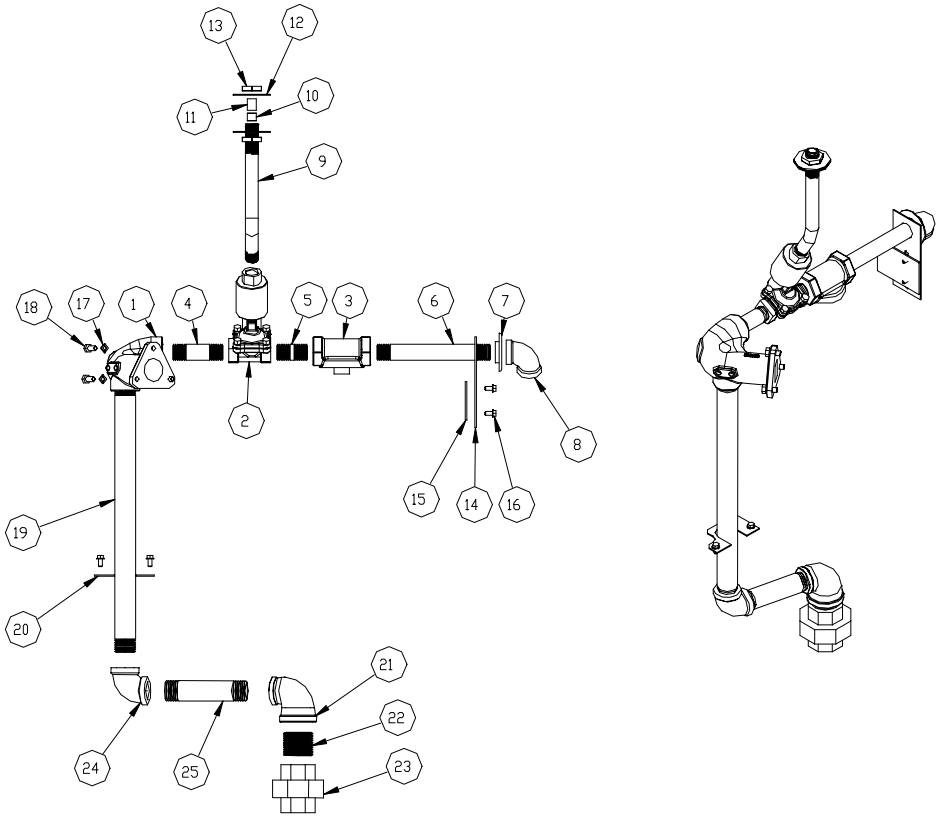

Item	Part No.	Description
1	008586	Discharge Casting, 3/4"
2	067200	Valve Assy., 3/4" HiFlow 115 THRD
	067201	Valve Assy., 3/4" HiFlow 230 THRD
3	003043	Adapter-Filter, 3/4"
4	043980	Pipe, TBE 3/4 x 3-1/4
5	043960	Pipe, TBE 3/4 x 2
6	044116	Pipe, TBE 3/4 x 7-3/8
7	028930	Grommet Discharge, 3/4
8	024955	Elbow, 3/4 x 90
12	068445	Washer, 2.4 x .858 x .062 Stl Pl
13	039209	Locknut, 1/2 NPT Machined

Item	Part No.	Description
14	015488	Bracket Discharge, 3/4
15	015474	Bracket Discharge Lower
16	053919	Screw, 1/4-20 x 1/2 HH
17	068875	Washer, Lock Std Spring 5/16
18	051895	Screw, 5/16 x 18-3/4, HHC
19	044681	Pipe TBE, 1 x 17-1/2
20	014857	Bracket, Sat Pipe Guide
21	024936	Elbow, 1-1/2 x 1 x 90
22	038005	Pipe, TBE 1-1/2 x 1-3/4, Close
23	066385	Union, 1-1/2" NPT
24	024895	Elbow, 1 x 90
25	044579	Pipe TBE, 1 x 5-3/8

DISCHARGE, 9853Q W/SOLENOID VALVE, 097610-115V; 097629-230V

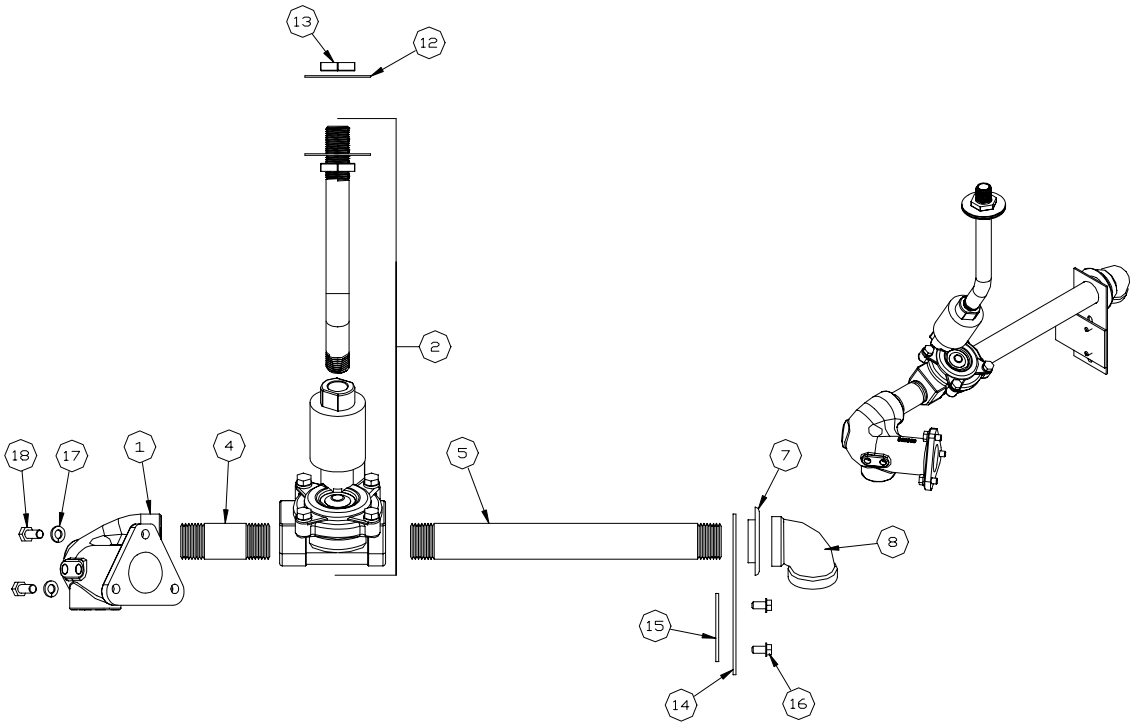

Item	Part No.	Description
1	006586	Discharge Casting, 1"
2	067204	VL Solenoid Assy., 1" 2Stg to Cond, 115V
	067205	VL Solenoid Assy., 1" 2Stg to Cond, 230V
4	044545	Pipe, TBE 1 x 3-1/4
5	044685	Pipe, TBE 1 x 11-3/8
7	028960	Grommet Discharge, 1"
8	024895	Elbow, 1 x 90
12	068445	Washer, 2.4 x .858 x .062 Stl Pl
13	039209	Locknut, 1/2 NPT Machined
14	015487	Bracket Discharge, 1" Pipe
15	015474	Bracket Discharge Lower
16	053919	Screw, 1/4-20 x 1/2 HH
17	068875	Washer, Lock Std Spring 5/16
18	051895	Screw, 5/16 x 18-3/4, HHC

DISCHARGE, 9853Q W/FILTER & SOLENOID VALVE, 097609-115V; 097628-230V

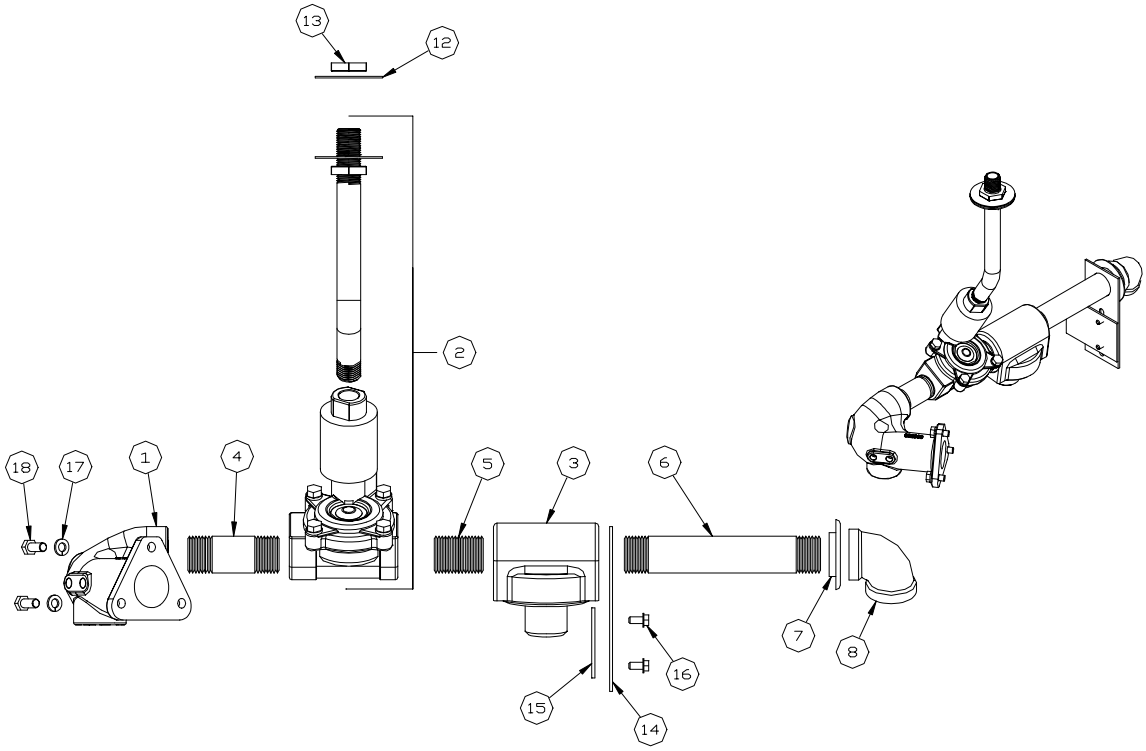

Item	Part No.	Description
1	006586	Discharge Casting, 1"
2	067204	VL Solenoid Assy., 1" 2Stg to Cond, 115V
	067205	VL Solenoid Assy., 1" 2Stg to Cond, 230V
3	003087	Adapter, 1" Cimtek 400 Filter
4	044545	Pipe, TBE 1 x 3-1/4
5	044512	Pipe, TBE, 1 x 1-3/4
6	044613	Pipe, TBE, 1 x 7
7	028960	Grommet Discharge, 1"
8	024895	Elbow, 1" x 90
12	068445	Washer, 2.4 x .858 x .062 Stl Pl
13	039209	Locknut, 1/2 NPT Machined
14	015487	Bracket Discharge, 1" Pipe
15	015474	Bracket Discharge Lower
16	053919	Screw, 1/4-20 x 1/2 HH
17	068875	Washer, Lock Std Spring 5/16
18	051895	Screw, 5/16 x 18-3/4, HHC

DISCHARGE, 9853QX W/SOLENOID VALVE & SATELLITE PIPE, 097614-115V; 097633-230V

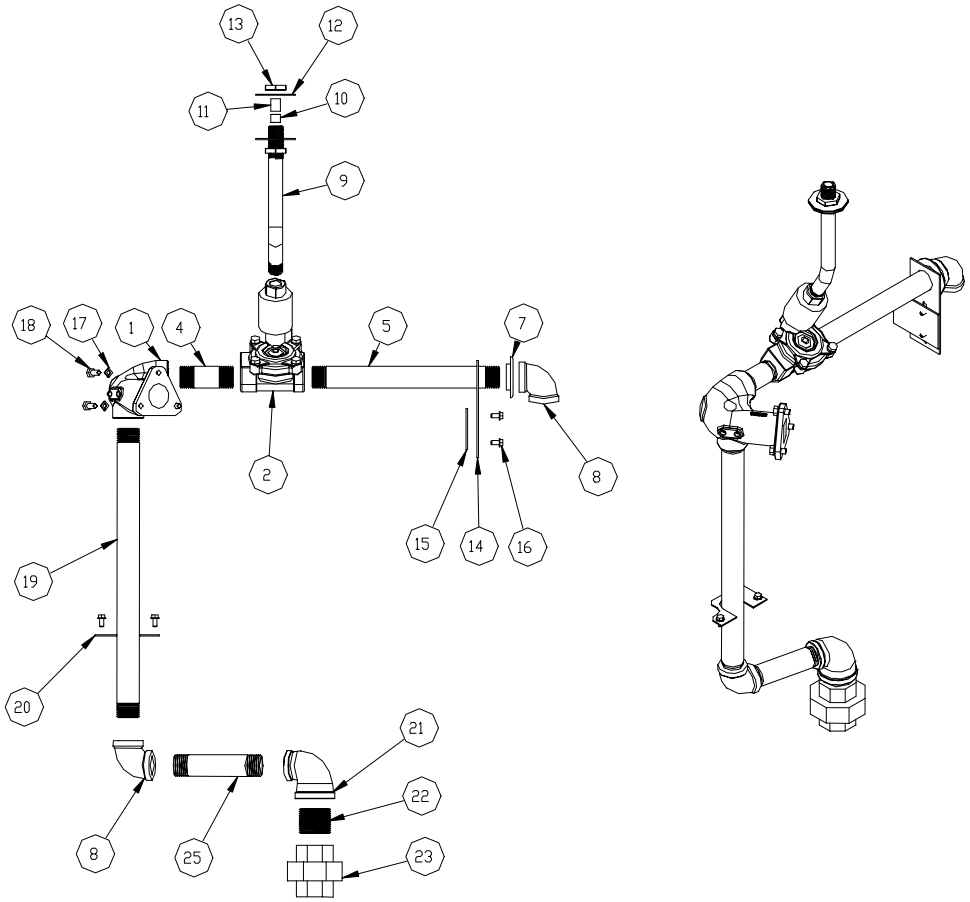

Item	Part No.	Description
1	004586	Discharge Casting, 1"
2	067204	VL Solenoid Assy., 1" 2Stg to Cond, 115V
	067205	VL Solenoid Assy., 1" 2Stg to Cond, 230V
4	044545	Pipe, TBE 1 x 3-1/4
5	044685	Pipe, TBE 1 x 11-3/8
7	028960	Grommet Discharge, 1"
8	024895	Elbow, 1" x 90
12	068445	Washer, 2.4 x .858 x .062 Stl Pl
13	039209	Locknut, 1/2 NPT Machined
14	015487	Bracket Discharge, 1" Pipe

Item	Part No.	Description
15	015474	Bracket Discharge Lower
16	053919	Screw, 1/4-20 x 1/2 HH
17	068875	Washer, Lock Std Spring 5/16
18	051895	Screw, 5/16 x 18-3/4, HHC
19	044681	Pipe, TBE 1 x 17-1/2
20	014857	Bracket, Sat Pipe Guide
21	024936	Elbow, 1-1/2 x 1 x 90
22	038005	Pipe, TBE 1-1/2 x 1-3/4, Close
23	066385	Union, 1-1/2" NPT
24	024895	Elbow, 1 x 90
25	044579	Pipe TBE, 1 x 5-3/8

DISCHARGE, 9853QX W/FILTER, SOLENOID VALVE, SATELLITE PIPE, 097613-115V; 097632-230V

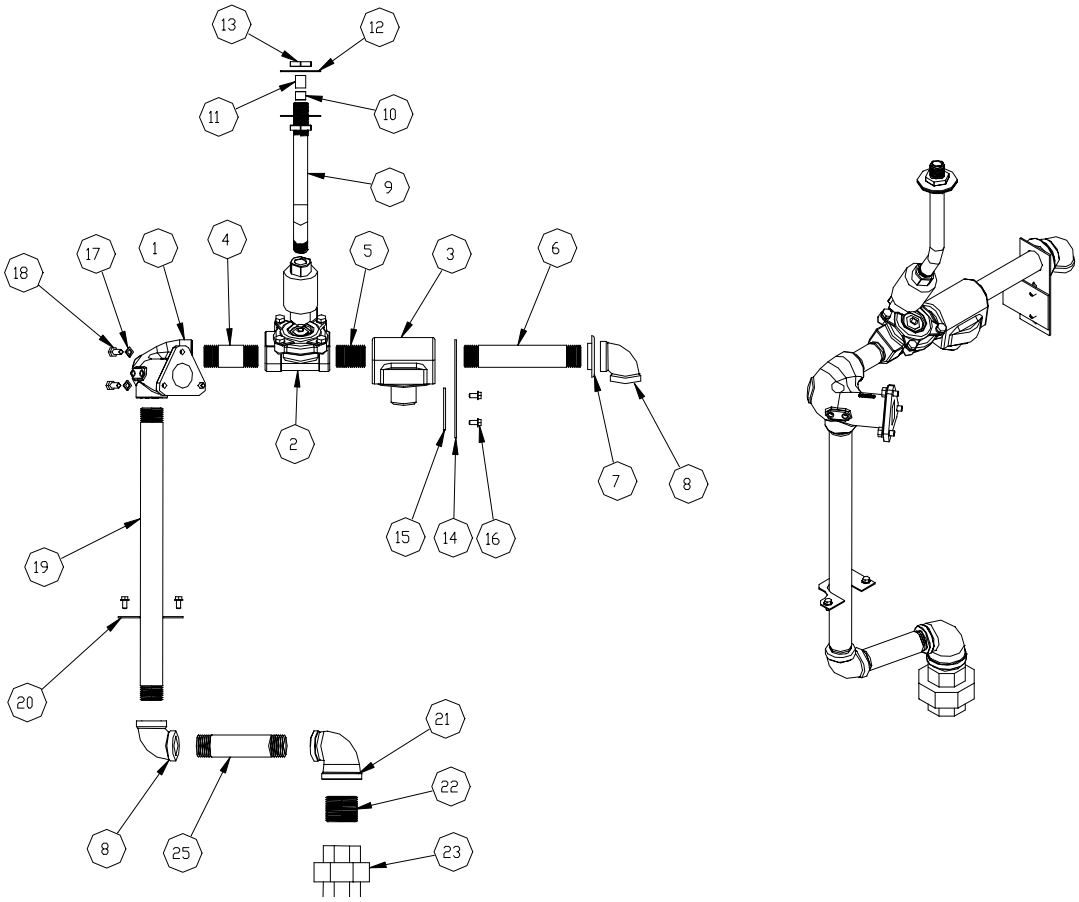

Item	Part No.	Description	Item	Part No.	Description
1	004586	Discharge Casting, 1"	14	015487	Bracket Discharge, 1" Pipe
2	067204	VL Solenoid Assy., 1" 2Stg to Cond, 115V	15	015474	Bracket Discharge Lower
	067205	VL Solenoid Assy., 1" 2Stg to Cond, 230V	16	053919	Screw, 1/4-20 x 1/2 HH
3	003087	Adapter, 1" Cimtek 400 Filter	17	068875	Washer, Lock Std Spring 5/16
4	044545	Pipe, TBE 1 x 3-1/4	18	051895	Screw, 5/16 x 18-3/4, HHC
5	044512	Pipe, TBE, 1 x 1-3/4	19	044681	Pipe, TBE, 1 x 17-1/2
6	044613	Pipe, TBE, 1 x 7	20	014857	Bracket, Sat Pipe Guide
7	028960	Grommet Discharge, 1"	21	024936	Elbow, 1-1/2 x 1 x 90
8	024895	Elbow, 1" x 90	22	038005	Pipe, TBE 1-1/2 x 1-3/4, Close
12	068445	Washer, 2.4 x .858 x .062 Stl Pl	23	066385	Union, 1-1/2" NPT
13	039209	Locknut, 1/2 NPT Machined	25	044579	Pipe TBE, 1 x 5-3/8

DISCHARGE, 9853QTW2/1M W/SOLENOID VALVE, 097602-115V; 097621-230V

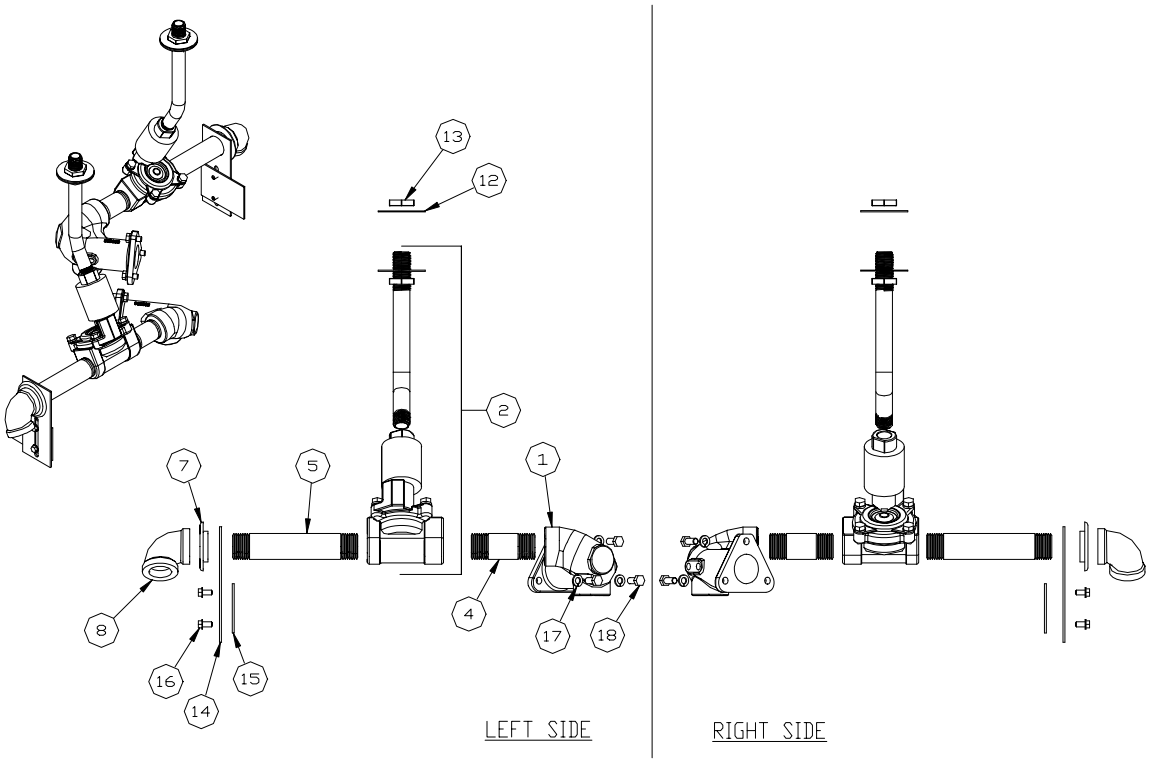

Item	Part No.	Description
1	006586	Discharge Casting, 1"
2	067204	VL Solenoid Assy., 1" 2Stg to Cond, 115V
	067205	VL Solenoid Assy., 1" 2Stg to Cond, 230V
4	044525	Pipe, TBE 1 x 3
5	044606	Pipe, TBE 1 x 6-3/4
7	028960	Grommet Discharge, 1"
8	024895	Elbow, 1" x 90
12	068445	Washer, 2.4 x .858 x .062 Stl Pl
13	039209	Locknut, 1/2 NPT Machined
14	015487	Bracket Discharge, 1" Pipe
15	015474	Bracket Discharge Lower
16	053919	Screw, 1/4-20 x 1/2 HH
17	068875	Washer, Lock Std Spring 5/16
18	051895	Screw, 5/16 x 18-3/4, HHC

DISCHARGE, 9853QTW2/1M W/FILTER & SOLENOID VALVE, 097601-115V, 097620-230V

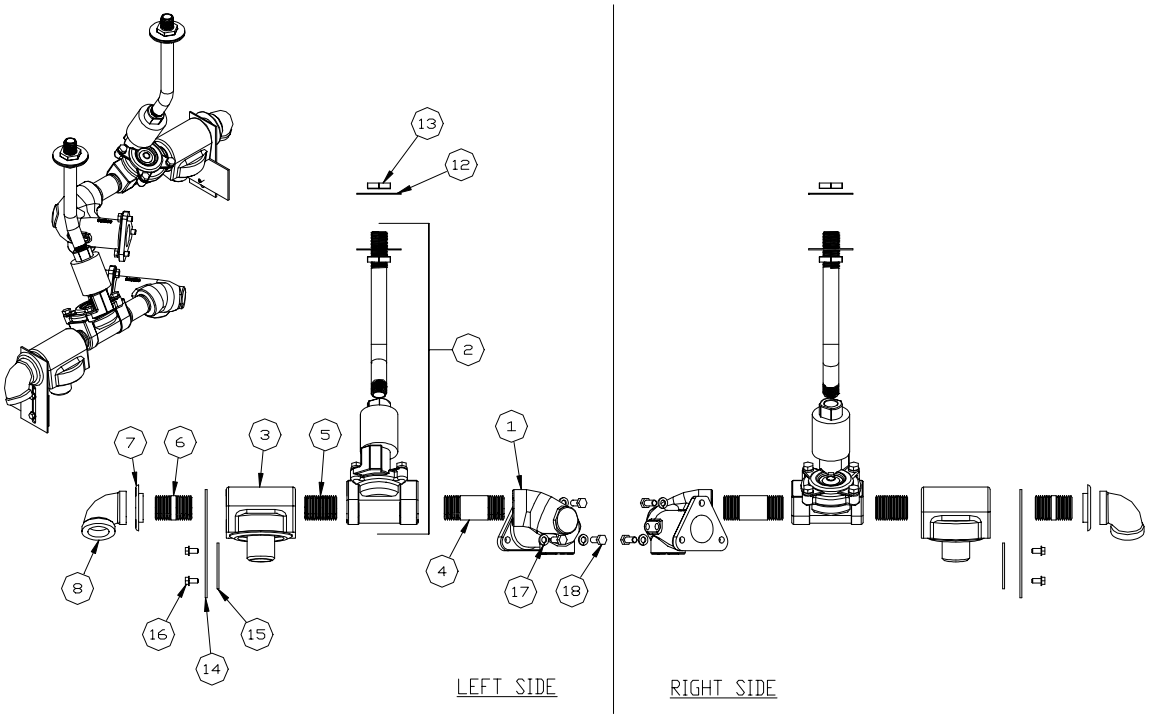

Item	Part No.	Description
1	006586	Discharge Casting, 1"
2	067204	VL Solenoid Assy., 1" 2Stg to Cond, 115V
	067205	VL Solenoid Assy., 1" 2Stg to Cond, 230V
3	003087	Adapter, 1" Cimtek 400 Filter
4	044525	Pipe, TBE 1 x 3
5	044512	Pipe, TBE 1 x 1-3/4
6	044515	Pipe, TBE 1 x 2-1/2
7	028960	Grommet Discharge, 1"
8	024895	Elbow, 1" x 90
12	068445	Washer, 2.4 x .858 x .062 Stl Pl
13	039209	Locknut, 1/2 NPT Machined
14	015487	Bracket Discharge, 1" Pipe
15	015474	Bracket Discharge Lower
16	053919	Screw, 1/4-20 x 1/2 HH
17	068875	Washer, Lock Std Spring 5/16
18	051895	Screw, 5/16 x 18-3/4, HHC

DISCHARGE, 9853QXTW W/SOLENOID VALVE & SATELLITE PIPE, 097606-115V; 097625-230V

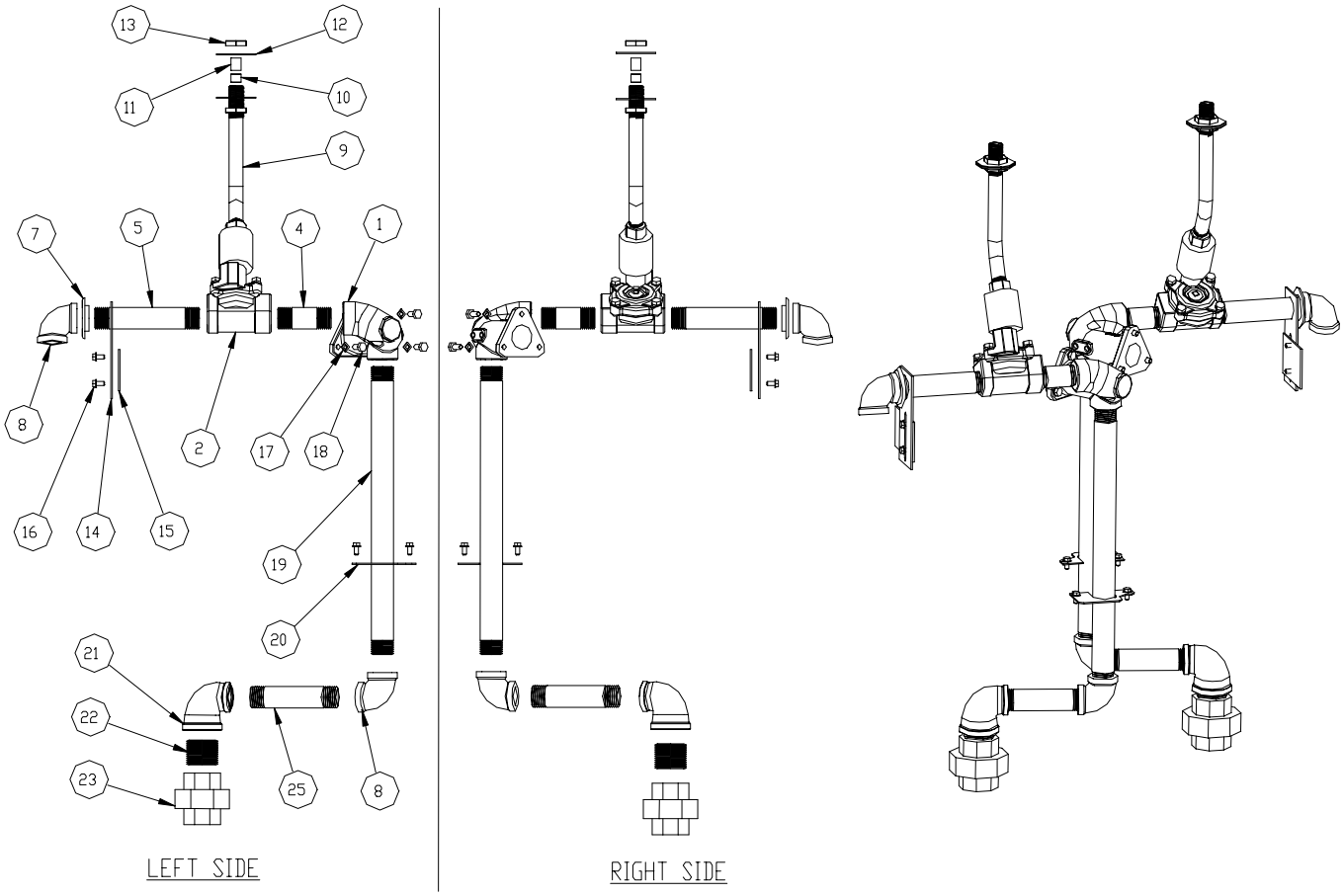

Item	Part No.	Description
1	004586	Discharge Casting, 1"
2	067204	VL Solenoid Assy., 1" 2Stg to Cond, 115V
	067205	VL Solenoid Assy., 1" 2Stg to Cond, 230V
4	044525	Pipe, TBE 1 x 3
5	044606	Pipe, TBE 1 x 6-3/4
7	028960	Grommet Discharge, 1"
8	024895	Elbow, 1" x 90
12	068445	Washer, 2.4 x .858 x .062 Stl Pl
13	039209	Locknut, 1/2 NPT Machined
14	015487	Bracket Discharge, 1" Pipe
15	015474	Bracket Discharge Lower
16	053919	Screw, 1/4-20 x 1/2 HH
17	068875	Washer, Lock Std Spring 5/16
18	051895	Screw, 5/16 x 18-3/4, HHC
19	044681	Pipe, TBE 1 x 17-1/2
20	014857	Bracket, Sat Pipe Guide
21	024936	Elbow, 1-1/2 x 1 x 90
22	038005	Pipe, TBE 1-1/2 x 1-3/4, Close
23	066385	Union, 1-1/2" NPT
25	044579	Pipe TBE, 1 x 5-3/8

DISCHARGE, 9853QXTW W/FILTER, SOLENOID VALVE, SATELLITE PIPE, 097605-115V; 097624-230V

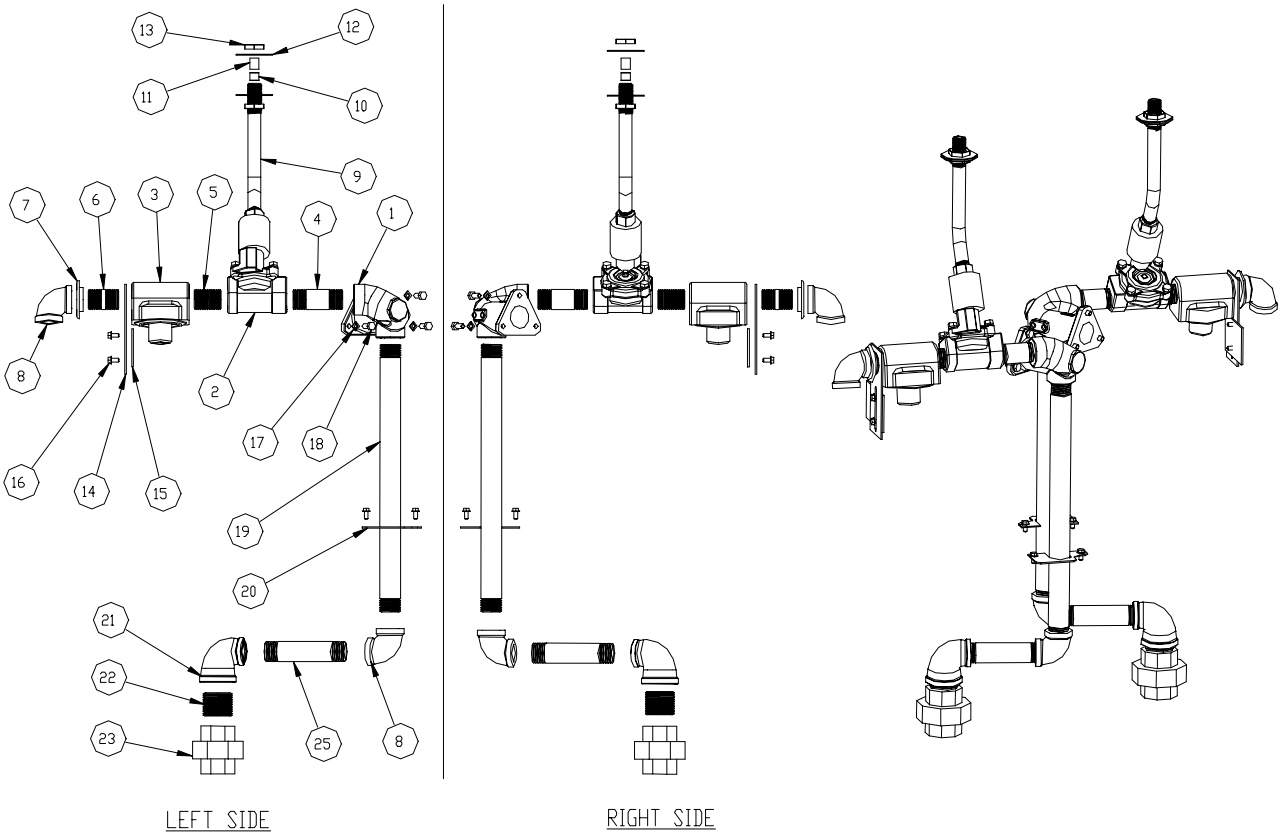

Item	Part No.	Description
1	004586	Discharge Casting, 1"
2	067204	VL Solenoid Assy., 1" 2Stg to Cond, 115V
	067205	VL Solenoid Assy., 1" 2Stg to Cond, 230V
3	003087	Adapter, 1" Cimtek 400 Filter
4	044525	Pipe, TBE 1 x 3
5	044512	Pipe, TBE, 1 x 1-3/4
6	044515	Pipe, TBE, 1 x 2-1/2
7	028960	Grommet Discharge, 1"
8	024895	Elbow, 1" x 90
12	068445	Washer, 2.4 x .858 x .062 Stl Pl
13	039209	Locknut, 1/2 NPT Machined
14	015487	Bracket Discharge, 1" Pipe
15	015474	Bracket Discharge Lower
16	053919	Screw, 1/4-20 x 1/2 HH
17	068875	Washer, Lock Std Spring 5/16
18	051895	Screw, 5/16 x 18-3/4, HHC
19	044681	Pipe, TBE, 1 x 17-1/2
20	014857	Bracket, Sat Pipe Guide
21	024936	Elbow, 1-1/2 x 1 x 90
22	038005	Pipe, TBE 1-1/2 x 1-3/4, Close
23	066385	Union, 1-1/2" NPT
25	044579	Pipe TBE, 1 x 5-3/8

DISCHARGE 9840Q, 097596

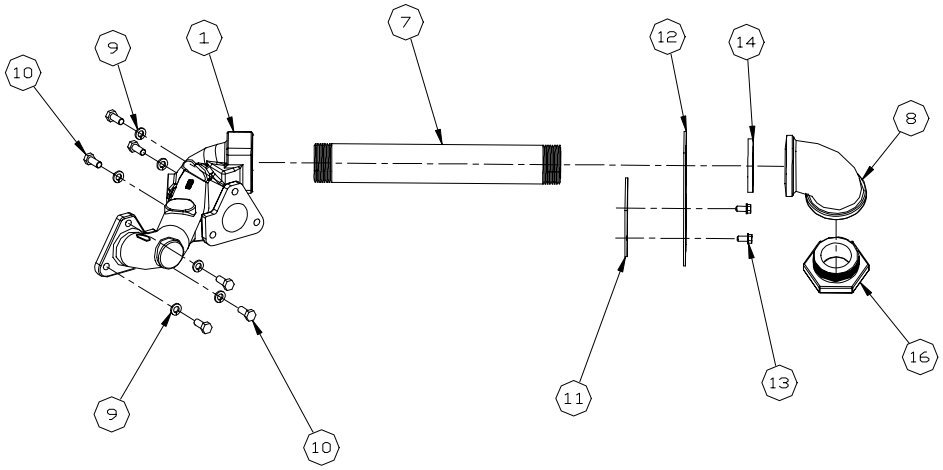

Item	Part No.	Description
1	006588	Discharge Casting
7	044944	Pipe, TBE 1-1/2 x 12-1/8
8	Z07941	Elbow, Red:1-1/2 x 1-1/4 x 90
9	068875	Washer, Lock Std Spring 5/16
10	051895	Screw, 5/16 x 18-3/4 HHC
11	015474	Bracket, Discharge Lower
12	015489	Bracket, Disch. 1-1/2 Pipe
13	053919	Screw, 1/4-20 x 1/2 HH
14	028975	Grommet, Discharge-150
16	017276	Red Bushing Hex, 1-1/4 x 1

DISCHARGE, 9852Q, 097572

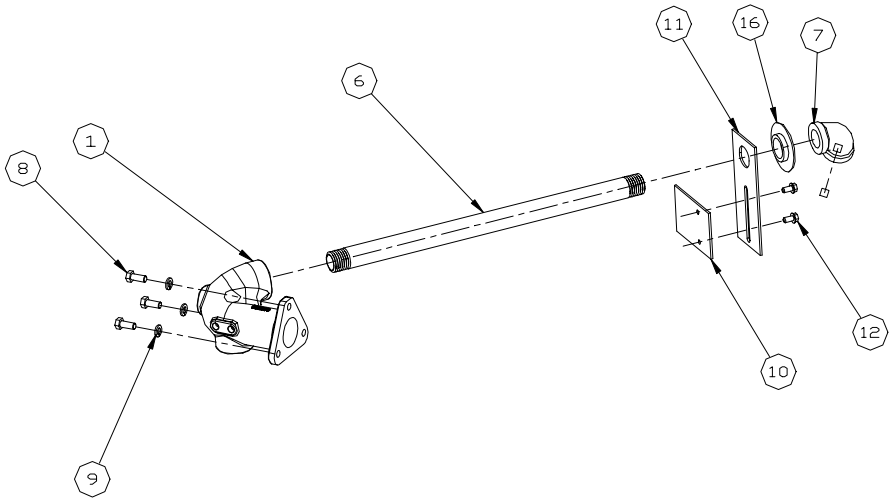

Item	Part No.	Description
1	010586	Discharge Casting, 3/4"
6	044118	Pipe, TBE 3/4 x 17-1/8
7	025955	Elbow, 3/4 x 90
8	051895	Screw, 5/16 x 18-3/4, HHC
9	068875	Washer, Lock Std Spring 5/16
10	015474	Bracket Discharge Lower
11	015488	Bracket Discharge, 3/4
12	053919	Screw, 1/4-20 x 1/2 HH
16	028930	Grommet Discharge, 3/4

DISCHARGE, 9852Q W/FILTER, 097571

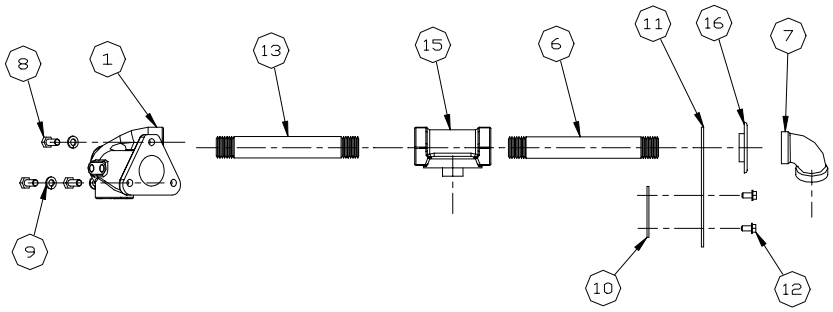

Item	Part No.	Description
1	010586	Discharge Casting, 3/4"
6	044116	Pipe, TBE 3/4 x 7-3/8
7	025955	Elbow, 3/4 x 90
8	051895	Screw, 5/16 x 18-3/4, HHC
9	068875	Washer, Lock Std Spring 5/16
10	015474	Bracket Discharge Lower
11	015488	Bracket Discharge, 3/4
12	053919	Screw, 1/4-20 x 1/2 HH
13	044090	Pipe, TBE 3/4 x 7
15	003043	Adapter-Filter, 3/4"
16	028930	Grommet Discharge, 3/4

DISCHARGE, 9852QTW2, 097560

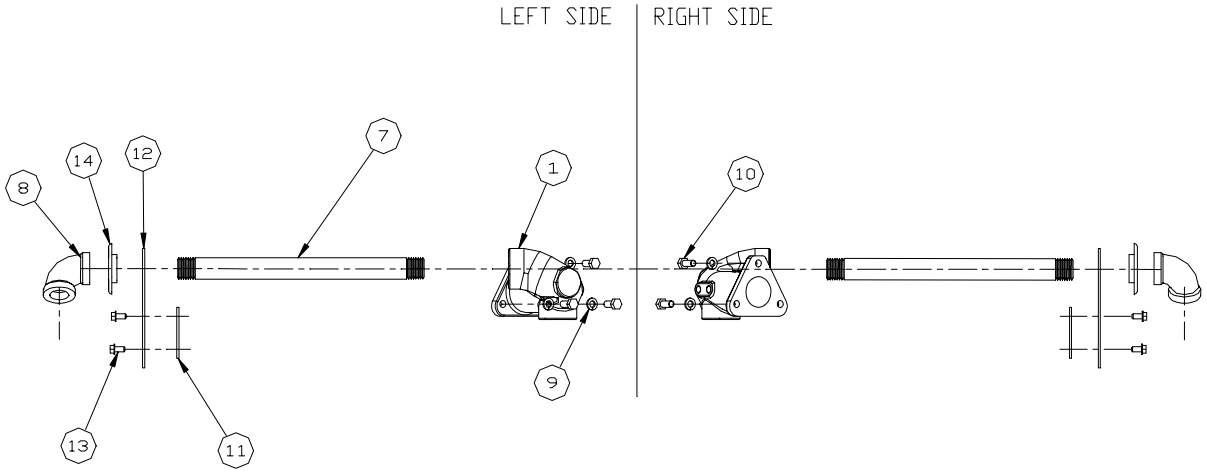

Item	Part No.	Description
1	010586	Discharge Casting, 3/4"
7	044112	Pipe, TBE 3/4 x 12-1/8
8	024955	Elbow, 3/4 x 90
9	068875	Washer, Lock Std Spring 5/16
10	051895	Screw, 5/16 x 18-3/4, HHC
11	015474	Bracket Discharge Lower
12	015488	Bracket Discharge, 3/4
13	053919	Screw, 1/4-20 x 1/2 HH
14	028930	Grommet Discharge, 3/4

DISCHARGE, 9852QTW2 W/FILTER, 097559

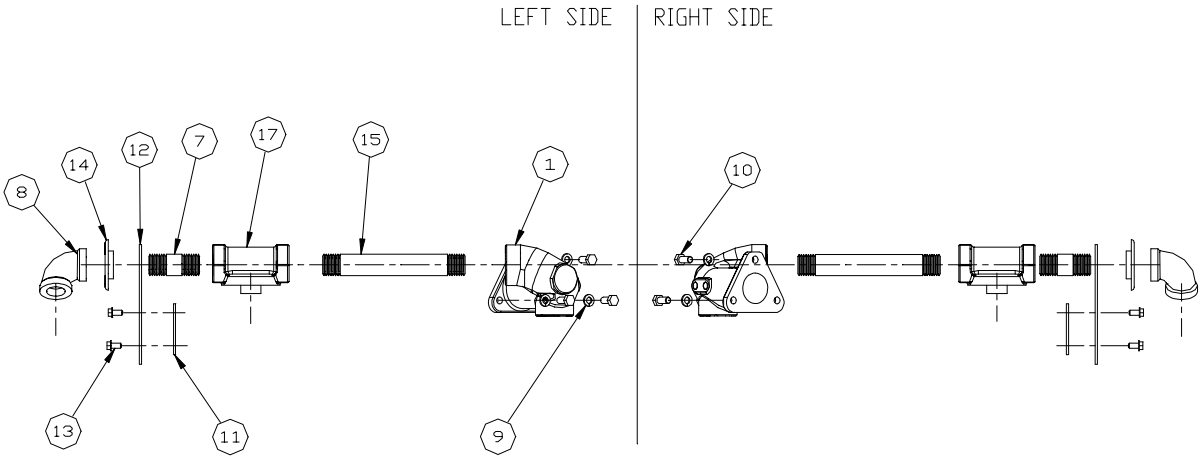

Item	Part No.	Description
1	010586	Discharge Casting, 3/4"
7	043975	Pipe, TBE 3/4 x 2-1/2
8	024955	Elbow, 3/4 x 90
9	068875	Washer, Lock Std Spring 5/16
10	051895	Screw, 5/16 x 18-3/4, HHC
11	015474	Bracket Discharge Lower
12	015488	Bracket Discharge, 3/4
13	053919	Screw, 1/4-20 x 1/2 HH
14	028930	Grommet Discharge, 3/4
15	044090	Pipe TBE 3/4 x 7
17	003043	Adapter-Filter 3/4"

DISCHARGE, 9853Q, 097554

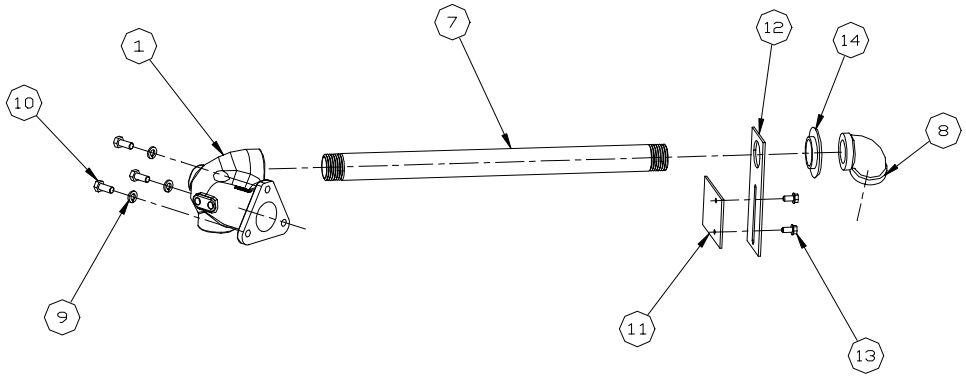

Item	Part No.	Description
1	006586	Discharge Casting, 1"
7	044679	Pipe, TBE 1 x 17-1/4
8	024895	Elbow, 1" x 90
10	051895	Screw, 5/16 x 18-3/4 HHC
11	015474	Bracket, Discharge Lower
12	015487	Bracket, Disch. 1" Pipe
13	053919	Screw, 1/4-20 x 1/2 HH
14	028975	Grommet, Discharge-150
16	068875	Washer, Lock Std Spring 5/16

DISCHARGE, 9853Q W/FILTER, 097553

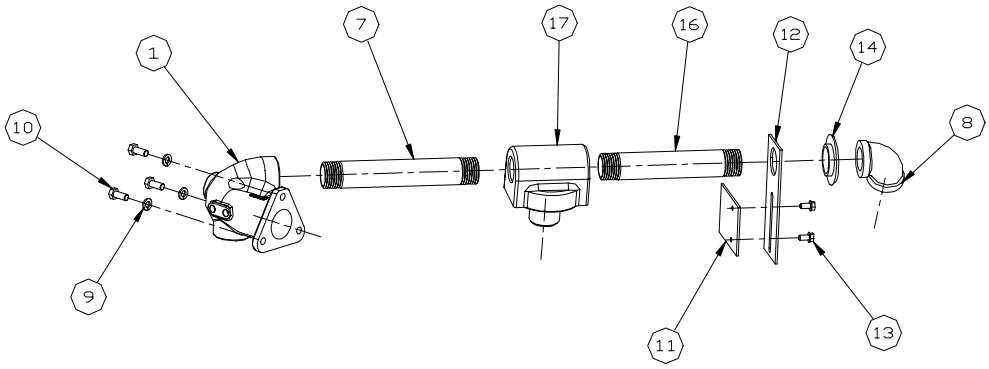

Item	Part No.	Description
1	006586	Discharge Casting, 1"
7	044683	Pipe, TBE 1 x 7-3/4
8	024895	Elbow, 1" x 90
9	068875	Washer, Lock Std Spring 5/16
10	051895	Screw, 5/16 x 18-3/4 HHC
11	015474	Bracket, Discharge Lower
12	015487	Bracket, Disch. 1" Pipe
13	053919	Screw, 1/4-20 x 1/2 HH
14	028960	Grommet, Discharge-1"
16	044613	Pipe, TBE, 1 x 7
17	003087	Adapter, 1" Cimtek 400 Filter

DISCHARGE, 9853QTW2/1M, 097549

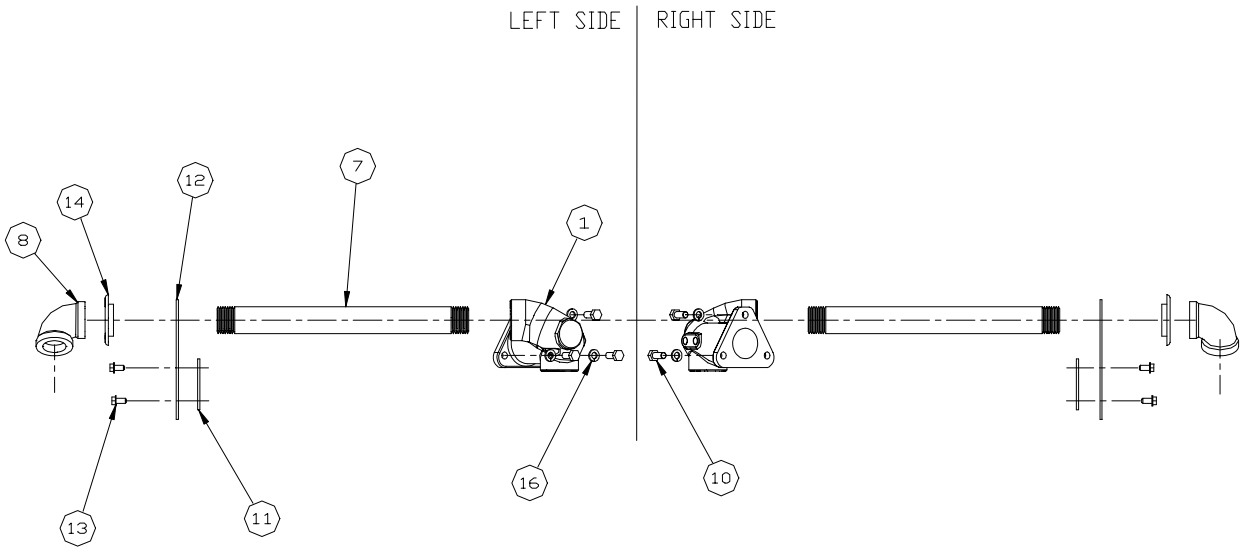

Item	Part No.	Description
1	006586	Discharge Casting, 1"
7	044678	Pipe, TBE 1 x 12-3/8
8	024895	Elbow, 1" x 90
10	051895	Screw, 5/16 x 18-3/4 HHC
11	015474	Bracket, Discharge Lower
12	015487	Bracket, Disch. 1" Pipe
13	053919	Screw, 1/4-20 x 1/2 HH
14	028960	Grommet, Discharge-1"
16	068875	Washer, Lock Std Spring 5/16

DISCHARGE, 9853QTW2/1M W/FILTER, 097548

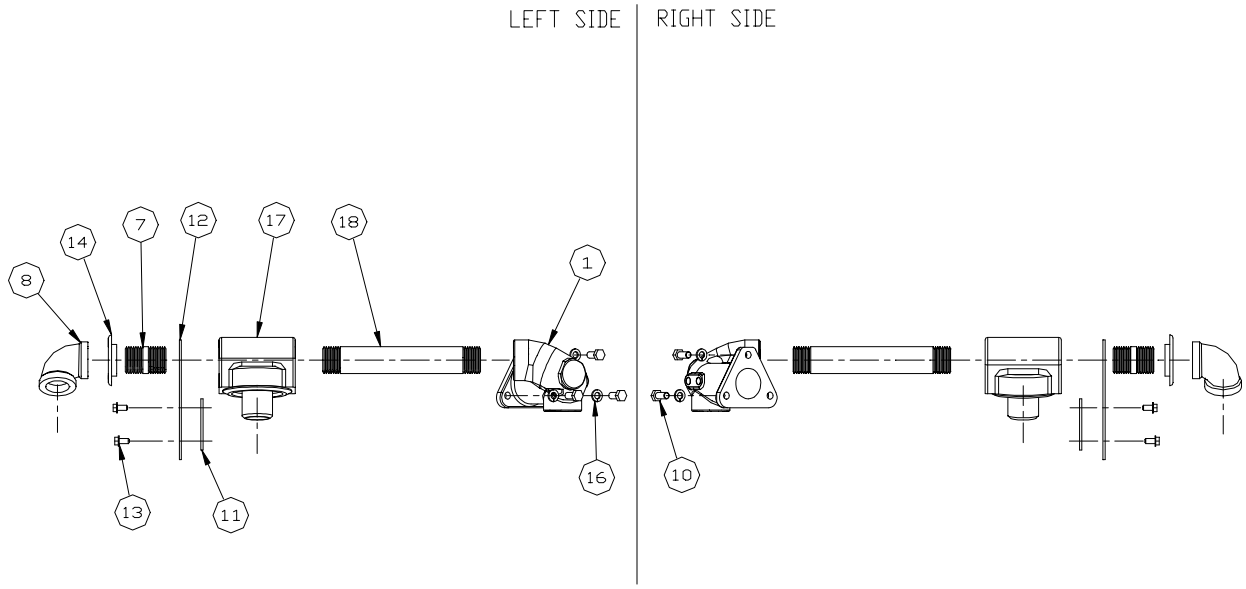

Item	Part No.	Description
1	006586	Discharge Casting, 1"
7	044515	Pipe, TBE 1 x 2-1/2
8	024895	Elbow, 1" x 90
10	051895	Screw, 5/16 x 18-3/4 HHC
11	015474	Bracket, Discharge Lower
12	015487	Bracket, Disch. 1" Pipe
13	053919	Screw, 1/4-20 x 1/2 HH
14	028960	Grommet, Discharge-1"
16	068875	Washer, Lock Std Spring 5/16
17	003087	Adapter, 1" Cimtek 400 Filter
18	044614	Pipe, TBE 1 x 7-1/2

HIGH HOSE RETRIEVER

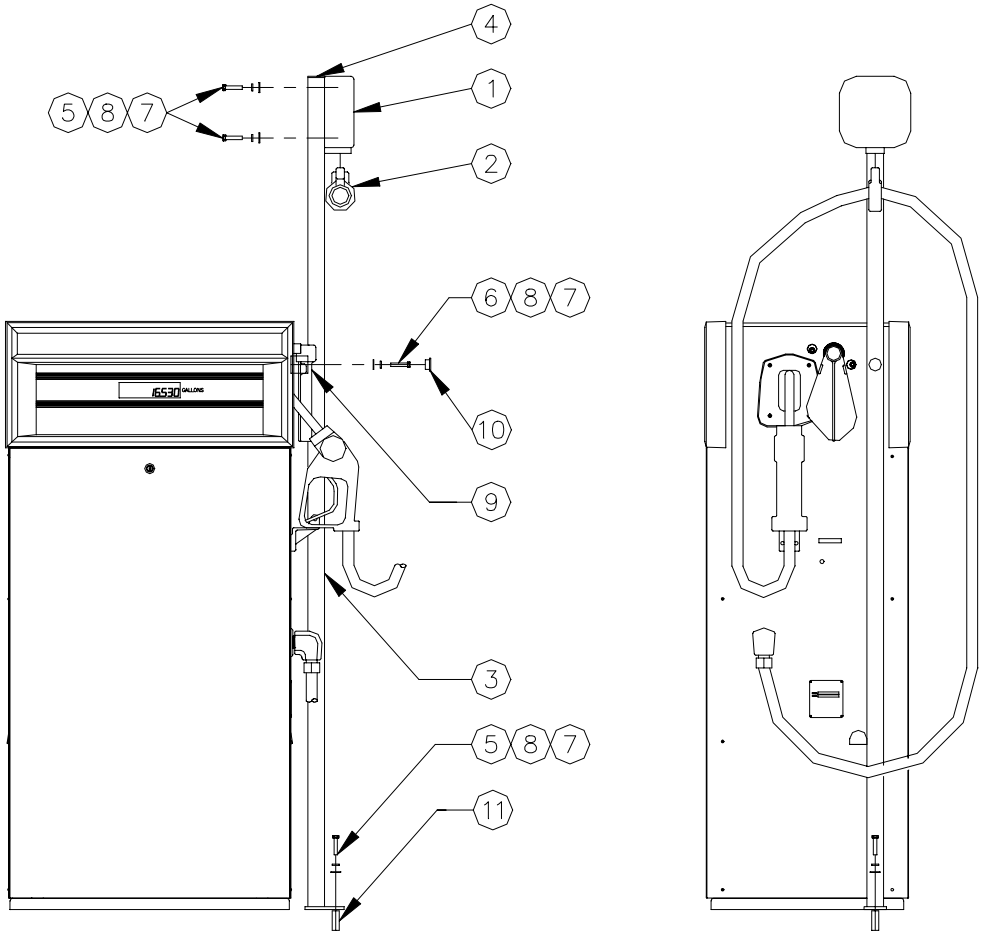

Complete High Hose Retriever installation requires a support post kit and a hose clamp/spring reel kit.

032177 Support Post Kit (Contains post and hardware: Items 3-11 below)

Hose Clamp/Spring Reel Kits (HW=hardwall; SW=softwall; VR=vapor recovery)

032666 Kit, 5/8" HW/SW (1" OD)
032663 Kit, 3/4" Dayco HW (1-1/8" OD)
032668 Kit, 1" Dayco HW (1-7/16 OD)
032671 Kit, HHR, Goodyear Prem, VR, Coaxial
032659 Kit, 3/4" HW/SW (1-1/32" OD)
032667 Kit, 1" SW (1-1/2" OD)
032669 Kit, 1" HW (1-3/8 OD)

Item	Part No.	Description
1	030804	Reel Assy, 5/8" & 3/4" HW/SW
	030805	Reel Assy, 1" SW, 1" HW; 1-1/4" SW; GY Prem Coax, VR
2	020714	Clamp, 5/8" HW/SW
	020712	Clamp, 1" SW
	020718	Clamp, 1" HW (1-7/16 OD)
	020719	Clamp, 1" HW (1-3/8 OD)
	026732	Clamp, GY Prem Coax, VR
	020721	Clamp, 3/4" Dayco HW
	020722	Clamp, 3/4" Dayco HW/SW
3	063838	Support Bar Assy.
4	017930	Caplug
5	051956	Bolt, 5/16-18 x 2, SS
6	051971	Bolt, 5/16-18 x 4-1/4, Pl
7	068079	Washer, 5/16, SS
8	068874	Lockwasher, 5/16, SS
9	063200	Spacer
	063201	Spacer, 9840Q
10	047219	Plug Button, 7/8
11	013250	Anchor

HOUSING MODULE, SINGLE

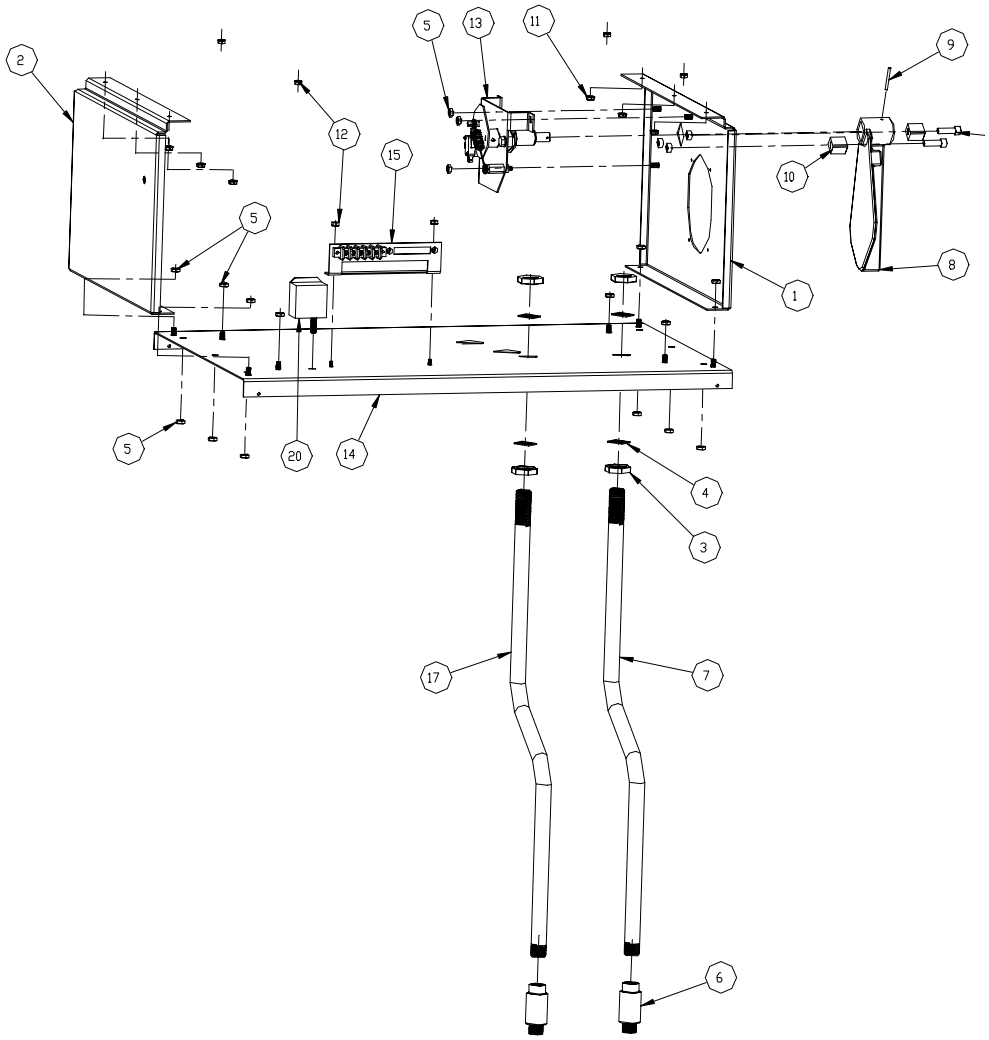

Item	Part No.	Description
1	022537	Frame, Top Side, 9800Q w/Boot
2	022538	Frame, Top Side, 9800Q Blank
3	039209	Locknut, 1/2 NPT machined
4	068443	Washer, 1/2" Conduit
5	038905	Nut, 1/4-20 Hex Selflock
6	066400	1/2 UNY Explosion-proof conduit union
7	079001	Conduit, Assy, AC, 98Q Single
8	003347	Lever Control
9	042657	Pin, roll SZ-125-1.375
10	063204	Stop, Eccentric, Plastic
11	Z09273	Nut, Hex Keps, 10-32
12	039070	Nut, Hex Keps, 8-32
13	045984	Reset Assy.
14	011394	Barrier Plate, 9800 Single
15	C06517	Cable/Bracket Assy., Solenoid, Single
16	053111	Screw, 5/16 x 18 x 1 Soc Hd Cap
17	079009	Conduit Assembly, DC 98Q Standard
	079010	Conduit Assembly, DC 98Qw/TopKAT

HOUSING MODULE, SINGLE AND TWIN FRONT LOAD

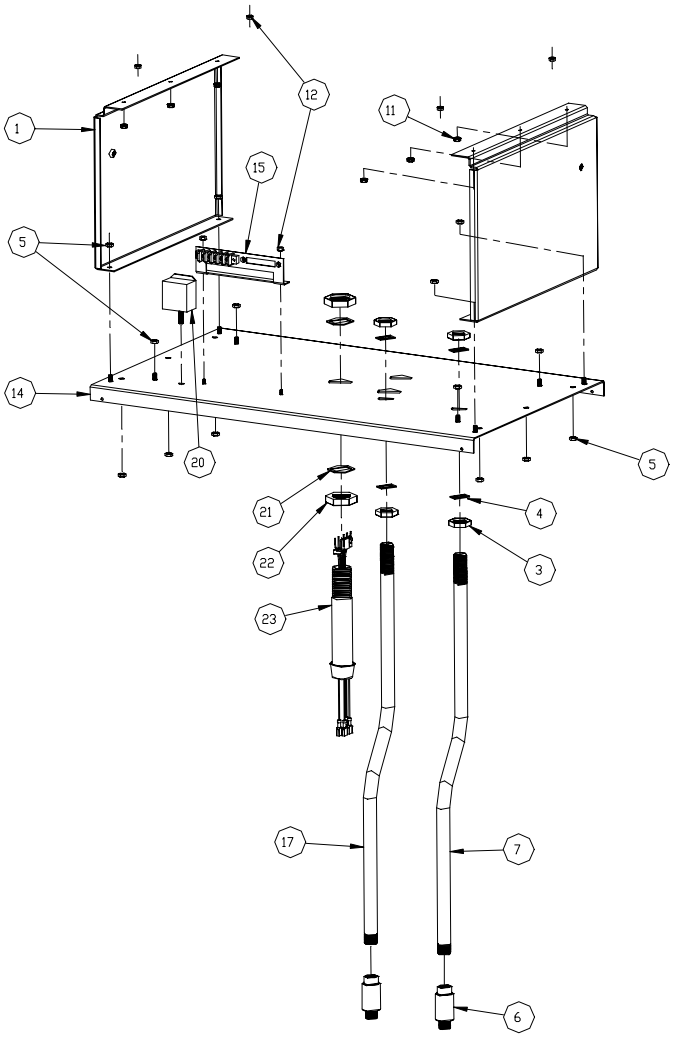

Item	Part No.	Description
1	022538	Frame, Top Side, 9800Q Blank
3	039209	Locknut, 1/2 NPT machined
4	068443	Washer, 1/2" Conduit
5	038905	Nut, 1/4-20 Hex Selflock
	038860	Nut, 1/4-20 Hex Semi-Fin
6	066400	1/2 UNY Explosion-proof conduit union
7	079001	Conduit, Assy, AC, 98Q Front Load
	079006	Conduit Assy., AC1&AC2, 98QTW2/TW1M
11	Z09273	Nut, Hex Keps, 10-32
12	039070	Nut, Hex Keps, 8-32
13	045984	Reset Assy.
14	011401	Barrier Plate, 98Q, Front Load
	011400	Barrier Plate, 98QTW2, Front Load
15	C06517	Cable/Bracket Assy., Solenoid, Front Load
	C06518	Cable/Bracket Assy., Solenoid, Twin
17	079009	Conduit Assembly, DC 98Q Standard
		079010 Conduit Assembly, DC 98Qw/TopKAT
21	068446	Washer, 1.353ID x 1.75OD x .06
22	039212	Locknut, 1" NPT machined
23	C06766	IS Barrier Assy.

HOUSING MODULE, TWIN

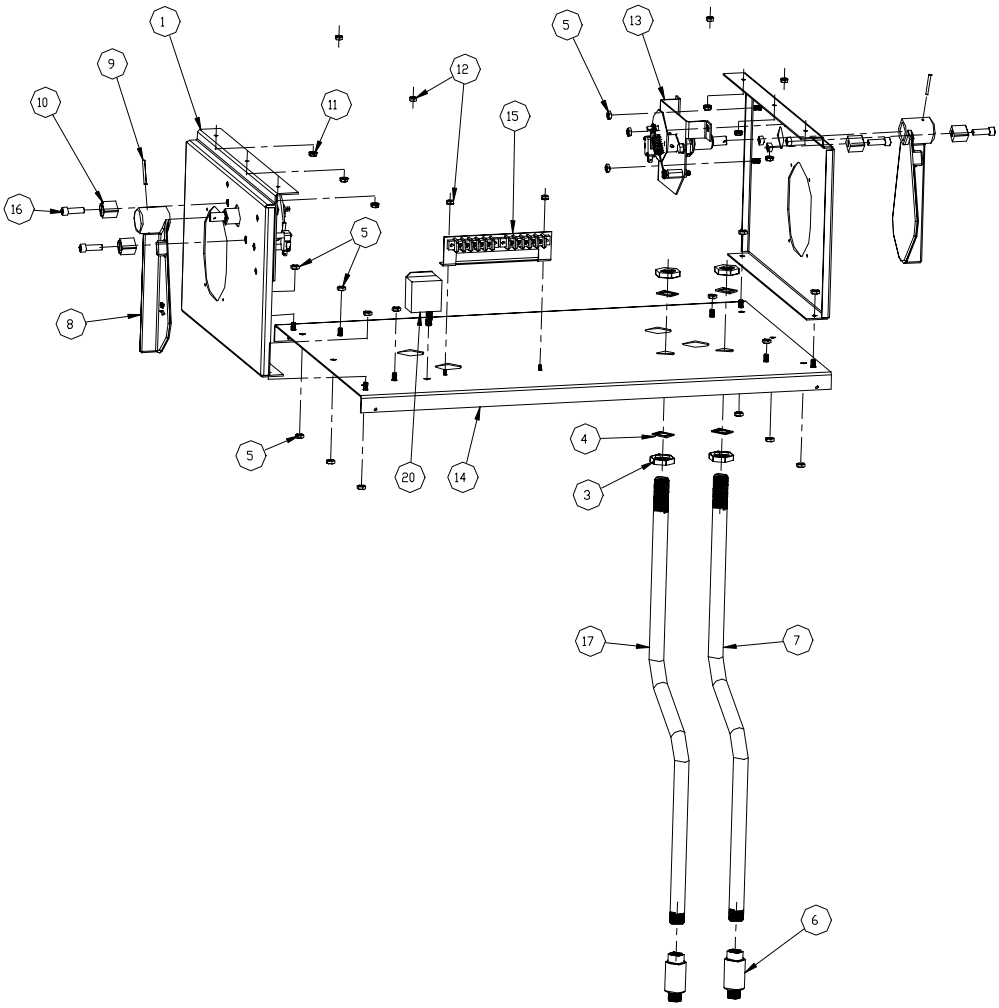

Item	Part No.	Description
1	022537	Frame, Top Side, 9800Q w/Boot
3	039209	Locknut, 1/2 NPT machined
4	068443	Washer, 1/2" Conduit
5	038905	Nut, 1/4-20 Hex Selflock
6	066400	1/2 UNY Explosion-proof conduit union
7	079006	Conduit Assy., AC1&AC2, 98QTW2/TW1M
8	003347	Lever Control
9	042657	Pin, roll SZ-125-1.375
10	063204	Stop, Eccentric, Plastic
11	Z09273	Nut, Hex Keps, 10-32
12	039070	Nut, Hex Keps, 8-32
13	045984	Reset Assy.
14	011393	Barrier Plate, 98Q, Front Load
15	C06518	Cable/Bracket Assy., Solenoid, Twin
16	053111	Screw, 5/16 x 18 x 1 Soc Hd Cap
17	079009	Conduit Assembly, DC 98Q Standard
	079010	Conduit Assembly, DC 98Qw/TopKAT

HOUSING MODULE, XTW

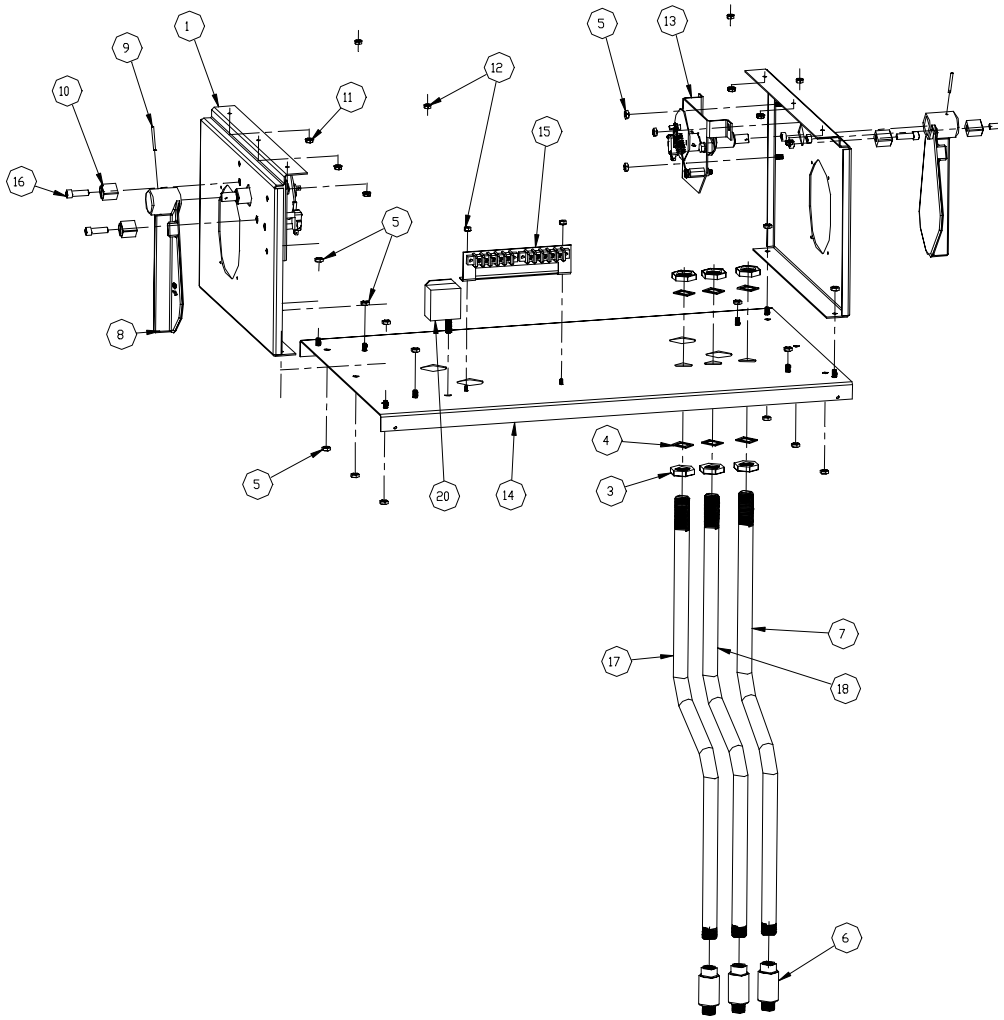

Item	Part No.	Description
1	022537	Frame, Top Side, 9800Q w/Boot
3	039209	Locknut, 1/2 NPT machined
4	068443	Washer, 1/2" Conduit
5	038905	Nut, 1/4-20 Hex Selflock
6	066400	1/2 UNY Explosion-proof conduit union
7	079007	Conduit Assy., AC1, 98QXTW
8	003347	Lever Control
9	042657	Pin, roll SZ-125-1.375
10	063204	Stop, Eccentric, Plastic
11	Z09273	Nut, Hex Keps, 10-32
12	039070	Nut, Hex Keps, 8-32
13	045984	Reset Assy.
14	011402	Barrier Plate, 98QXTW
15	C06518	Cable/Bracket Assy., Solenoid, Twin
16	053111	Screw, 5/16 x 18 x 1 Soc Hd Cap
17	079009	Conduit Assembly, DC 98Q Standard
	079010	Conduit Assembly, DC 98Qw/TopKAT
18	079008	Conduit Assembly, AC2, 98QXTW

METER, 9800Q SINGLE

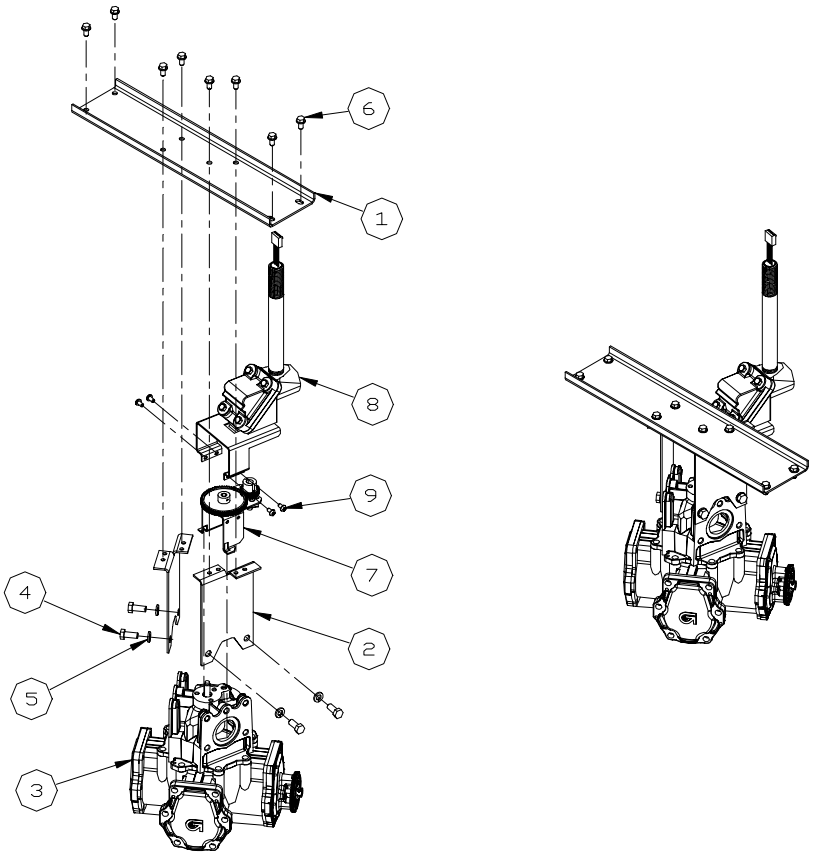

Item	Part No.	Description
1	046711	Bracket, Meter, 9800Q
2	046710	Bracket, Meter Mounting
3	035743	Meter, 4:1 Gallon
	035955	Meter, 2:1 Liter
4	051895	Screw, 5/16-18 x 3 /4 HHC
5	051976	Screw 3/8-24 x 3/4 HHC, ZP GR5 Self
6	068875	Washer, Lock, Std Spring, 5/16 Pl
7	028001	Gear Train Assy., Gallon
	028002	Gear Train Assy., Liter
8	068999	Conduit-Pulser Assembly, 9800Q
9	053017	Screw, 10-32 x 3/8 Pan Hd. Phiilips
10	068445	Washer, 2.4 x .858 x .062, conduit/vapor barrier (Not Shown)
11	039209	Locknut, 1/2 NPT machined, conduit/vapor barrier (Not Shown)

METER, 9800Q TWIN AND 9840Q

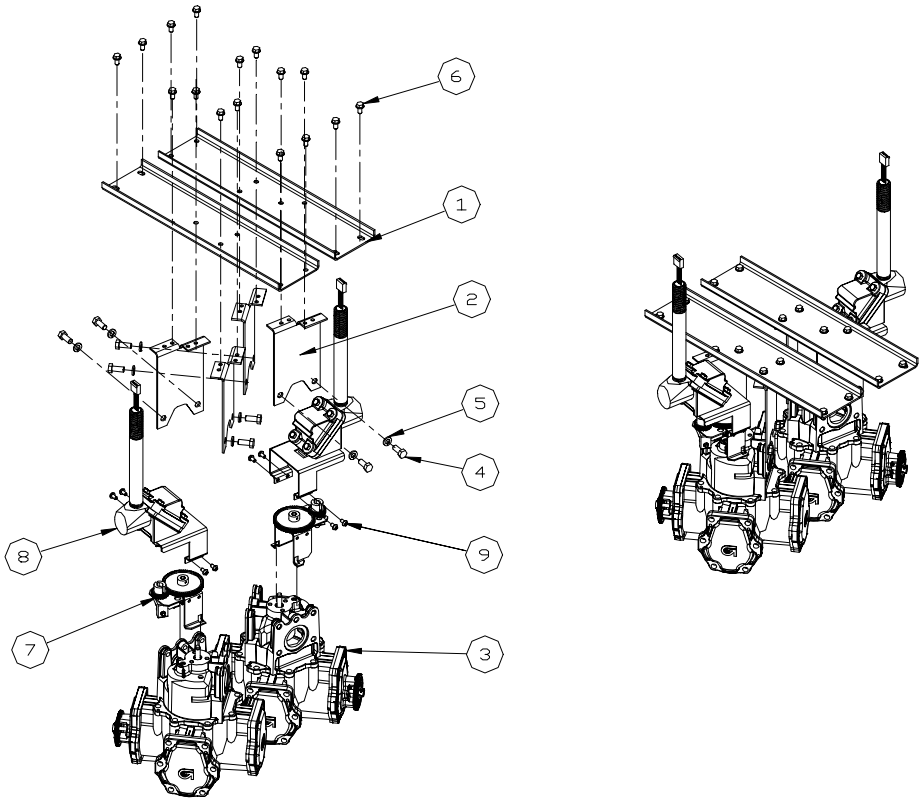

Item	Part No.	Description
1	046711	Bracket, Meter, 9800Q
2	046710	Bracket, Meter Mounting
3	035743	Meter, 4:1 Gallon
	035955	Meter, 2:1, Liter
4	051895	Screw, 5/16-18 x 3 /4 HHC
5	068875	Washer, Lock, Std Spring, 5/16 Pl
6	053919	Screw, 1/4-20 x 1/2 Hex Hd.
7	028001	Gear Train Assy., 9800Q Gallon
	028002	Gear Train Assy., 9800Q Liter
8	068999	Conduit-Pulser Assembly, 9800Q
9	053017	Screw, 10-32 x 3/8 Pan Hd. Phiilips
10	068445	Washer, 2.4 x .858 x .062, conduit/vapor barrier (Not Shown)
11	039209	Locknut, 1/2 NPT machined, conduit/vapor barrier (Not Shown)

METER BREAKDOWN

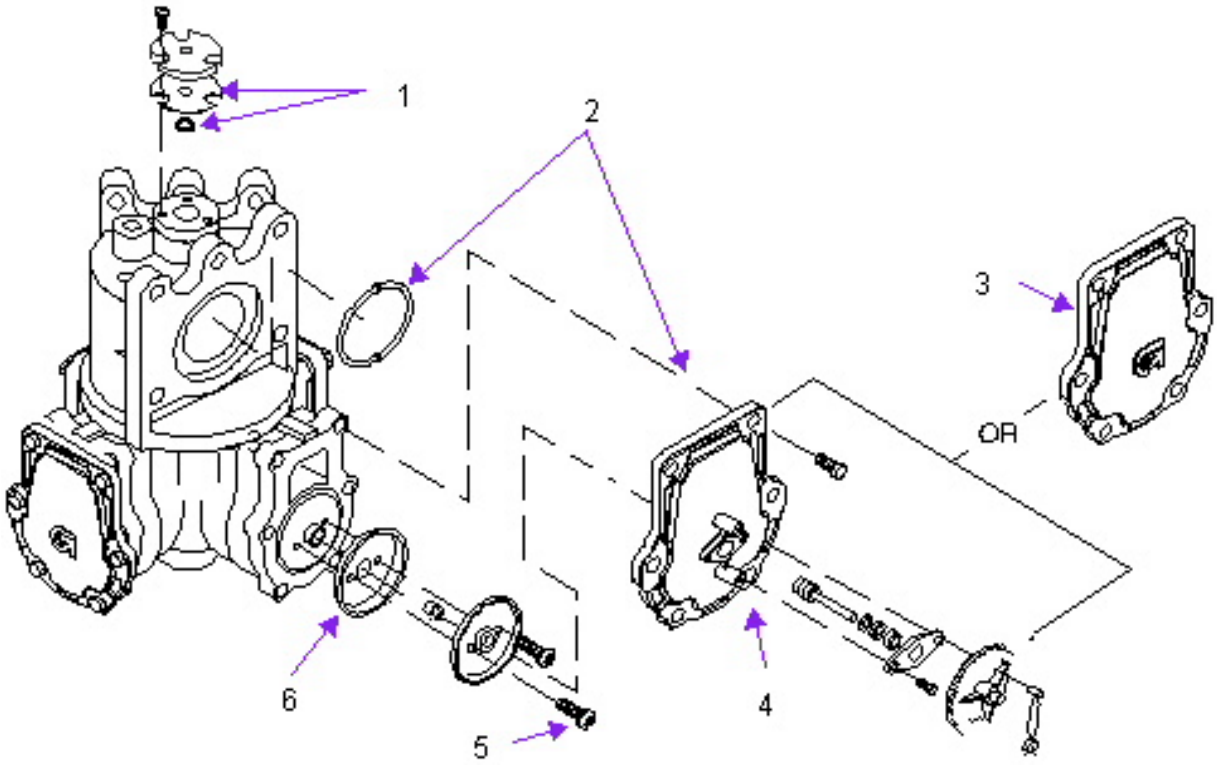

Item	Part No.	Description
1	063232	Quad Ring Kit (shaft seals, gaskets, alignment tools to service 10 meters)
2	063233	Gasket and O-Ring kit (cover gaskets, and O-rings, flange O-rings)
3	063234	Cylinder Cover, Plain
4	063235	Adjustment Screw and Cylinder Cover Assy.
5	063236	Screw, 10-32 x 5/8", SST
6	063237	Piston Cup, Formed
7	063238	Meter Check valve Kit (includes check valve, O-rings, adapter)

MOTOR MODULE, 9800Q, 9800QTW1

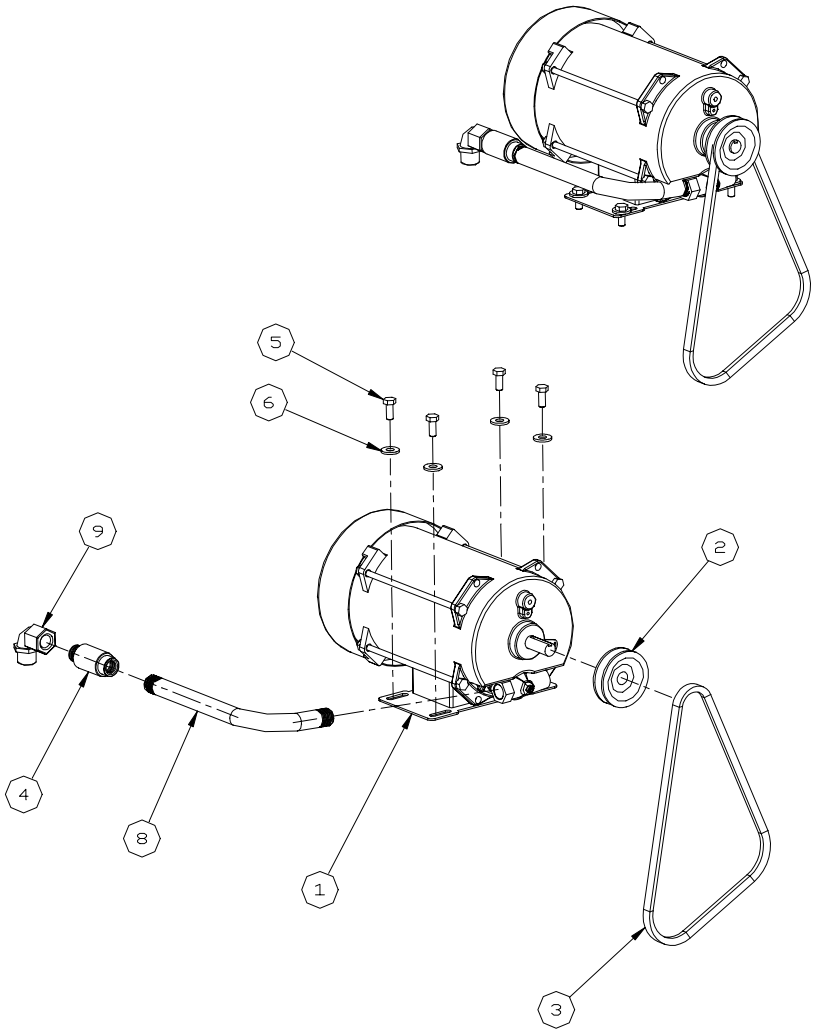

Item	Part No.	Description
1	F37351	Motor, 3/4HP, DVDF CCW, 61FR
2	047006	Pulley, 5/8 Bore, 2-3/4, 50 Hz.
	047005	Pulley, 5/8 Bore, 2.4, 60 Hz.
3	012148	Belt, 4L330-A31
4	066400	1/2" UNY Explosion-proof conduit union
5	052453	Screw, M8 1.25 x 20mm
6	068080	Washer, 5/16 plated
8	023937	Conduit, Bent Motor Single
	023954	Conduit, Bent Motor TW1
9	025045	Elbow, Conduit 1/2 x 90 M/F

MOTOR MODULE, 9800QTW2, 9800QTW1M, 9840Q

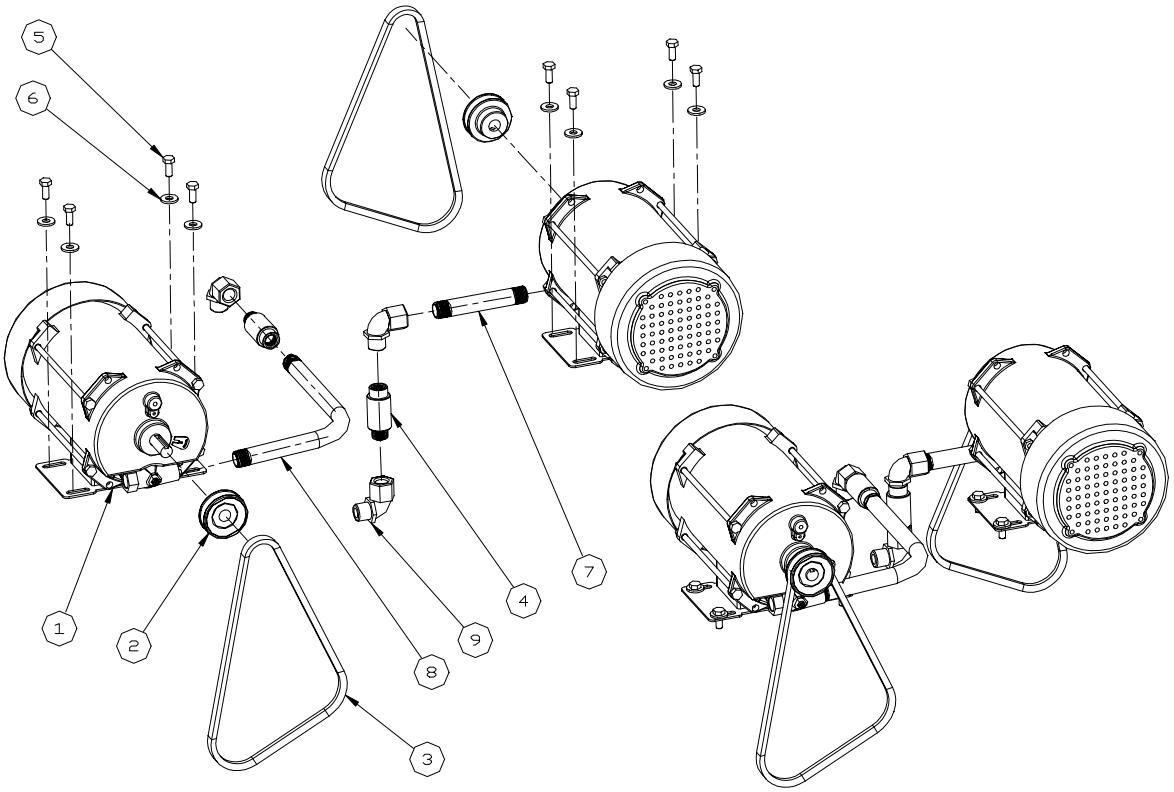

Item	Part No.	Description
1	F37351	Motor, 3/4HP, DVDF CCW, 61FR
2	047006	Pulley, 5/8 Bore, 2-3/4, 50 Hz.
	047005	Pulley, 5/8 Bore, 2.4, 60 Hz.
3	012148	Belt, 4L330-A31
4	066400	1/2" UNY Explosion-proof conduit union
5	052453	Screw, M8 1.25 x 20mm
6	068080	Washer, 5/16 plated
7	021523	Conduit, 1/2 x 4-7/8
8	023954	Conduit, Bent Motor Twin
9	025045	Elbow, Conduit 1/2 x 90 M/F

NOZZLE BOOT, FRONT LOAD OPTION

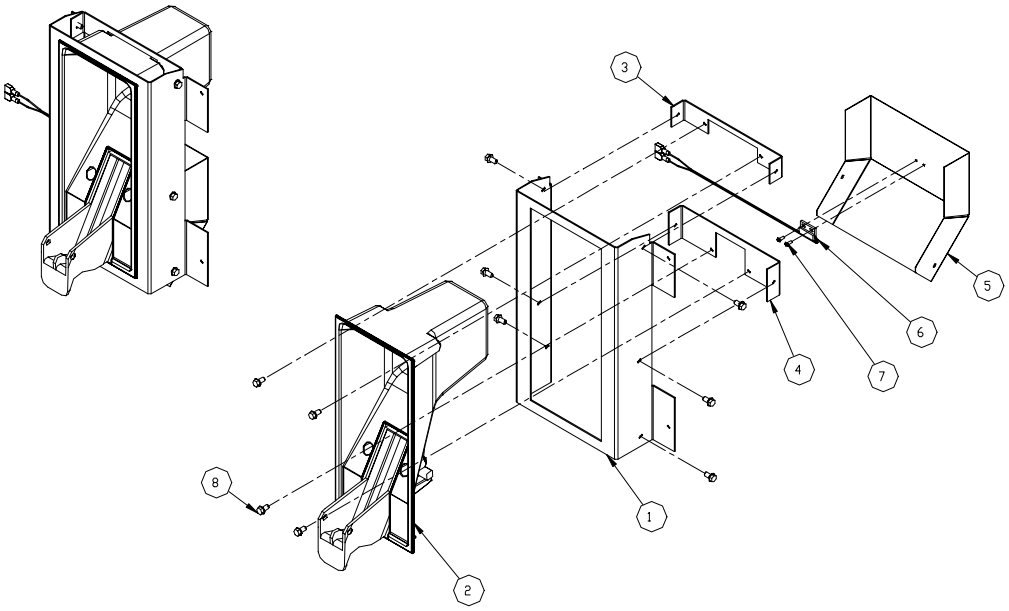

Item	Part No.	Description
1	041424	Bracket, Nozzle Boot
2	013658	Boot, Nozzle
3	041427	Bracket, Nozzle Boot Mounting, Upper
4	041428	Bracket, Nozzle Boot Mounting, Lower
5	041429	Bracket, Switch Mounting, Front Load
6	C04243	Sensor Assy., Nozzle Boot
7	053625	Screw, 6-32 x 3/8
8	053919	Screw, 1/4-20 x 1/2 Hex Hd

PLATFORM, ELECTRONIC

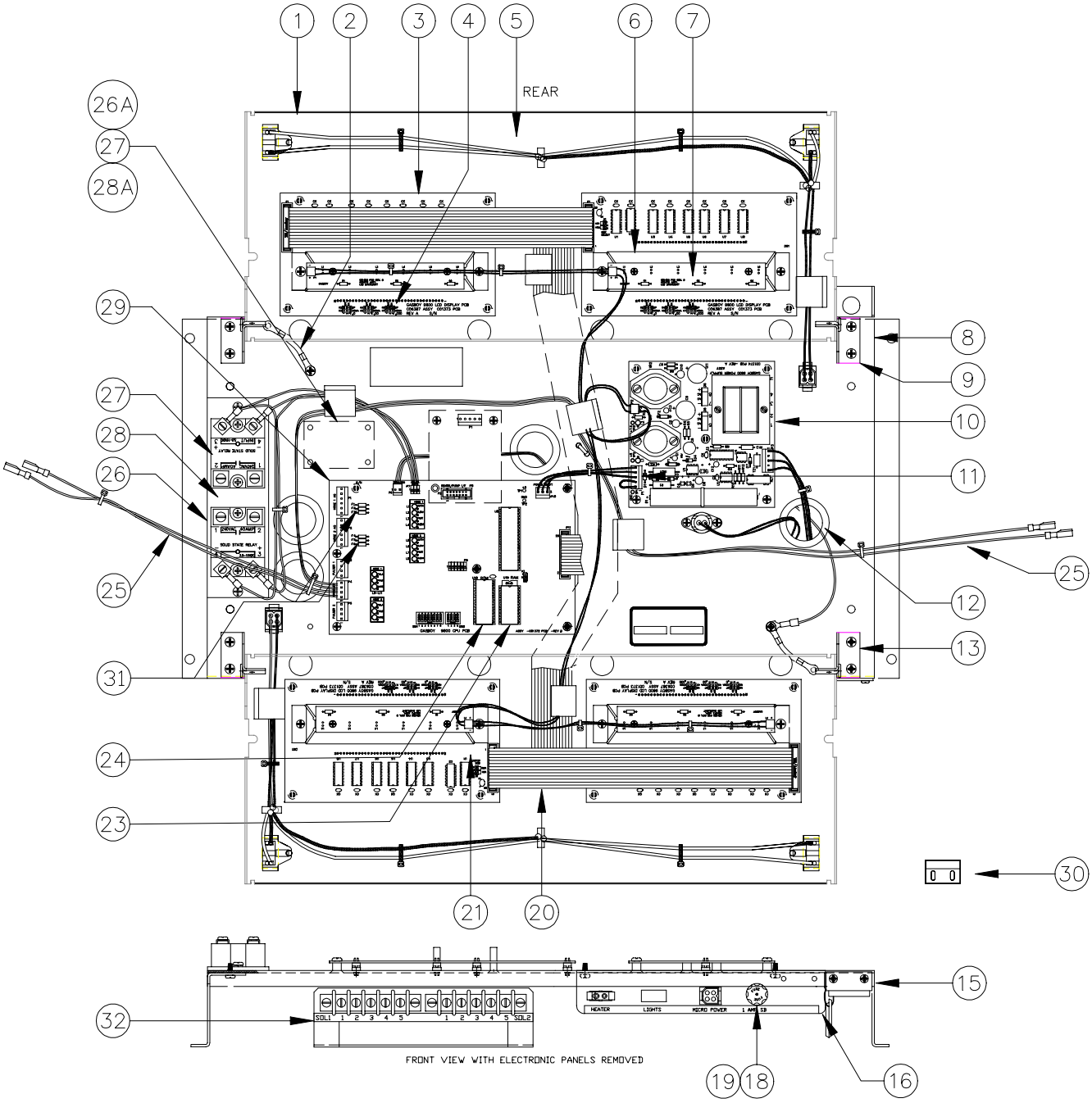

PLATFORM, ELECTRONIC

Pumps

Std	Front Load	
C06471	C07301	Single w/Battery, 115V
C06513	C07303	Single w/Battery, 230V
C07376	C07378	Single w/Battery, 380V
C06700	C07316	9840Q w/Battery, 115V
C06704	C07318	9840Q w/Battery, 230V
C07384	C07386	9840Q w/Battery, 380V
C06470	C07305	Twin w/Battery, 115V
C06509	C07307	Twin w/Battery, 230V
C07380	C07382	Twin w/Battery, 380V
C06473	C07302	Single w/o Battery, 115V
C06512	C07304	Single w/o Battery, 230V
C07375	C07377	Single w/o Battery, 380V
C06701	C07317	9840Q w/o Battery, 115V
C06705	C07319	9840Q w/o Battery, 230V
C07383	C07385	9840Q w/o Battery, 380V
C06472	C07306	Twin w/o Battery, 115V
C06508	C07308	Twin w/o Battery, 230V
C07379	C07381	Twin w/o Battery, 380V

Dispensers

Std	Front Load	
C06461	C07309	Single w/Battery, 115V
C06515	C07311	Single w/Battery, 230V
C06702	C07320	9840QX w/Battery, 115V
C06706	C07322	9840QX w/Battery, 230V
C06475	C07313	Twin w/Battery, 115V
C06511	C07314	Twin w/Battery, 230V
C06463	C07310	Single w/o Battery, 115V
C06514	C07312	Single w/o Battery, 230V
C06703	C07321	9840QX w/o Battery, 115V
C06707	C07323	9840QX w/o Battery, 230V
C06462	C07124	Twin w/o Battery, 115V
C06510	C07315	Twin w/o Battery, 230V

*In the list below, indicates this part is a sub-part of the preceding assembly

Item	Part No.	Description
1	Display Panel Assy.	
	C06464	Twin (shown)
	C06465	Single
	C06439	Blank, Front Load
2	*C06454	Cable Assy., Ground Strap
3	*C06387	PCB Assy., LCD Display
4	**C03315	Jumper, 2 Position Female
5	*C35395	Bracket Assy., Display - Twin
	*C35401	Bracket Assy., Display - Single
6	*C35399	Reflector, LED Backlight
7	*C06372	PCB Assy., LED Sale Backlight
8	C36000	Platform Assy.
9	*C35410	Bracket, Left Pivot Assy.
10	PCB Assy., Power Supply	
	*C06397	w/Battery, 115V
	*C06396	w/o Battery, 115V
	*C06489	w/Battery, 230V (Int'l only)
	*C06488	w/o Battery, 230V (Int'l only)
11	*C06679	Cable Assy, DC CPU Power
12	*C02827	Bushing, 1" Snap In
13	*C35408	Bracket, Right Pivot Assy
15	*C06003	Cable Assy., Totalizer
16	*C07707	Cable Assy., AC Power Bracket
18	**C02065	Fuse Holder, solder
	C09546	Fuse Holder, Quick Conn.
19	**C04044	Fuse, 1 Amp Slow Blow
20	Cable Assy., Display Ribbon	
	*C06453	Twin
	*C06455	Single, or Twin Front Load
	C06574	Single, Front Load
21	Cable Assy., LED Backlight Power	
	*C06431	Twin
	*C06430	Single, or Twin Front Load
	C06519	Single Front Load
23	*C01383	IC, RAM DS1220Y
24	*C06426	IC, Programmed PROM
	(NOTE: You must specify program name: 9800Q, 9840Q)	
25	Cable Assy., Handle Switch	
	*C06428	Twin
	*C06429	Single
26	*C06433	Relay Assy., Twin
	*C06899	Relay Assy., Twin, 380V
	*C06898	Relay Assy., Single, 380V
26A	*C06681	Relay Assy., Single
27	**C08746	Relay, Solid State
	**C09826	Relay, Solid State, 380V
28	**C34965	Bracket, Pump Relay , Twin & Single/Twin 380V
28A	**C35417	Bracket, Pump Relay, Single
	**C09827	Bracket, Pump Relay, 380V Twin
29	PCB Assy., CPU, 115 VAC	
	*C06392	Twin Pump
	*C06394	Twin Dispenser
	*C06391	Single Pump
	*C06393	Single Dispenser
	PCB Assy, CPU, 230 VAC	
	*C06501	Twin Pump
	*C06503	Twin Dispenser
	*C06500	Single Pump
	*C06502	Single Dispenser
30	C01342	Actuator, Electronic Totalizer
31	C09071	Fuse, 1Amp QB Pico Axial
32	C06518	Solenoid Cable/Bkt Assy. Twin
	C06517	Solenoid Cable/Bkt Assy. Sing.

NOTE: CPU Rev. H and above have 3 fuses (item 31) per hose outlet; prior versions have 1 fuse per hose outlet.

PLATFORM, ELECTRONIC - OPTIONS

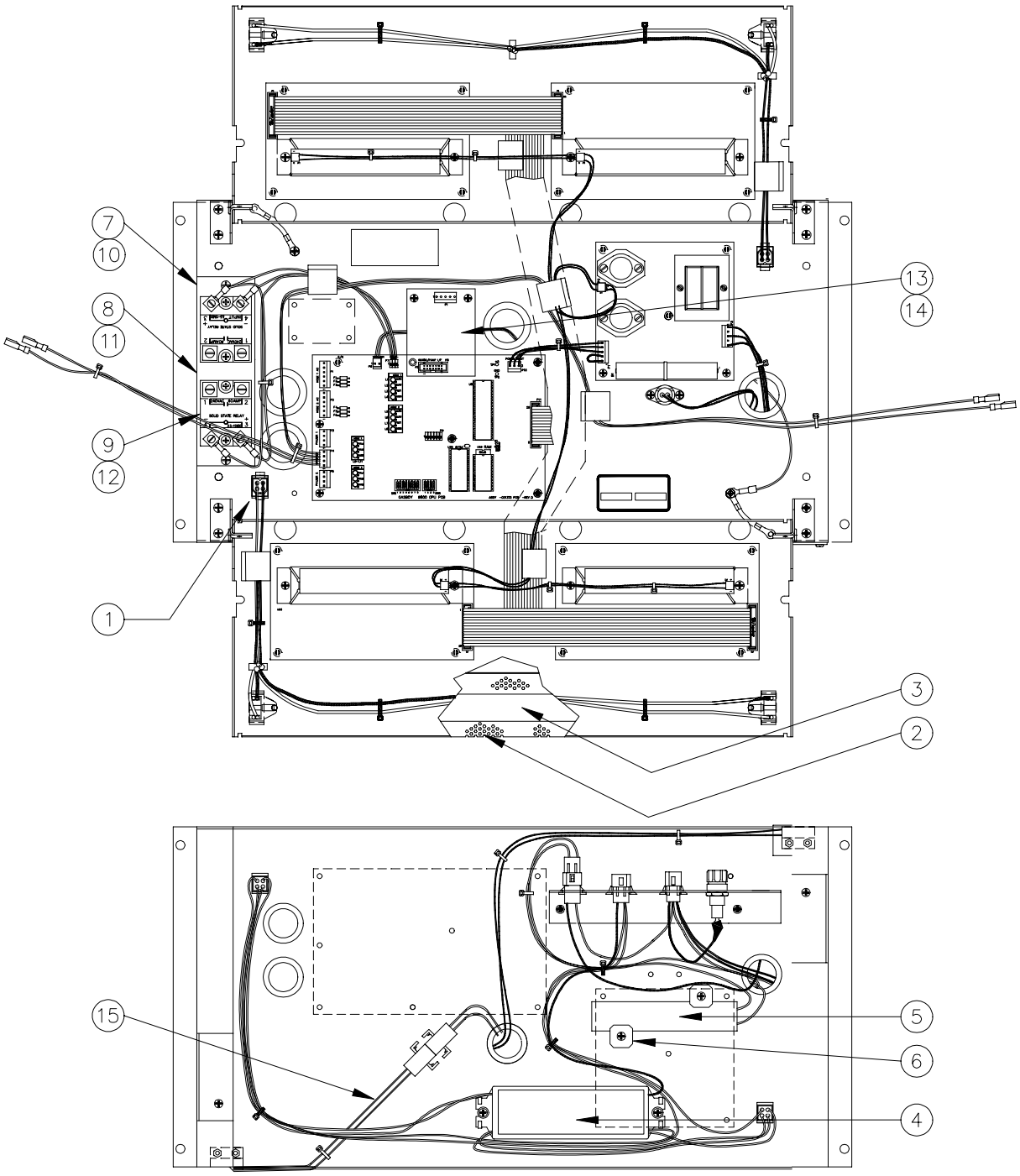

PLATFORM, ELECTRONIC - OPTIONS

Platform Assys. w/Serial Numbers below E04135
C06480 Option Kit, Lights (L) - 120 VAC
C06507 Option Kit, Lights (L) - 240 VAC

1	C06398	Cable Assy., Display Panel Lights
2	C35415	Cover, Display Lamp Screen
3	033412	Lamp, Fluorescent F15T8/CW
4	C06437	Cable Assy., Ballast - 120 VAC
	C06476	Cable Assy., Ballast - 240 VAC

Platform Assys. w/Serial Numbers E04135 & above
C07191 Option Kit, Lights (L) - 120 VAC
C07192 Option Kit, Lights (L) - 240 VAC

1	C07117	Cable Assy., Display Panel Lights
2	C35949	Cover, Display Lamp Screen
3	033412	Lamp, Fluorescent F15T8/CW
4	C06437	Cable Assy., Ballast - 120 VAC
	C06476	Cable Assy., Ballast - 240 VAC

C06481 Option Kit, Heater (H) - 120 VAC
C06506 Option Kit, Heater (H) - 240 VAC

5	C06450	Cable Assy., Heater - 120 VAC
	C06490	Cable Assy., Heater - 240 VAC
6	067165	Washer, Fiber

C06485 Option Kit, Relay - Twin (RT)

7	C06433	Relay Assy., Twin
8	*C34965	Bracket, Pump Relay - Twin
9	*C08746	Relay, Solid State, 40 Amp

C06484 Option Kit, Relay - Single (RS)

10	C06432	Relay Assy., Single
11	*C35417	Bracket, Pump Relay - Single
12	*C08746	Relay, Solid State, 40 Amp

C06482 Option Kit, Pump I/F

13	C06425	PCB Assy., Pump I/F

C07357 Option Kit, Pump I/F (Dual Output) For 9800A Single only.

13	C06746	PCB Assy., Pump I/F, Dual Output

C06483 Option Kit, RS-485

14	C06389	PCB Assy., RS-485

C06818 Option Kit, Rear Totalizer

15	C06819	Cable Assy., Rear Totalizer

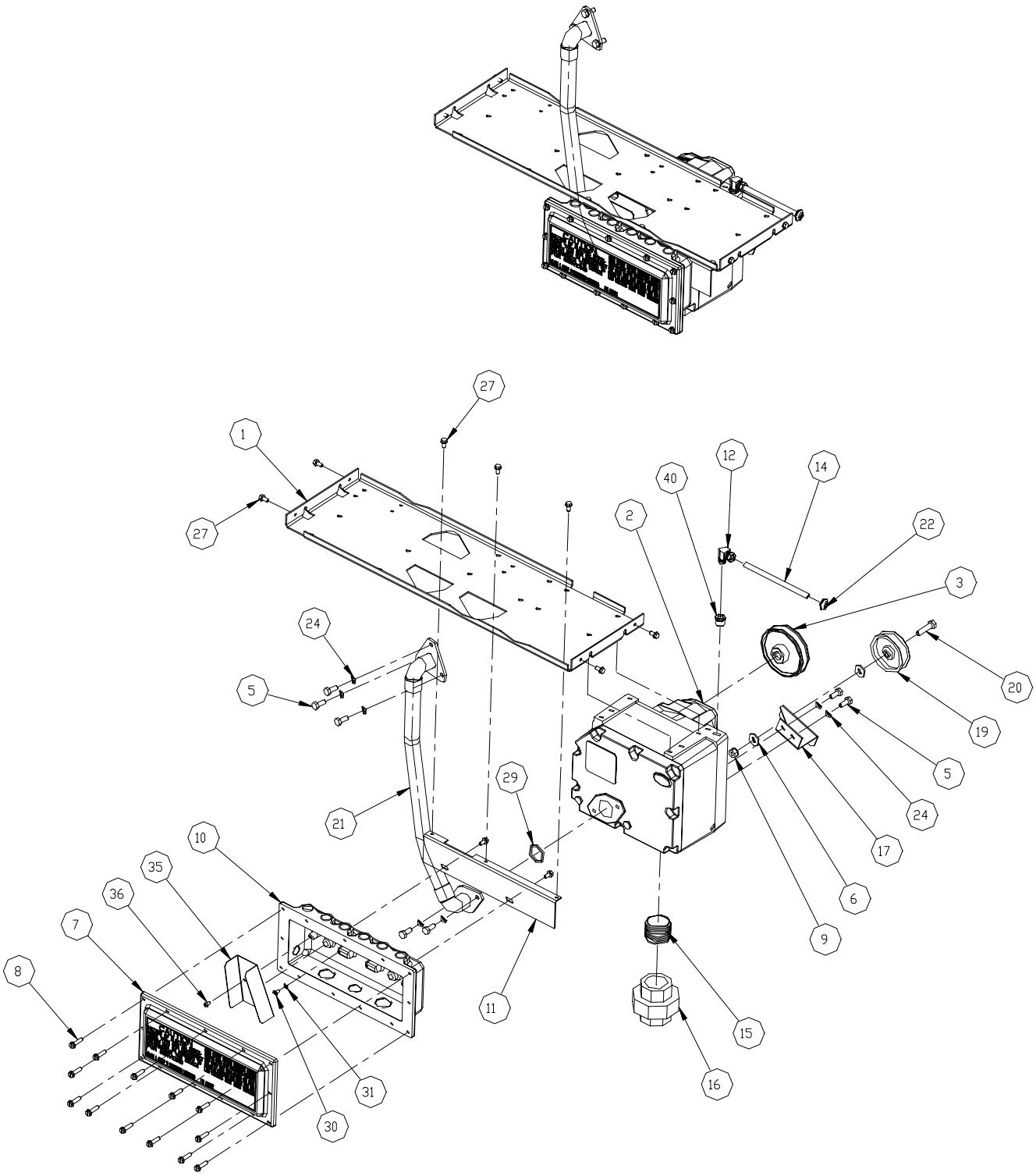
27
1
27
12
14
40
2
22
3
24
20
5
19
5
29
24
21
17
10
35
6
36
9
7
8
11
15
16
31
30

PUMP MODULE, 9800Q

Item	Part No.	Description
1	015165	Platform, Motor and Blackmer Pump
2	049785	Pump, Blackmer
3	047293	Pulley, 5/8" Bore 4"
4	053639	Screw, 8-32 x 5/8 Ph Fl Hd Typ. F
5	052453	Screw, M8 1.25 x 20mm
6	068035	Washer, 3/8
7	003292	Junction Box Cover
8	053918	Screw, 1/4-20 x 1
9	038621	Nut, Hex Kleps
10	005291	Junction Box, 98Q/QX
11	015166	Bracket, Junction box
12	026038	Fitting Assy., El 3/8 Flare x 1/4 NPTM
14	023418	Tube Vent, Blackmer Pump Single
15	038005	Pipe TBE, 1-1/2 x 1-3/4 Close
16	066385	Union, 1-1/2" NPT
17	047307	Bracket, Idler Pulley
19	047009	Pulley, Idler
20	052075	Screw, 3/8-16 x 1-1/2 HHC Pl
21	063607	Tube Assy., Pump/Meter Q
22	058021	Grommet
24	068875	Washer, Lock, Std., Spring 5/16 Pl
27	053919	Screw, 1/4-20 x 1/2 Hex Hd
29	049002	O-Ring, Square Cut, #7-218
30	052976	Screw, 10-32 x 3/8 Bnd Hd Slt Grn
31	067500	Washer, Brass, Cupped
35	015464	Bracket, Separator, JBox
36	053017	Screw, 10-32 x 3/8 Pn Hd Phl
40	017266	Bushing, 3/8 x 1/4

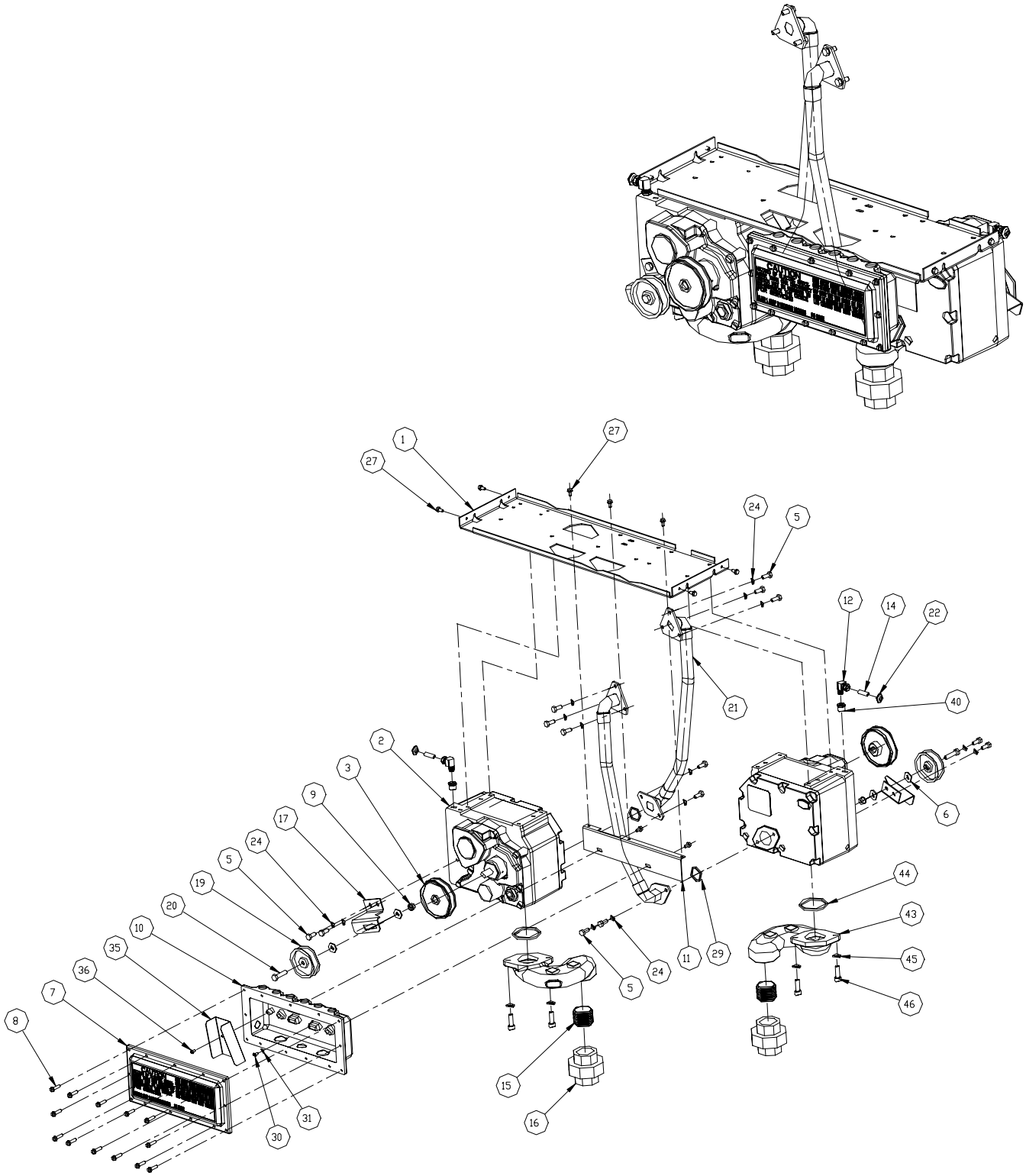
1
27
27
24
5
12
14
22
21
40
2
3
9
17
24
5
19
20
10
35
36
7
8
6
44
43
45
46
11
29
24
5
15
16
30
31

PUMP MODULE, 9800QTW

Item	Part No.	Description
1	015165	Platform, Motor and Blackmer Pump
2	049785	Pump, Blackmer
3	047293	Pulley, 5/8" Bore 4"
5	052453	Screw, M8 1.25 x 20mm
6	068035	Washer, 3/8
7	003292	Junction Box Cover
8	053918	Screw, 1/4-20 x 1
9	038621	Nut, Hex Kleps
10	003291	Junction Box, 98QTW1M/TW2
11	015166	Bracket, Junction box
12	026038	Fitting Assy., El 3/8 Flare x 1/4 NPTM
14	023226	Tube Vent
15	038005	Pipe TBE, 1-1/2 x 1-3/4 Close
16	066385	Union, 1-1/2 #150 Stockham
17	047307	Bracket, Idler Pulley
19	047009	Pulley, Idler
20	052075	Screw, 3/8-16 x 1-1/2 HHC Pl
21	063607	Tube Assy., Pump/Meter Q
22	058021	Grommet
24	068875	Washer, Lock, Std., Spring 5/16 Pl
27	053919	Screw, 1/4-20 x 1/2 Hex Hd
29	049002	O-Ring, Square Cut, #7-218
30	052976	Screw, 10-32 x 3/8 Bnd Hd Slt Grn
31	067500	Washer, Brass, Cupped
35	015464	Bracket, Separator, JBox
36	053017	Screw, 10-32 x 3/8 Pn Hd Phl
40	017266	Bushing, 3/8 x 1/4
43	003578	Casting Offset, Q Pump
44	049185	Ring, Square, 2.42ID
45	068921	Washer, Lock Std Spring, 7/16
46	052456	Screw, M10 x 1.5 x 30mm

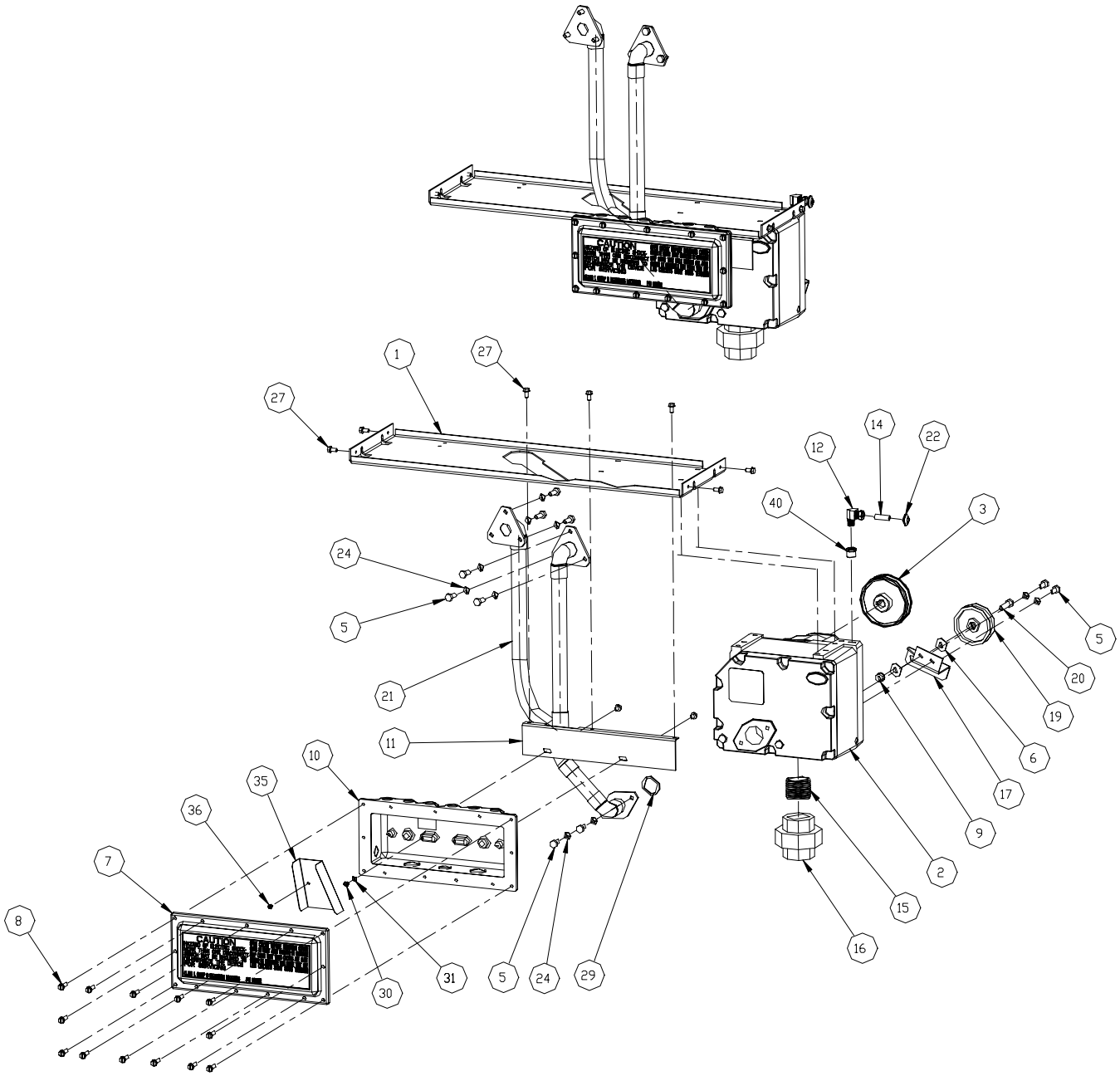
1
27
27
14
22
12
40
3
24
5
5
20
21
19
11
6
10
17
35
36
9
7
2
8
15
16
30
31
5
24
29

PUMP MODULE, 9852QTW1

Item	Part No.	Description
1	015162	Platform, Motor and Blackmer Pump, TW1
2	049785	Pump, Blackmer
3	047293	Pulley, 5/8" Bore 4"
5	052453	Screw, M8 1.25 x 20mm
6	068035	Washer, 3/8
7	003292	Junction Box Cover
8	053918	Screw, 1/4-20 x 1
9	038621	Nut, Hex Kleps
10	004291	Junction Box, 98Q/QXTW1/TW2
11	015166	Bracket, Junction box
12	026038	Fitting Assy., El 3/8 Flare x 1/4 NPTM
14	023226	Tube Vent
15	038005	Pipe TBE, 1-1/2 x 1-3/4 Close
16	066385	Union, 1-1/2 #150 Stockham
17	047307	Bracket, Idler Pulley
19	047009	Pulley, Idler
20	052075	Screw, 3/8-16 x 1-1/2 HHC Pl
21	063609	Tube Assy., Pump/Meter QTW1
22	058021	Grommet
24	068875	Washer, Lock, Std., Spring 5/16 Pl
27	053919	Screw, 1/4-20 x 1/2 Hex Hd
29	049002	O-Ring, Square Cut, #7-218
30	052976	Screw, 10-32 x 3/8 Bnd Hd Slt Grn
31	067500	Washer, Brass, Cupped
35	015464	Bracket, Separator, JBox
36	053017	Screw, 10-32 x 3/8 Pn Hd Phl
40	017266	Bushing, 3/8 x 1/4

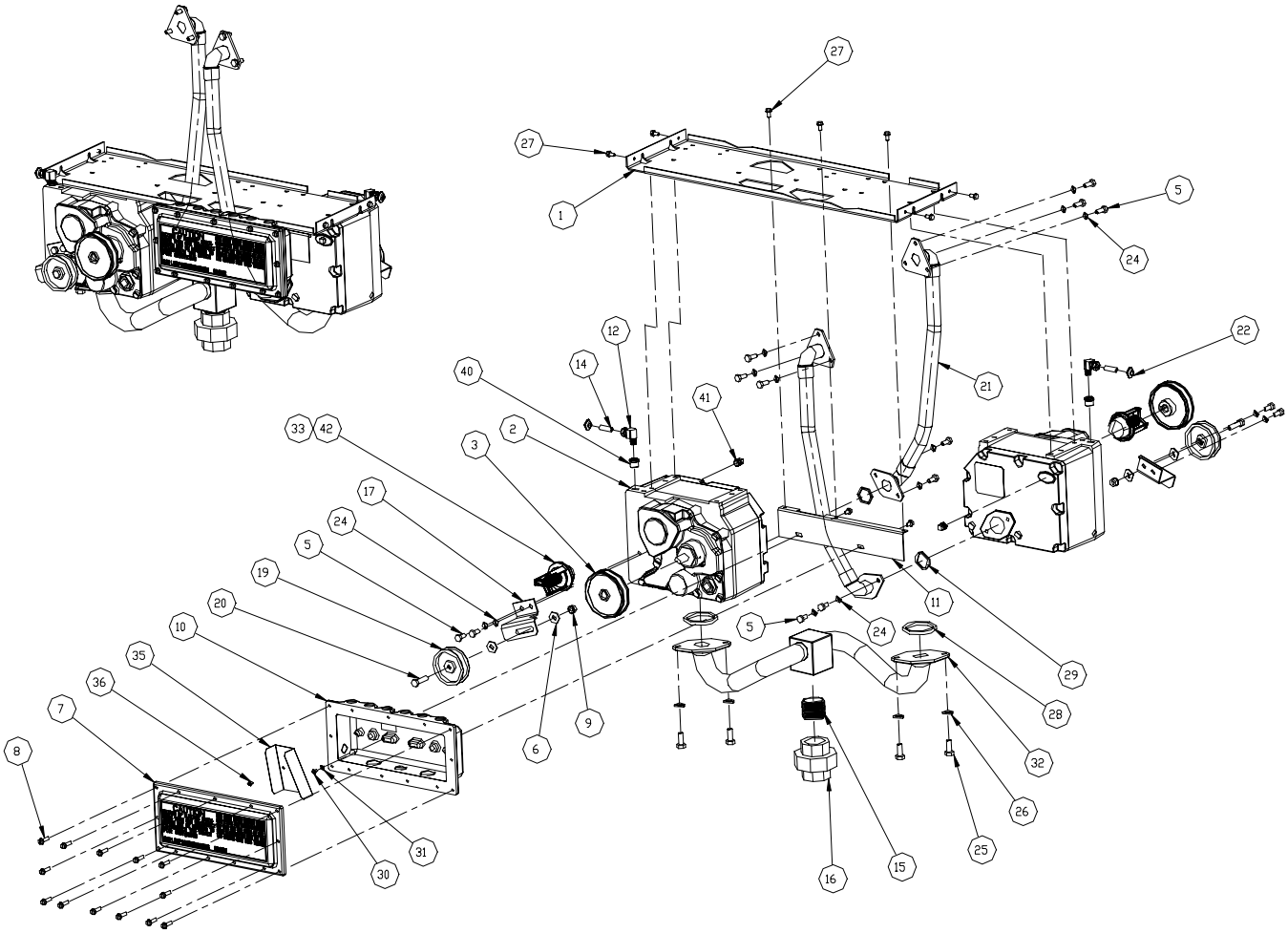
27
27
1
5
24
12
14
40
41
22
21
33
42
2
3
17
24
5
19
20
10
35
36
7
8
11
5
24
29
28
32
26
25
15
16
6
9
31
30

PUMP MODULE, 98QTW1M/9840Q

Item	Part No.	Description
1	015165	Platform, Motor and Blackmer Pump
2	049785	Pump, Blackmer
3	047293	Pulley, 5/8" Bore 4"
4	053639	Screw, 8-32 x 5/8 PH FL HD
5	052453	Screw, M8 1.25 x 20mm
6	068035	Washer, 3/8
7	003292	Junction Box Cover
8	053918	Screw, 1/4-20 x 1
9	038621	Nut, Hex Kleps
10	003291	Junction Box, 91QTW1M/TW2
11	015166	Bracket, Junction box
12	026038	Fitting Assy., El 3/8 Flare x 1/4 NPTM
14	023226	Tube Vent
15	038005	Pipe TBE, 1-1/2 x 1-3/4 Close
	038065	Pipe TBE, 2 x 2 Close, 9140Q
16	066385	Union, 1-1/2 #150 Stockham
	066386	Union, 2 Std Blk 150, 9140Q
17	047307	Bracket, Idler Pulley
19	047009	Pulley, Idler
20	052075	Screw, 3/8-16 x 1-1/2 HHC Pl
22	058021	Grommet
24	068875	Washer, Lock, Std., Spring 5/16 Pl
25	052455	Screw, M10, 1.5 x 25mm
26	068920	Washer, Lock, Std Spring 1/2 Pl
27	053919	Screw, 1/4-20 x 1/2 Hex Hd
28	049185	O-Ring, Square Cut, Blackmer Pump
29	049002	O-Ring, Square Cut, #7-218
30	052976	Screw, 10-32 x 3/8 Bnd Hd Slt Grn
31	067500	Washer, Brass, Cupped
32	063606	Manifold Inlet, 1-1/2 NPT
	063605	Manifold Inlet, 2" NPT, 9140Q
33	063228	Kit, Check Valve
35	015464	Bracket, Separator, JBox
36	053017	Screw, 10-32 x 3/8 Pn Hd Phl
40	017266	Bushing, 3/8 x 1/4
41	047283	Plug Pipe, Square Hd., 1/4
42	057465	Spring Check Valve

PUMPING UNIT BREAKDOWN

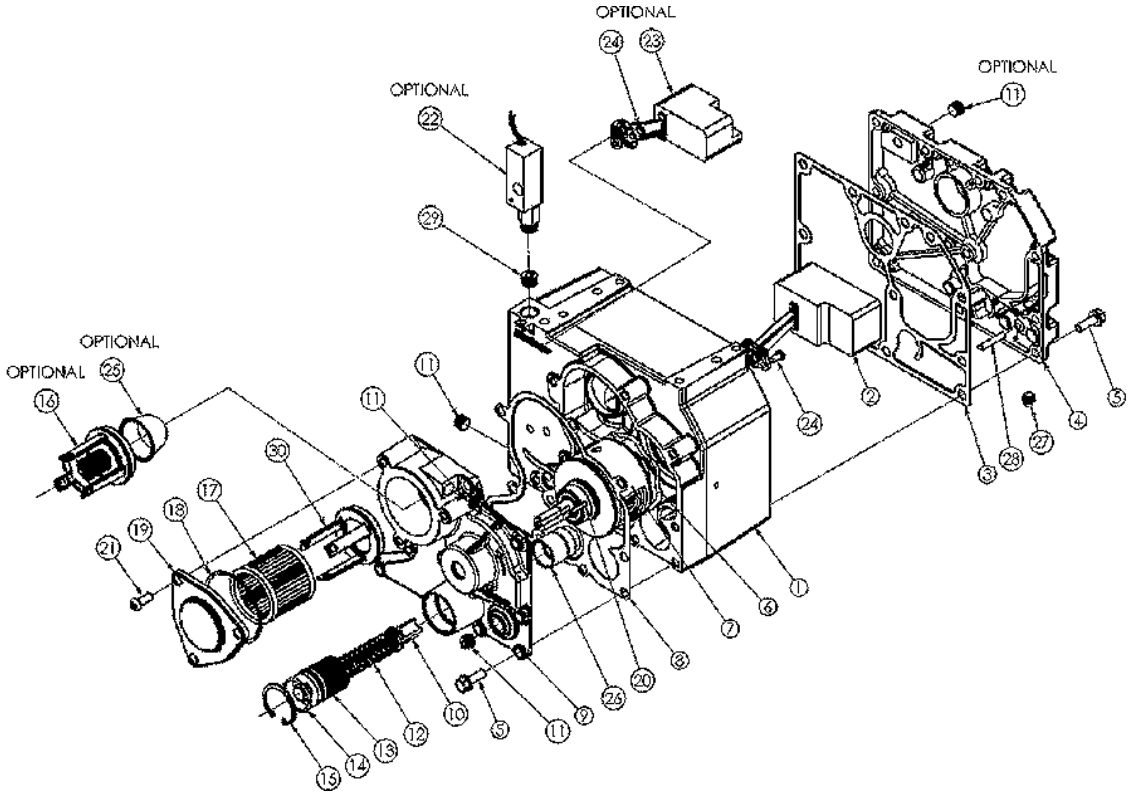

Item	Description	Part Number
1	Casing, Pump	Not available for sale
2	Float Assy., Sump	063202
3	Gasket, Sump	063221
4	Sump Cover Assy.	Not available for sale
5	Screw, Taptite	Not available for sale
6	Wave Spring	Kit - 063230
7	Pump Cartridge	Kit - 063230
8	Gasket, Head	063222
9	Head	Not available for sale
10	Pressure Control Valve (PCV)	Kit - 063229
11	Plug	047304
12	Spring, PCV	Kit - 063229
13	Cover, PCV	Not available for sale
14	O-Ring, PCV Cover	063223
15	Retaining Ring	Kit - 063229
16	Check Valve Assy.	Kit - 063255
17	Strainer	Kit - 063226
18	O-Ring, Strainer Cover	063224
19	Cover, Strainer	Not available for sale
20	Key, Shaft	063225
21	Capscrew	Not available for sale
22	OIML Switch Assy.	Not available for sale
23	Float, Sump Overflow Assy.	Kit - 063231
24	Capscrew	Not available for sale

RESET

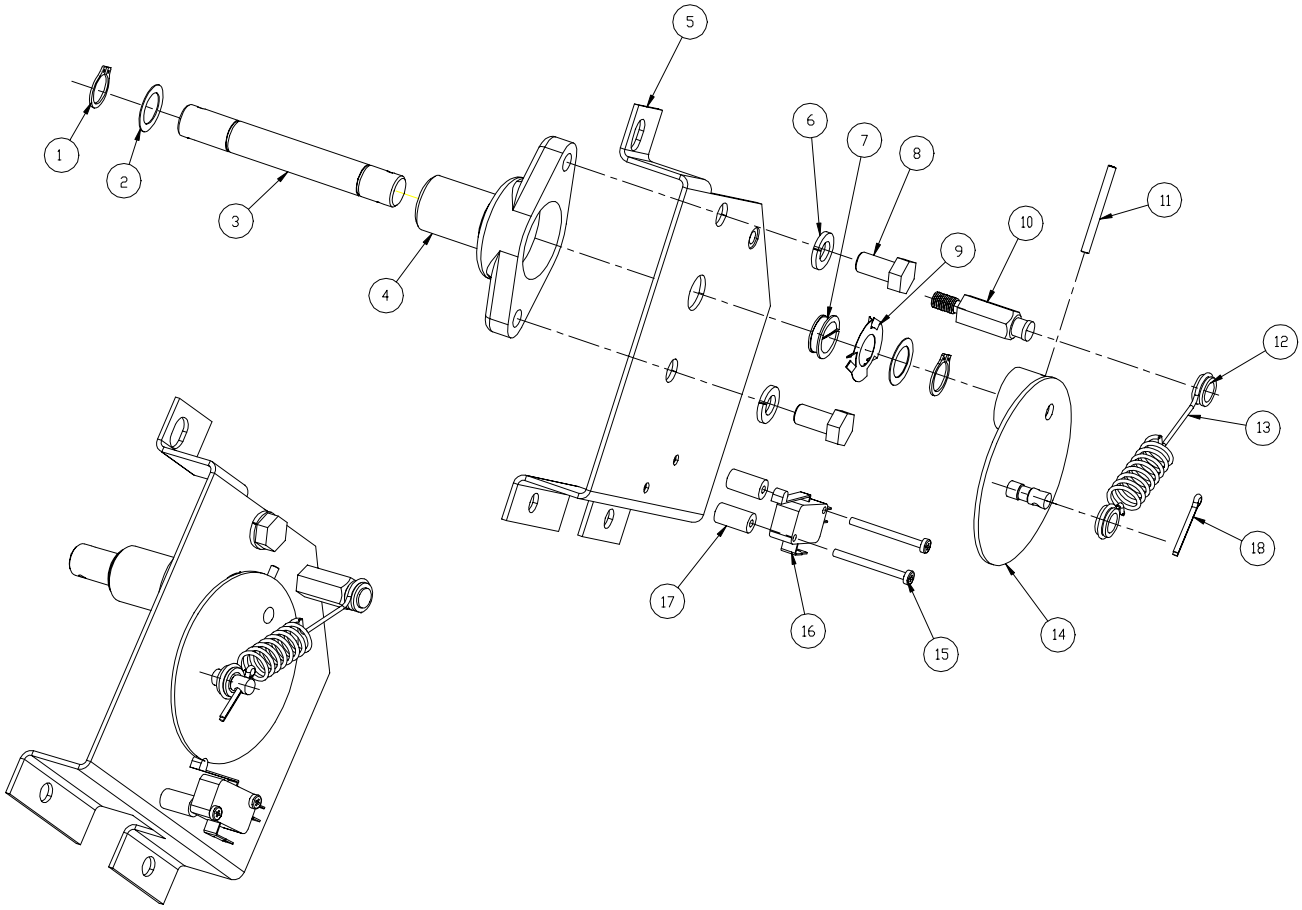

Item	Part No.	Description
1	048612	Retaining Ring, Truarc 5100-50
2	067109	Washer, Brass
3	054447	Shaft, Start, 9800 Series
4	003184	Start Shaft
5	046515	Reset Bracket Assy.
6	068875	Washer, Lock, Std., Spring 5/16 Pl
7	011958	Bearing, Nyliner, 1/2
8	052285	Screw, 5/16-18 x 5/8 HHC
9	068951	Washer, Finger Spring
10	048794	Spring Retainer
11	042657	Pin Roll SZ-125-1.375
12	042912	Pin Collar
13	029363	Spring Handle
14	046054	Start Shaft, Plt
15	C01317	Screw, 4-40 x 1-1/4 Hd Lg Phil
16	C03334	Switch, SPDT, Snap action
17	013190	Spacer
18	K02125	Cotter Pin

TOTALIZER, MECHANICAL

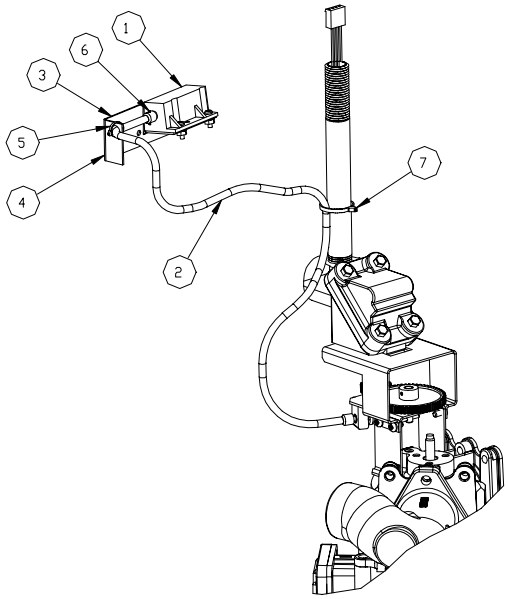

Item	Part No.	Description
1	039824	Totalizer Assy., 9-Digit, Gallon
	039825	Totalizer Assy., 9-Digit, Liter
2	017366	Cable Assy., 9-Digit Totalizer, 9800A
	017365	Cable Assy., 9-Digit Totalizer, 9850AXTW
3	015129	Totalizer Bracket, 9800A
4	069077	Totalizer Window, 9800A
5	0M0042	Tie-wrap, 5/8 Dia Max.
6	043220	Spirol Pin
7	C08126	Tie Wrap