SECTION 5A

Premier "C" UDC Electronics

Page Number

Electrical Component & Power Supply Assembly 5A-2, 5A-3

Options Power Supply Assembly 5A-4, 5A-5

Wide Range Power Supply Assembly 5A-6, 5A-7

Card Cage Assembly ..... 5A-8 — 5A-11

Handles/Pulser Barrier Assembly 5A-12, 5A-13

IS Barrier Assembly 5A-14, 5A-15

Motor Control & Power Supply Assembly 5A-16, 5A-17

DPT Board Assembly
- H300C Series 5A-18, 5A-19
- H400C Series 5A-20, 5A-21

Insight Board Assembly
- H300C Series 5A-22, 5A-23
- H400C Series 5A-24, 5A-25

Router Board Assembly
- H300C Series 5A-26, 5A-27
- H400C Series 5A-28, 5A-29

Cash Acceptor Mounting Assembly 5A-30, 5A-31

ELECTRICAL COMPONENT & POWER SUPPLY ASSEMBLY

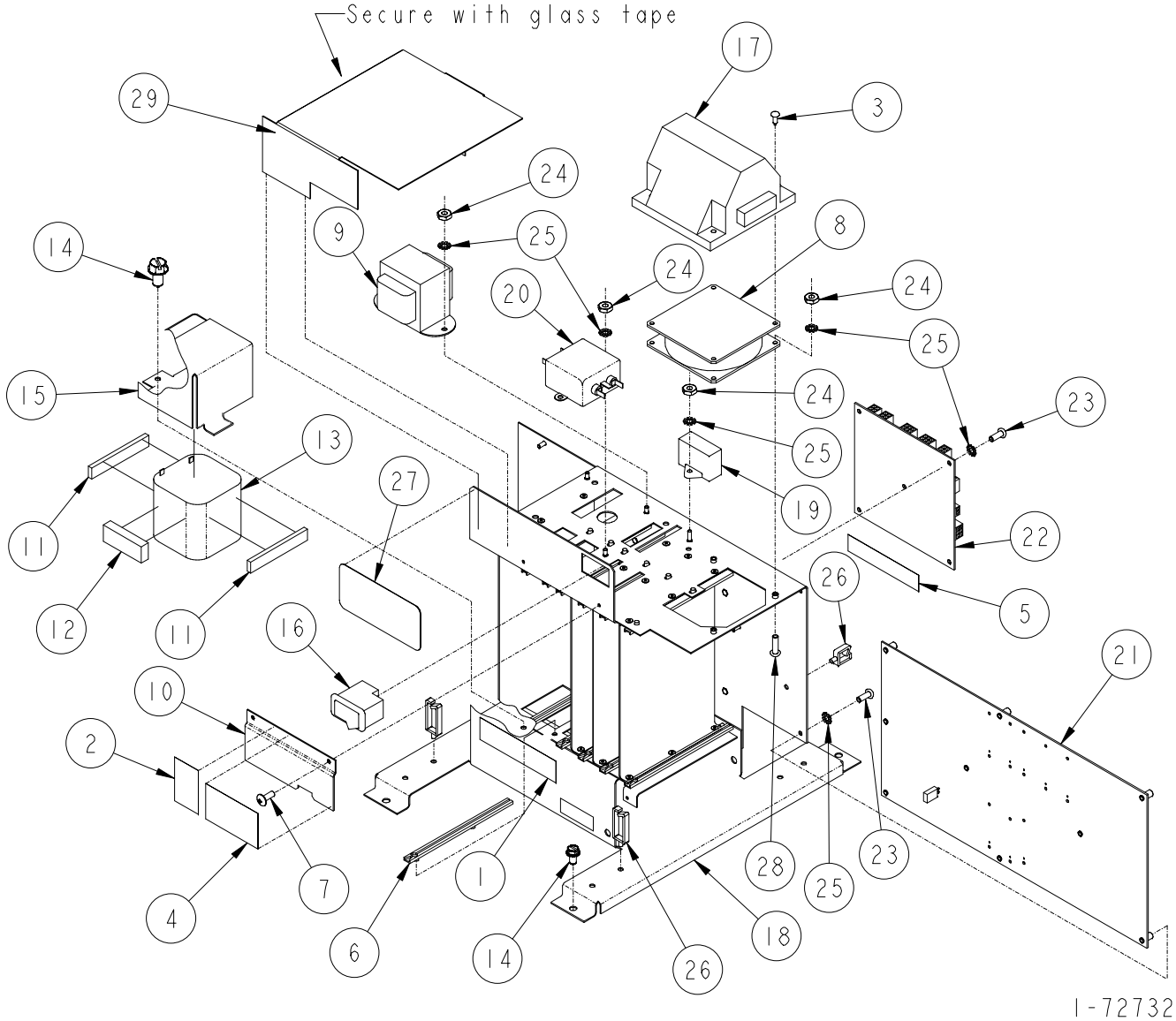

ELECTRICAL COMPONENT & POWER SUPPLY ASSEMBLY

ITEM NO.	PART NO.	DESCRIPTION
1	1-130404	Warning Label
2	1-132756	Label (Test Interface Board)
3	1-132721	Snap Rivet
4	1-226445	Warning Label
5	1-227816	Label (Danger Hi Voltage)
6	2-227818	Card Guide
7	1-230689	#6 x 3/8" Long Phillips Truss Head Self Tapping Screw
8	Fan	
	1-230737	120 Volt
	2-230737	240 Volt
9	231817-1	Transformer Assembly
10	1-231849	Circuit Board Retainer
11	1-231891	Cushion
12	5-227852	Cushion
13	12-315637	Battery Pack
14	69-55392	1/4 x 1/2" Long Hex Washer Head Tapping Screw
15	1-321061	Battery Holder
16	2-319178	AC On/Off Switch
17	Heater	
	1-232135	120 Volt
	3-232135	240 Volt
18	Card Cage & Support Assembly	
	422322-1	Standard
	422322-2	Wide Range Power Supply
19	Surge Protector	
	319473-1	120 Volt
	319473-2	240 Volt
20	319481-1	Filter Assembly
21	420935-1	Mother Board Assembly
22	420955-1	AC Distribution Board Assembly
23	92-50021	#6-32 x 3/8" Long Phillips Round Head Machine Screw
24	03-50211	#6-32 Hex Machine Nut
25	03-50762	#6 Shakeproof Lockwasher
26	1-132718	Cable Retainer
27	1-225424	Caution Label
28	96-50021	#6-32 x 1/2" Long Round Head Machine Screw

1-72732

OPTIONS POWER SUPPLY ASSEMBLY

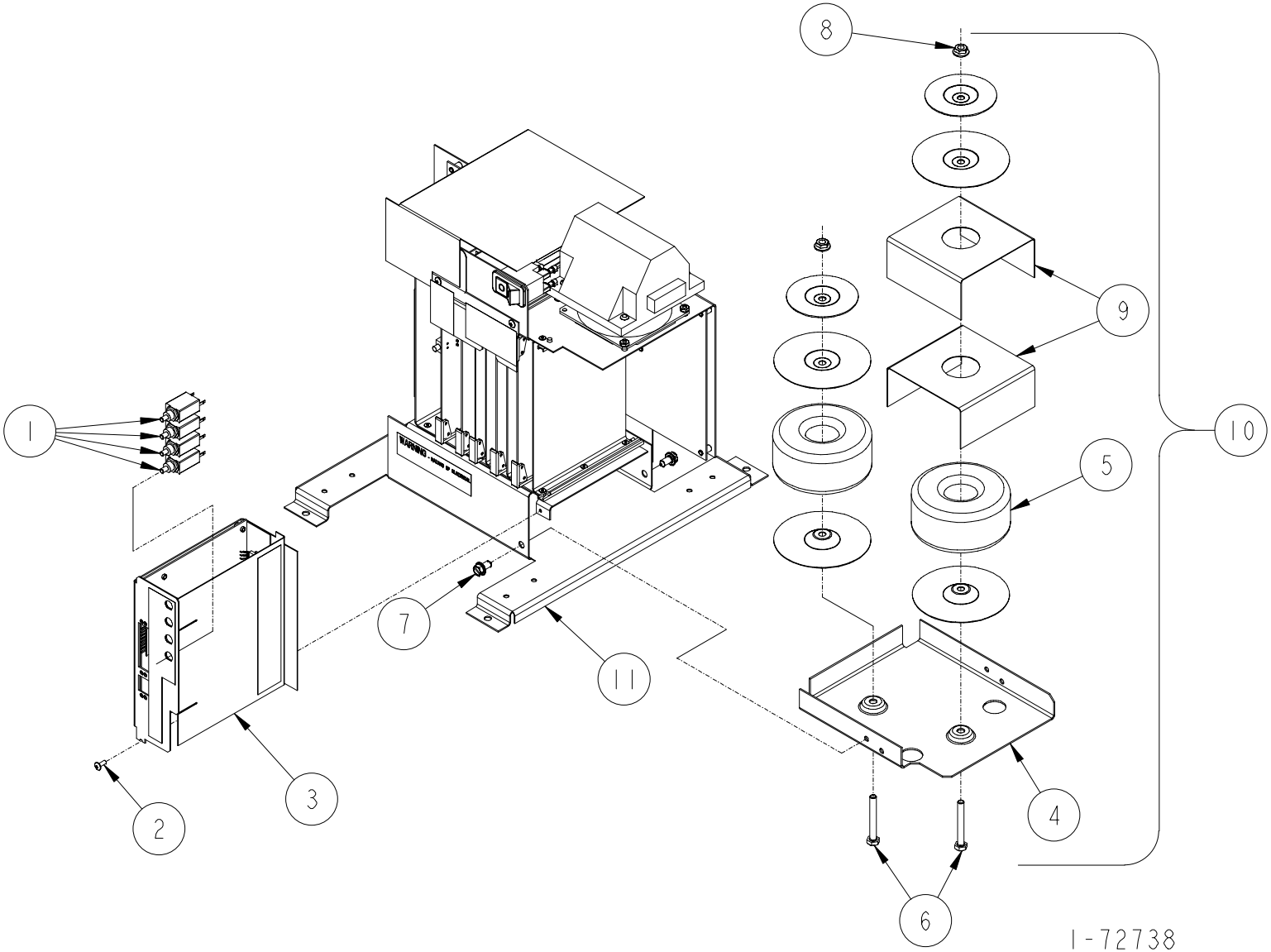

OPTIONS POWER SUPPLY ASSEMBLY

ITEM NO.	PART NO.	DESCRIPTION
1	Circuit Breaker (Dispenser Payment Terminal)	
	6-228135	2 Amp
	9-228135	3 Amp
2	1-230689	#6 x 3/8" Long Phillips Truss Head Self Tapping Screw
3	319407-11	Power Supply Board Assembly (Dispenser Pay Terminal)
4	1-319422	Transformer Bracket
5	319582-1	Transformer Assembly (DPT, Blender)
6	09-50361	1/4-20 x 2" Long Hex Head Cap Screw
7	10-51491	#14 x 1/2" Long P-K Hex Head Self Tapping Screw
8	01-54752	1/4-20 M-F Flange Whiz Lock Nut
9	2-232278	Transformer Shield
10	319407-3	Transformer Assembly (Includes item 3)
11	For parts call out of Electrical Component & Power & Power Supply Assembly see: 72732.	

1-72738

WIDE RANGE POWER SUPPLY ASSEMBLY

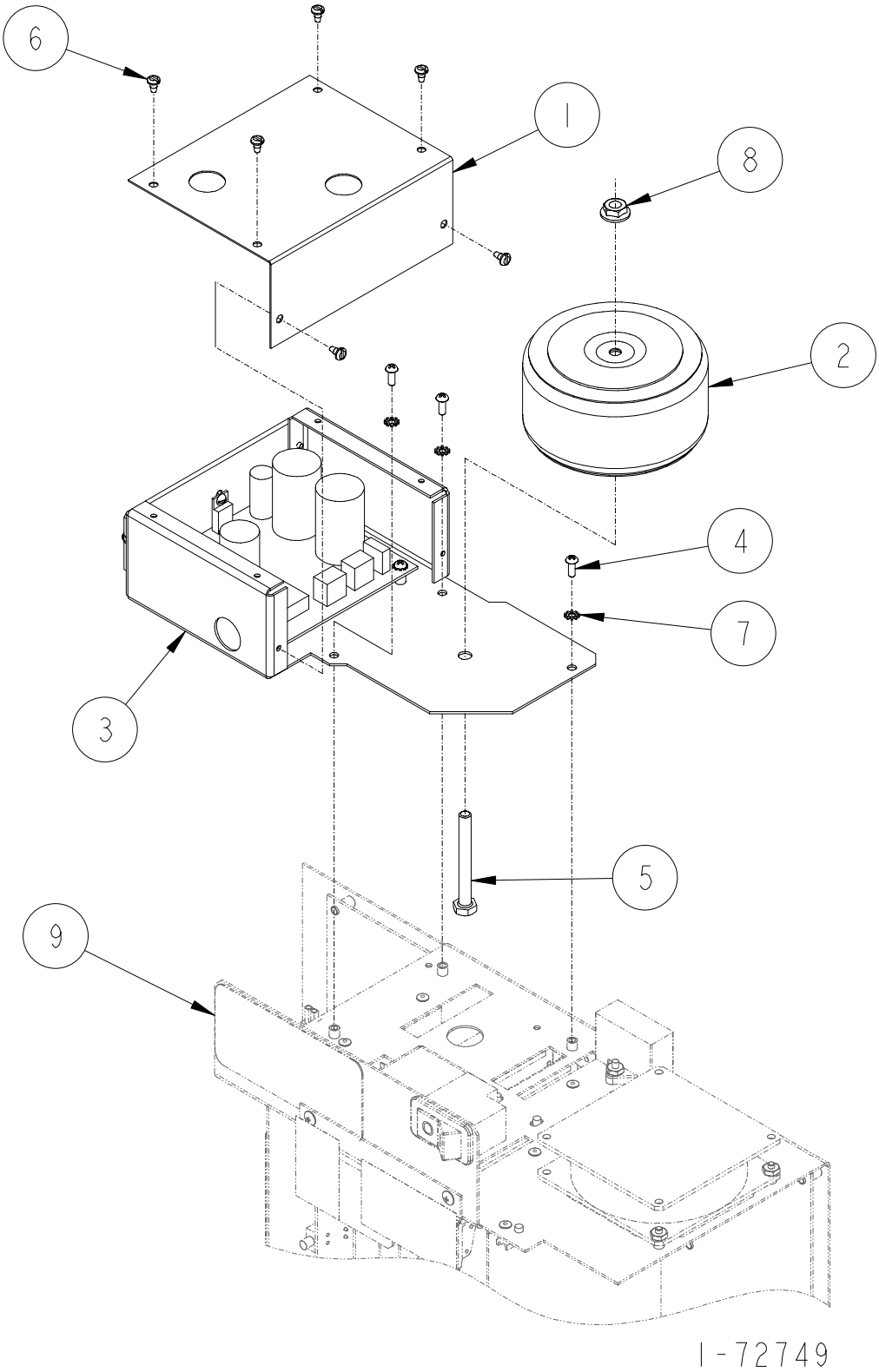

POWER SUPPLY ASSEMBLY (WIDE RANGE)

ITEM NO.	PART NO.	DESCRIPTION
1	1-232747	Insulator Cover
2	319991-2	Transformer Assembly
3	Power Supply Board Assembly	
	421968-1	110 Volt
	421968-4	220 Volt
4	92-50021	#6-32 x 3/8" Long Phillips Round Head Screw
5	10-50361	1/4-20 x 2-1/4" Long Hex Head Cap Screw
6	10-50481	#6-32 x 1/4" Long Pan Head Thread Cutting Screw
7	03-50762	#6 Shakeproof Lockwasher
8	01-54752	1/4-20 M-F Flange Whiz Lock Nut
9	For parts call out of Electrical Component & Power Supply Assembly see 72732.	

For complete Wide Range Power Supply order:

232804-1	120 Volt
232804-2	240 Volt

Reference for Tokheim internal use only:

422323	Card Cage Assembly

1-72749

5
A

CARD CAGE ASSEMBLY

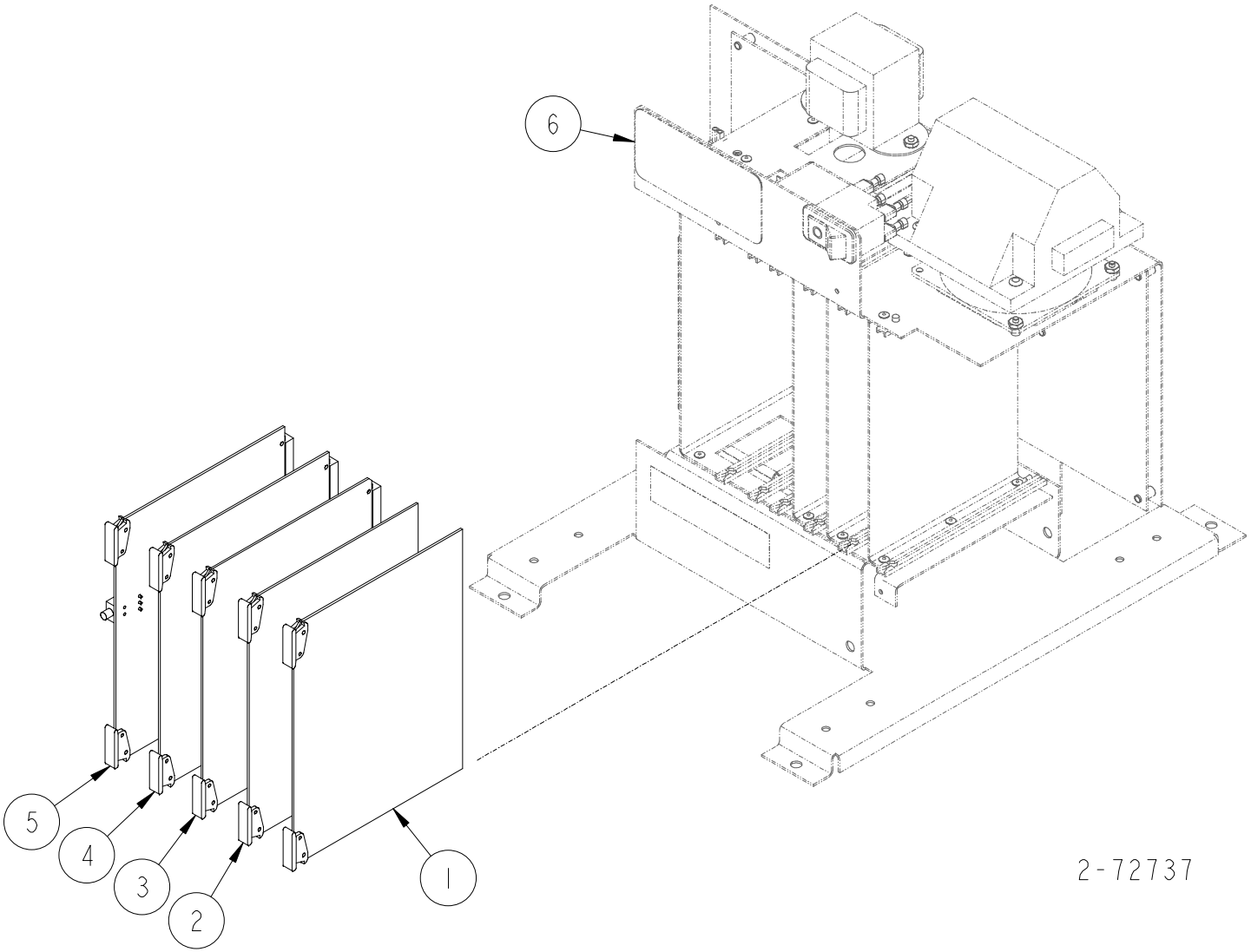

CARD CAGE ASSEMBLY

ITEM NO.	PART NO.	DESCRIPTION
Model: H311C, H312C, H322C & H324C		
1	421084-1	Relay Board Assembly
3	Multiplex Board Assembly	
	421420-1	MaxVac
	421420-4	Without MaxVac
4	421124-6	Expanded Computer Board Assembly (Order EPROM Separately)
	742-314950	EPROM (Domestic)
	743-314950	EPROM (International)
5	Interface Board Assembly	
	421087-1	120 Volt
	421087-2	220 Volt
6	For parts call out of Electrical Component & Power Supply Assembly see 72732	
Model: H311C-RHVM & H322C-RHVMS		
1	421084-5	Relay Board Assembly
3	Multiplex Board Assembly	
	421420-1	MaxVac
	421420-4	Without MaxVac
4	421124-6	Expanded Computer Board Assembly (Order EPROM Separately)
	742-314950	EPROM (Domestic)
	743-314950	EPROM (International)
5	Interface Board Assembly	
	421087-1	120 Volt
	421087-2	220 Volt
6	For parts call out of Electrical Component & Power Supply Assembly see 72732	
Model: H322C-RHVMM		
1	421084-5	Relay Board Assembly
2	421084-1	Relay Board Assembly
3	Multiplex Board Assembly	
	421420-1	MaxVac
	421420-4	Without MaxVac
4	421124-6	Expanded Computer Board Assembly (Order EPROM Separately)
	742-314950	EPROM (Domestic)
	743-314950	EPROM (International)
5	Interface Board Assembly	
	421087-1	120 Volt
	421087-2	220 Volt
6	For parts call out of Electrical Component & Power Supply Assembly see 72732	
Model: H312C-RHVMM & H324C-RHVMS		
1	421084-5	Relay Board Assembly
2	421084-5	Relay Board Assembly
3	Multiplex Board Assembly	
	421420-1	MaxVac
	421420-4	Without MaxVac

CARD CAGE ASSEMBLY
CONTINUED

ITEM NO.	PART NO.	DESCRIPTION
		Model: H312C-RHVMM & H324C-RHVMS (Continued)
4	421124-6	Expanded Computer Board Assembly (Order EPROM Separately)
	742-314950	EPROM (Domestic)
	743-314950	EPROM (International)
5	Interface Board Assembly	
	421087-1	120 Volt
	421087-2	220 Volt
6	For parts call out of Electrical Component & Power Supply Assembly see 72732	
		Model: H311C-B3/5, H322C-B3/5, H411C-B3/5, H413C-EB, H422C-B3/5 & H426C-EB
1	421084-2	Relay Board Assembly
2	421284-1	Valve Interface Board Assembly
3	Blender Control Board Assembly	
	421186-4	Without MaxVac
	421574-5	MaxVac
4	421124-6	Expanded Computer Board Assembly (Order EPROM Separately)
	742-314950	EPROM (Domestic)
	743-314950	EPROM (International)
5	Interface Board Assembly	
	421087-1	120 Volt
	421087-2	240 Volt

ITEM NO.	PART NO.	DESCRIPTION
		Model: H311C-B3/5, H322C-B3/5, H411C-B3/5, H413C-EB, H422C-B3/5 & H426C-EB (Continued)
6	For parts call out of Electrical Component & Power Supply Assembly see 72732	
		Model: H411C, H413C, H422C & H426C
1	421084-1	Relay Board Assembly
2	421084-3	Relay Board Assembly
3	Multiplex Board Assembly	
	421420-1	MaxVac
	421420-4	Without MaxVac
4	421124-6	Expanded Computer Board Assembly (Order EPROM Separately)
	742-314950	EPROM (Domestic)
	743-314950	EPROM (International)
5	Interface Board Assembly	
	421087-1	120 Volt
	421087-2	240 Volt
6	For parts call out of Electrical Component & Power Supply Assembly see 72732	

CARD CAGE ASSEMBLY
CONTINUED

Model: H414C & H428C

ITEM NO.	PART NO.	DESCRIPTION
1	421084-1	Relay Board Assembly
2	421084-1	Relay Board Assembly
3	Multiplex Board Assembly	
	421420-1	MaxVac
	421420-4	Without MaxVac
4	421124-6	Expanded Computer Board Assembly (Order EPROM Separately)
	742-314950	EPROM (Domestic)
	743-314950	EPROM (International)
5	Interface Board Assembly	
	421087-1	120 Volt
	421087-2	240 Volt
6	For parts call out of Electrical Component & Power Supply Assembly see 72732	

Model: H412C-B3/4, H414C-EB, H424C-B3/4 & H428C-EB

ITEM NO.	PART NO.	DESCRIPTION
1	421084-2	Relay Board Assembly
2	421084-3	Relay Board Assembly
3	Blender Control Board Assembly	
	421186-4	Without MaxVac
	421574-5	MaxVac
4	421124-6	Expanded Computer Board Assembly (Order EPROM Separately)
	742-314950	EPROM (Domestic)
	743-314950	EPROM (International)
5	Interface Board Assembly	
	421087-1	120 Volt
	421087-2	240 Volt
6	For parts call out of Electrical Component & Power Supply Assembly see 72732	

2-72737

HANDLES/PULSER BARRIER ASSEMBLY

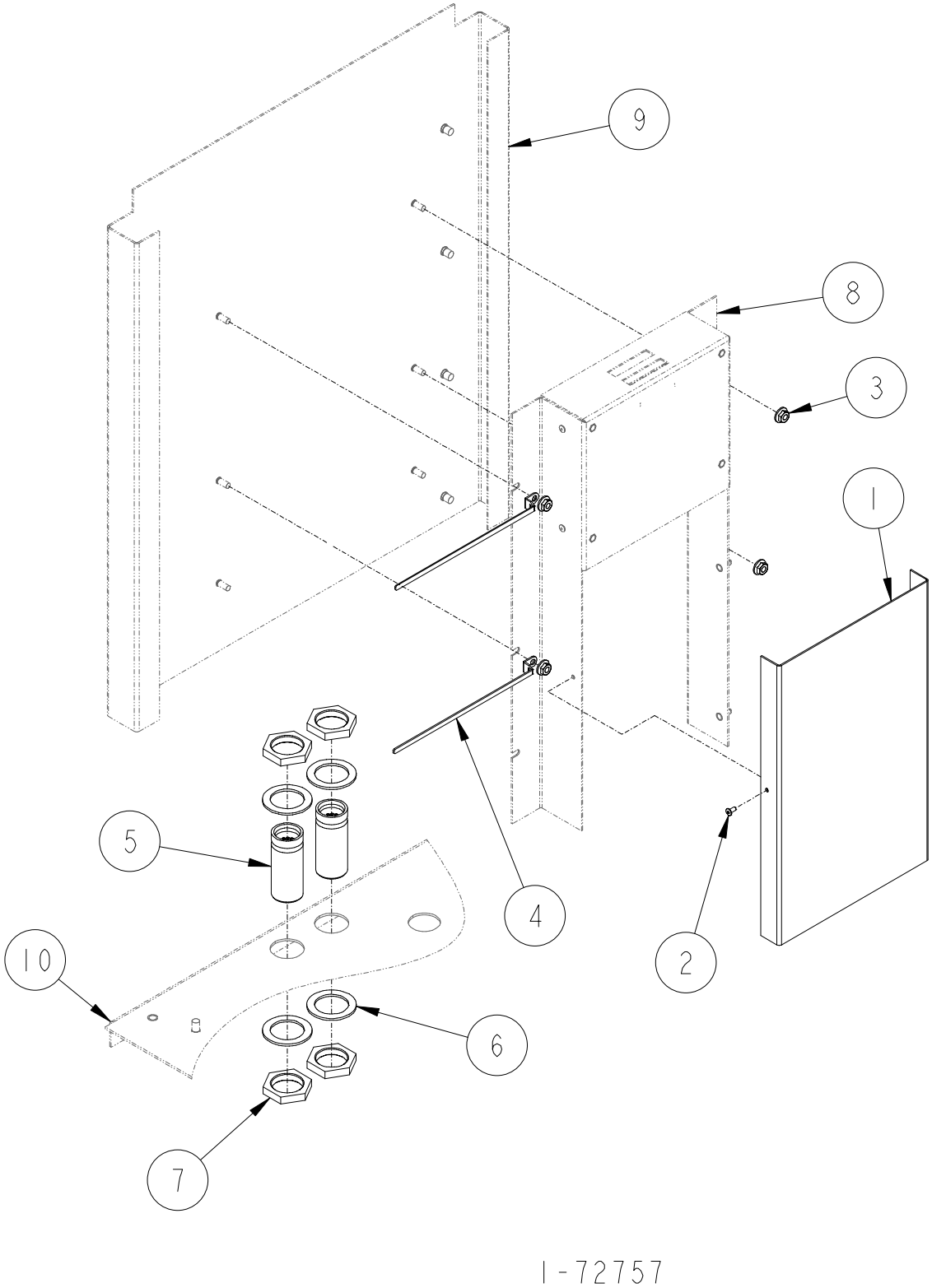

HANDLES/PULSER BARRIER ASSEMBLY

ITEM NO.	PART NO.	DESCRIPTION
1	1-321156	Installation Cover
2	2-232748	Pop Rivet
3	03-54752	#10-24 M-F Flange Whiz Lock Nut
4	4-228918	Cable Clamp
5	Handles/Pulser Harness Assembly	
	422758-1	H411C, H413C, H422C, H422C-B3/4, H424C-B3/4, H426C, H426C-EB (Side "A")
	422758-2	H422C, H422C-B3/4, H424C-B3/4, H426C, H426C-EB (Side "B")
	422758-3	H424C, H428C, H428C-EB (Product 1 & 2)
	422758-4	H424C, H428C, H428C-EB (Product 3 & 4)
	422758-5	H311C, H312C, H322C, H322C-B3/5, H324C
6	1-132777	Conduit Washer
7	1-132791	Hexagon Locknut
8	For parts call out of IS Barrier Assembly see 72788.	
9	For parts call out of Chassis Assembly see:	
	72779	H300C Series
	72724	H400C Series
10	For parts call out of Head Assembly see:	
	72768	H300C Series
	72758	H400C Series
	Reference for Tokheim internal use only:	
	321096	Head Assembly (H300C Series)
	321084	Head Assembly (H400C Series)
	321204	Chassis Assembly (H300C Series)
	321153	Chassis Assembly (H400C Series)
	321217	Final Assembly (H400C Series)
	321218	Final Assembly (H300C Series)

1-72757

5
A

I.S. BARRIER ASSEMBLY

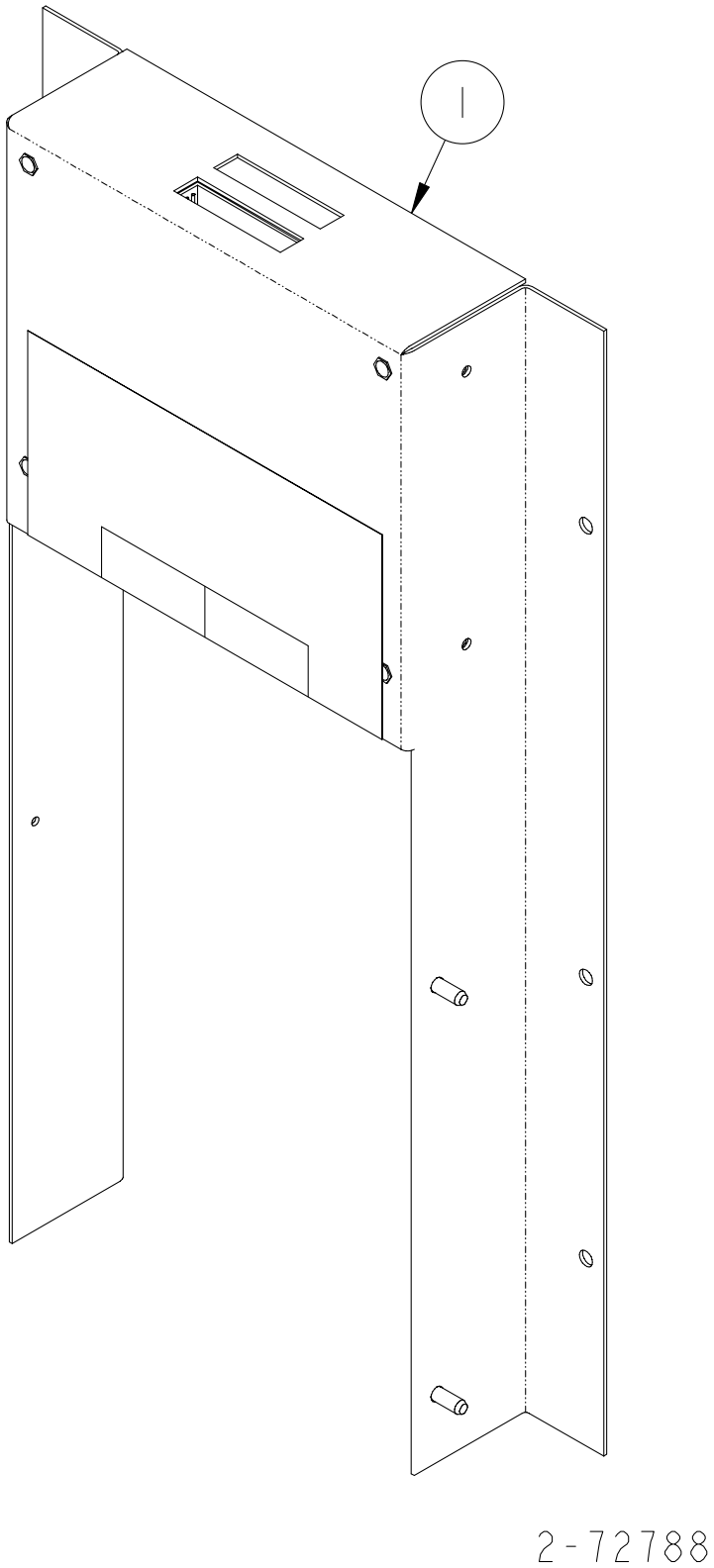

I.S. BARRIER ASSEMBLY

ITEM NO.	PART NO.	DESCRIPTION
1	Handle/Pulser Barrier Assembly	
	321139-4	4 Nozzles (H322C, H322C-B3/5, H324C)
	321139-5	6 Nozzles (H422C, H422C-B3/5, H424C-B3/4, H426C, H426C-EB)
	321139-6	8 Nozzles (H424C, H428C, H428C)
	321139-10	4 Nozzles (Canada)(H322C, H322C-B3/5, H324C)
	321139-12	8 Nozzles (Canada)(H424C, H428C, H428C)
	321139-14	H300C-HV Series
	321139-19	H300C-HV Series (Canada)

2-72788

MOTOR CONTROL & POWER SUPPLY ASSEMBLY

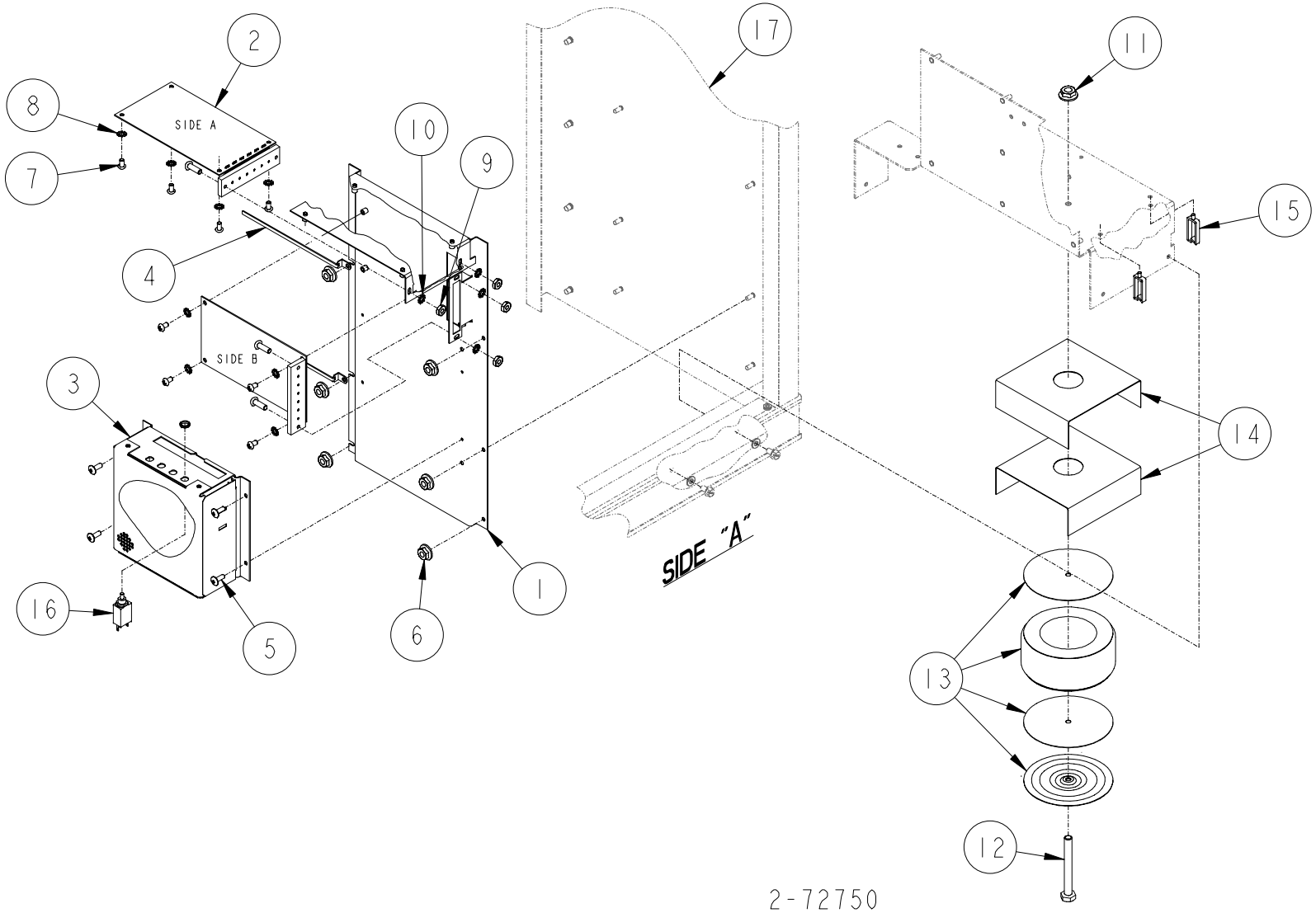

MOTOR CONTROL & POWER SUPPLY ASSEMBLY

ITEM NO.	PART NO.	DESCRIPTION
1	321069-1	MaxVac Mounting Bracket Assembly
2	421449-1	Mini Motor Control Board Assembly
3	Power Supply Assembly	
	319683-3	120 Volt
	319683-4	240 Volt
4	4-228918	Cable Clamp
5	2-230689	#6 x 3/8" Long Phillips Head Self Tapping Screw
6	03-54752	#10-24 M-F Flange Whiz Lock Nut
7	88-50021	#6-32 x 1/4" Long Phillips Round Head Machine Screw
8	03-50762	#6 Shakeproof Lockwasher
9	03-50211	#6-32 Hex Machine Nut
10	96-50021	#6-32 x 1/2" Long Phillips Round Head Machine Screw
11	01-54752	1/4-20 M-F Flange Whiz Lock Nut
12	10-50361	1/4-20 x 2-1/4" Long Hex Head Cap Screw
13	318942-2	Transformer Assembly
14	1-232278	Transformer Shield
15	1-132718	Cable Retainer
16	Circuit Breaker	
	6-228135	2 Amp
	9-228135	3 Amp
17	For parts call out of Head Assembly see:	
	72768	H300C Series
	72758	H400C Series
	Reference for Tokheim internal use only:	
	319500	Circuit Breaker Harness Assembly
	321096	H300C Series Head Assembly
	321084	H400C Series Head Assembly

2-72750

H300C SERIES DPT BOARD ASSEMBLY

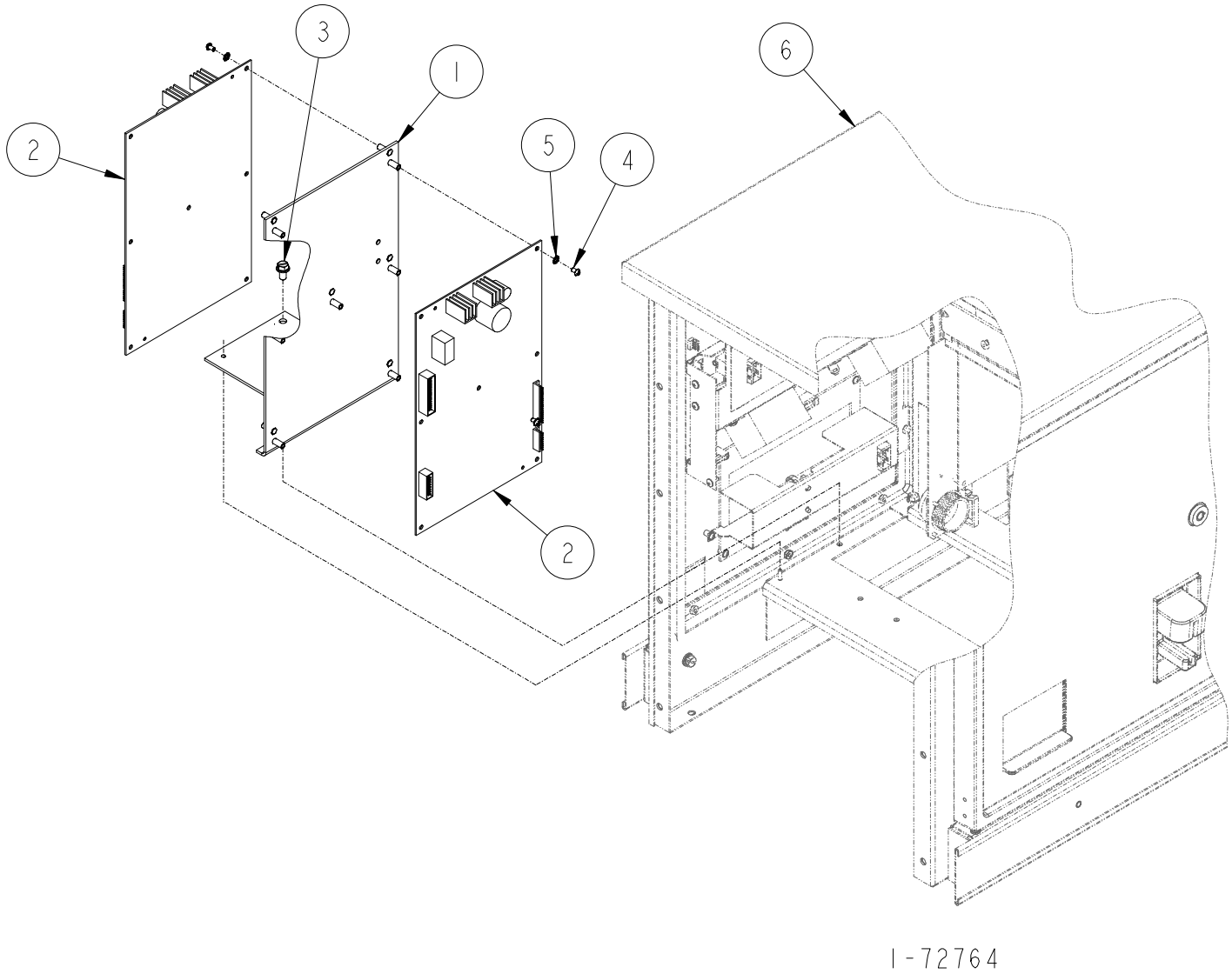

H300C SERIES DPT BOARD ASSEMBLY

ITEM NO.	PART NO.	DESCRIPTION
1	422766-1	DPT Bracket Assembly
2	Board Assembly	
	420929-11	DPT (works with receipt cutters will cut paper)
	420929-13	TDS (will cut paper)
	420929-14	DPT (Hebrew)
	421844-1	Debit
3	69-55392	#14 x 1/2" Long Hex Washer Head Tapping Screw
4	88-50021	#6-32 x 1/4" Long Phillips Round Head Machine Screw
5	03-50762	#6 Shakeproof Lockwasher
6	For parts call out of Head Assembly see: 72768	
	Reference for Tokheim internal use only:	
	321096	Head Assembly

1-72764

H400C SERIES DPT BOARD ASSEMBLY

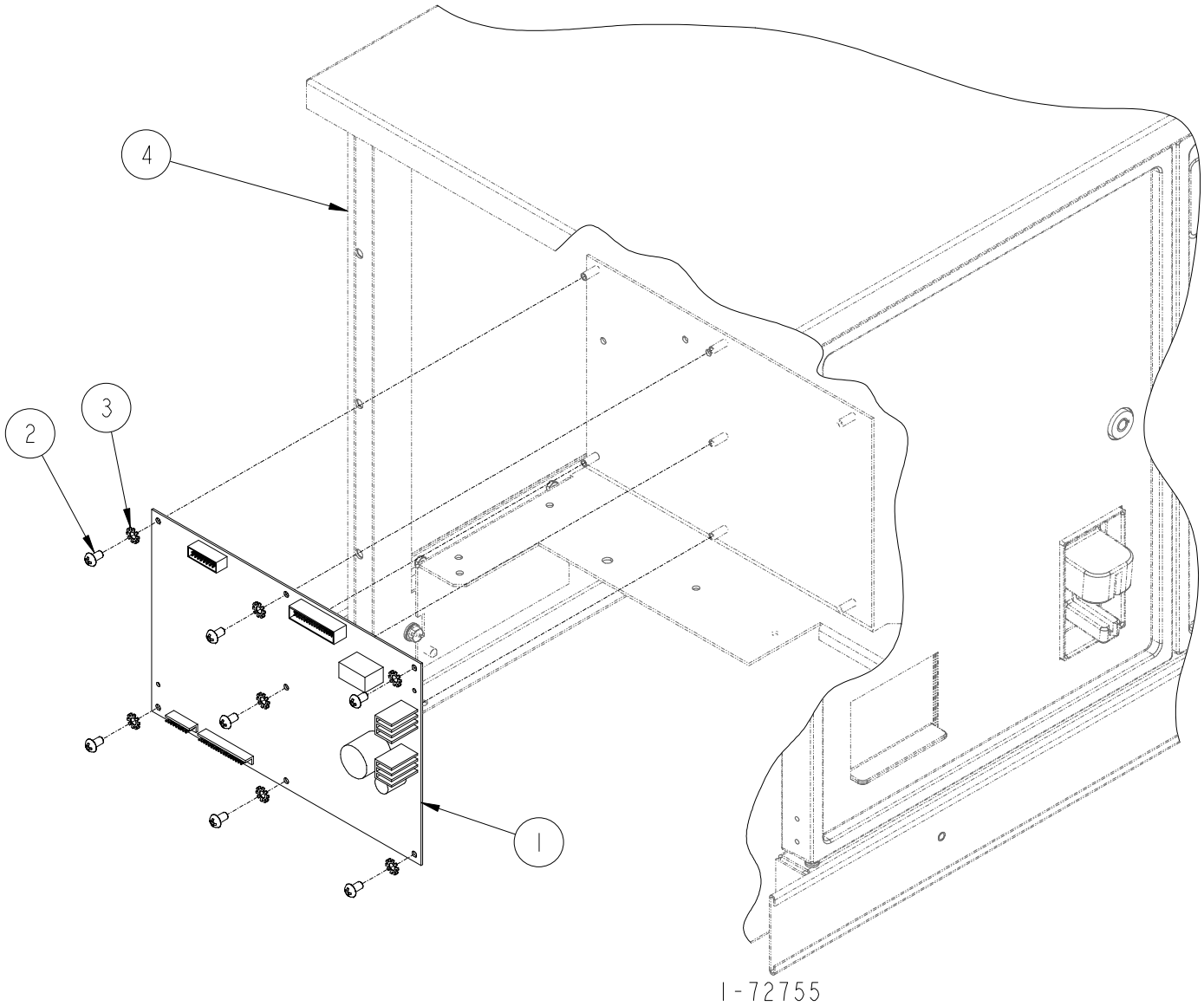

H400C SERIES DPT BOARD ASSEMBLY

ITEM NO.	PART NO.	DESCRIPTION
1	Board Assembly	
	420929-11	DPT (works with receipt cutters will cut paper)
	420929-13	TDS INSIGHT (will cut paper)
	420929-14	DPT (Hebrew)
	421844-1	Debit
2	88-50021	#6-32 x 1/4" Long Phillips Round Head Machine Screw
3	03-50762	#6 Shakeproof Lockwasher
4	For parts call out of Head Assembly see: 72758	
	Reference for Tokheim internal use only:	
	321084	Head Assembly

1-72755

H300C SERIES INSIGHT BOARD ASSEMBLY

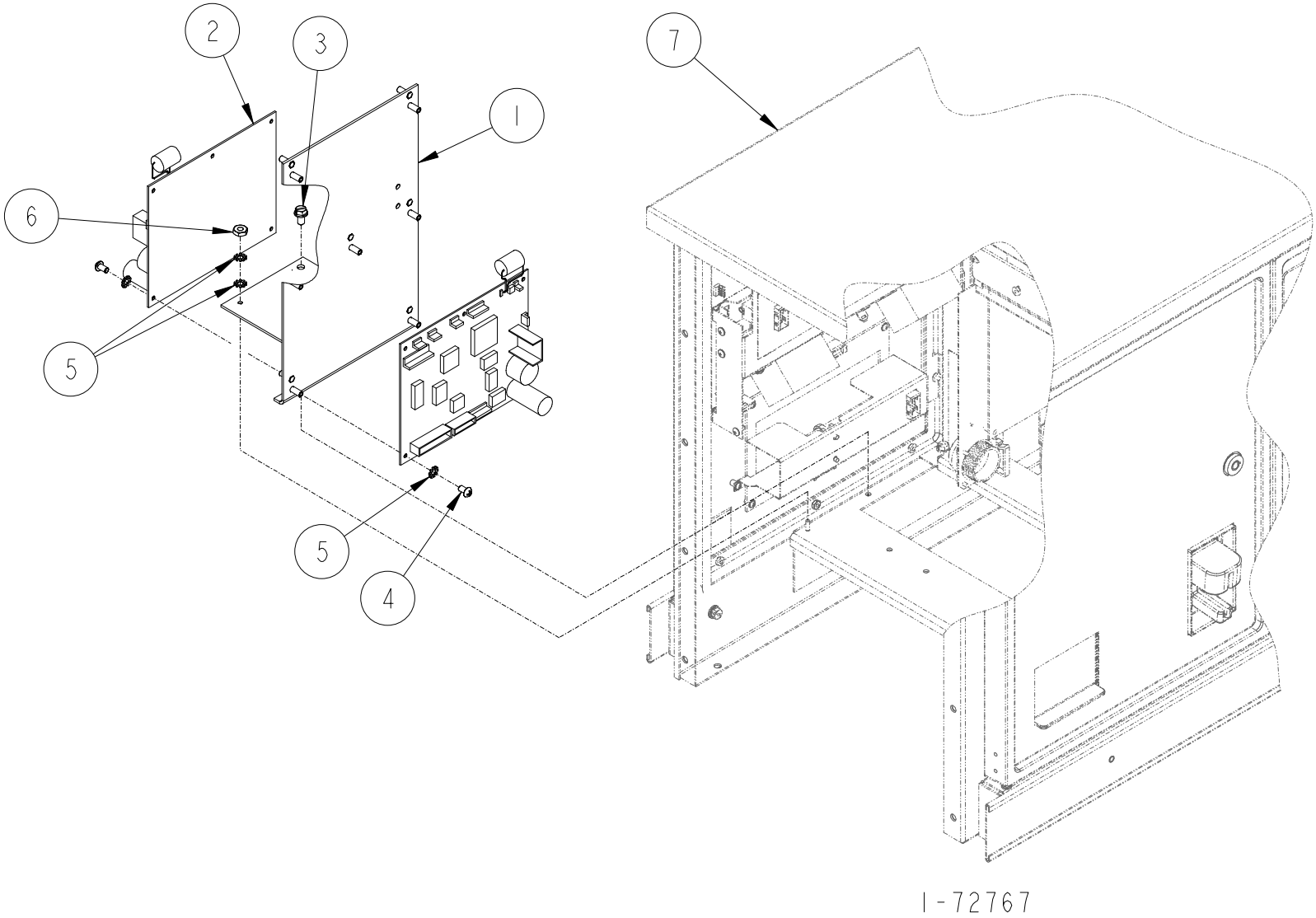

H300C SERIES INSIGHT BOARD ASSEMBLY

ITEM NO.	PART NO.	DESCRIPTION
1	422766-1	DPT Bracket Assembly
2	Board Assembly	
	1-422335	Graphic DPT
	2-422335	InSight (Injected)
3	69-55392	#14 x 1/2" Long Hex Washer Head Tapping Screw
4	88-50021	#6-32 x 1/4" Long Phillips Round Head Machine Screw
5	03-50762	#6 Shakeproof Lockwasher
6	03-50211	#6-32 Hex Machine Nut
5	For parts call out of Head Assembly see: 72768	
	Reference for Tokheim internal use only:	
	321096	Head Assembly

1-72767

H400C SERIES INSIGHT BOARD ASSEMBLY

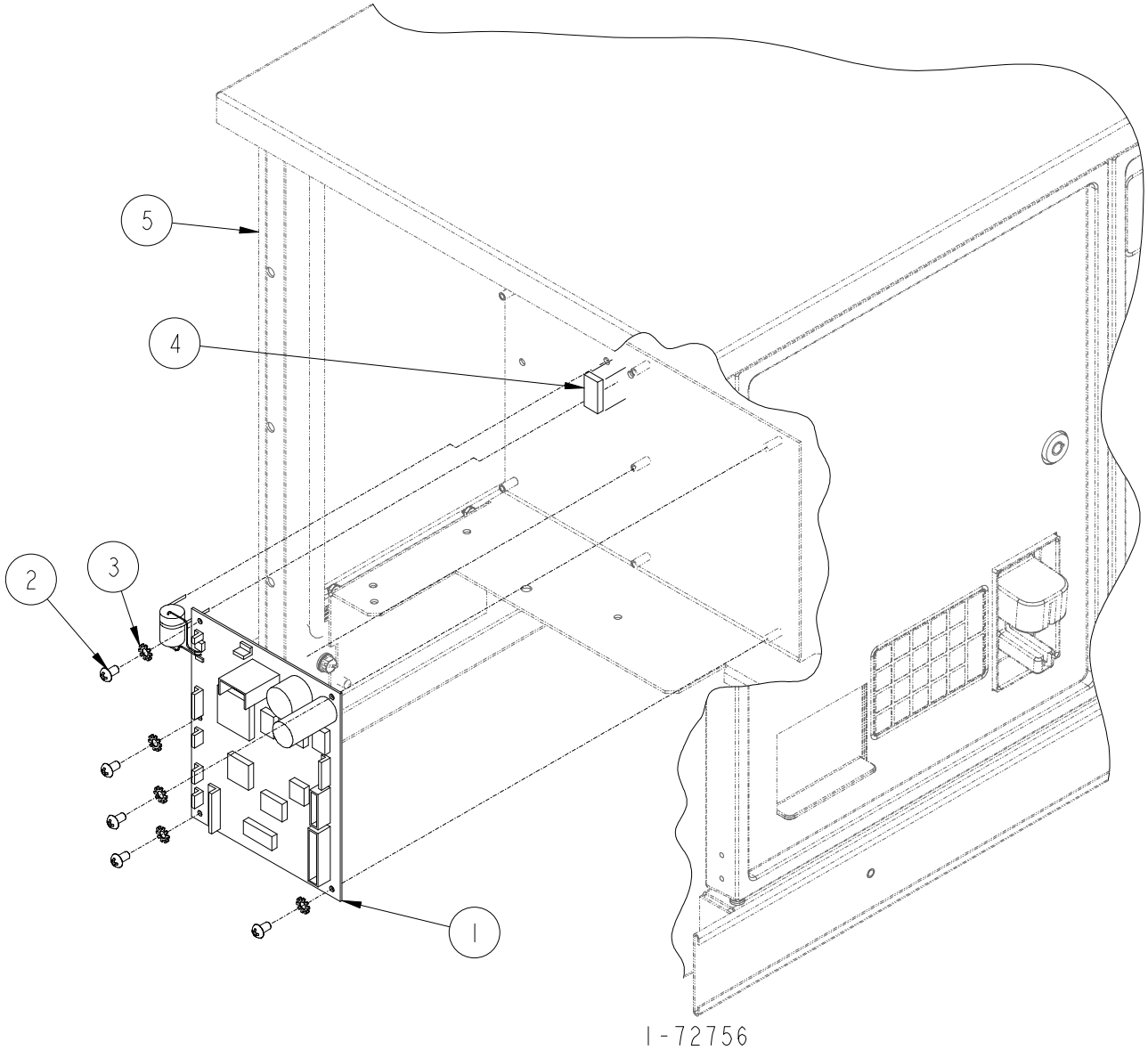

H400C SERIES INSIGHT BOARD ASSEMBLY

ITEM NO.	PART NO.	DESCRIPTION
1	Board Assembly	
	1-422335	Graphic DPT
	2-422335	InSight (Injected)
2	88-50021	#6-32 x 1/4" Long Phillips Round Head Machine Screw
3	03-50762	#6 Shakeproof Lockwasher
4	31-232722	Cushion
5	For parts call out of Head Assembly see: 72758	
	Reference for Tokheim internal use only:	
	321084	Head Assembly

1-72756

ROUTER BOARD ASSEMBLY
(FOR TI*RFID OR BAR CODE SCANNER)
H300C SERIES

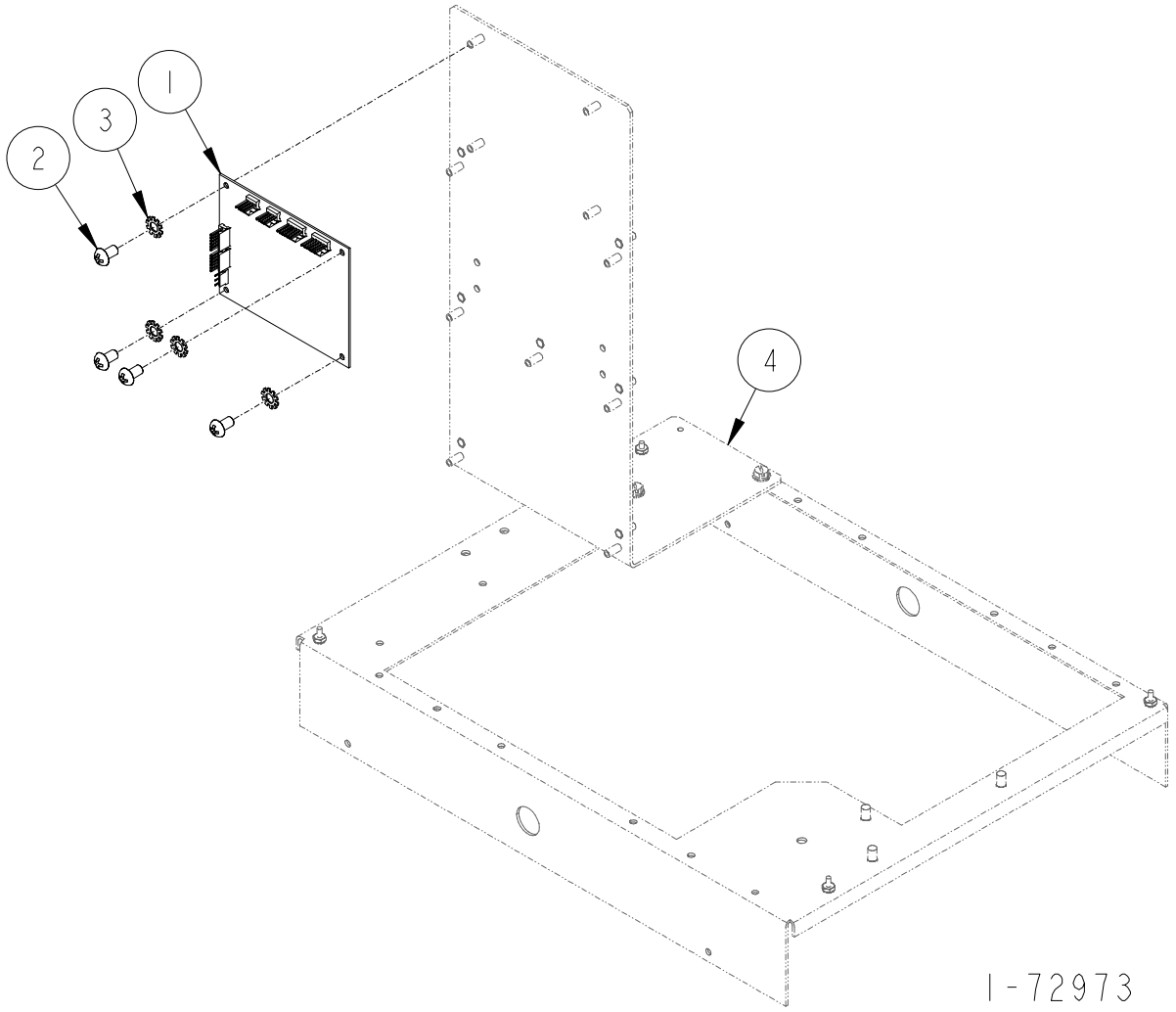

ROUTER BOARD ASSEMBLY
(FOR TI*RFID OR BAR CODE SCANNER)
H300C SERIES

ITEM NO.	PART NO.	DESCRIPTION
1	1-422782	Router Board Assembly
2	88-50021	#6-32 x 1/4" Long Phillips Round Head Screw
3	03-50762	#6 Shakeproof Lockwasher
4	For parts call out of:	
	72764	H400C Series DPT Board Assembly
	72767	H400C Series INSIGHT Board Assembly
	72768	H300C Series Head Assembly
	Reference for Tokheim internal use only:	
	321096	Head Assembly

1-72973

5
A

ROUTER BOARD ASSEMBLY
(FOR TI*RFID OR BAR CODE SCANNER)
H400C SERIES

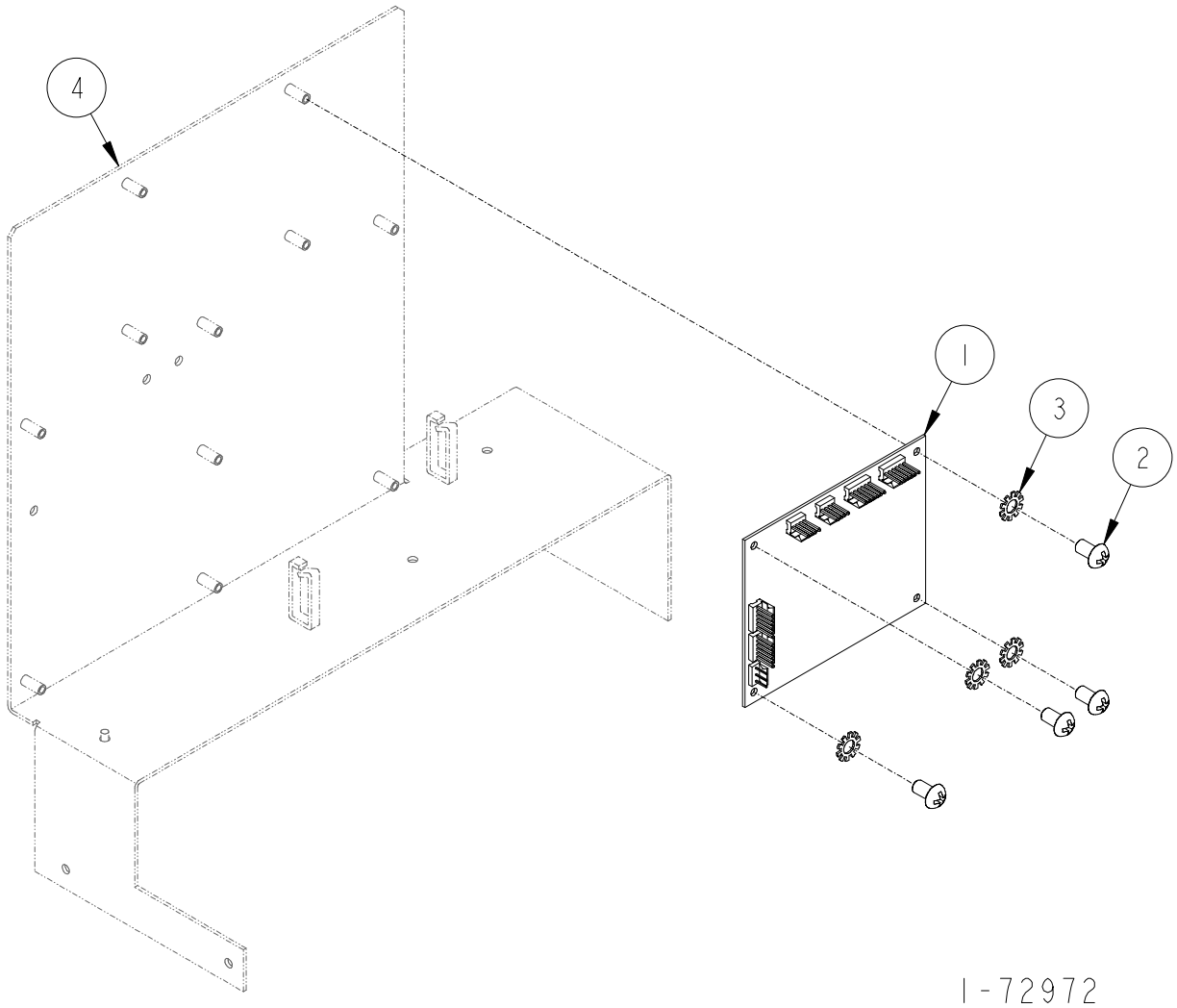

ROUTER BOARD ASSEMBLY
(FOR TI*RFID OR BAR CODE SCANNER)
H400C SERIES

ITEM NO.	PART NO.	DESCRIPTION
1	1-422782	Router Board Assembly
2	88-50021	#6-32 x 1/4" Long Phillips Round Head Screw
3	03-50762	#6 Shakeproof Lockwasher
4	For parts call out of:	
	72755	H400C Series DPT Board Assembly
	72756	H400C Series INSIGHT Board Assembly
	72758	H400C Series Head Assembly
	Reference for Tokheim internal use only:	
	321084	Head Assembly

1-72972

5
A

CASH ACCEPTOR MOUNTING ASSEMBLY

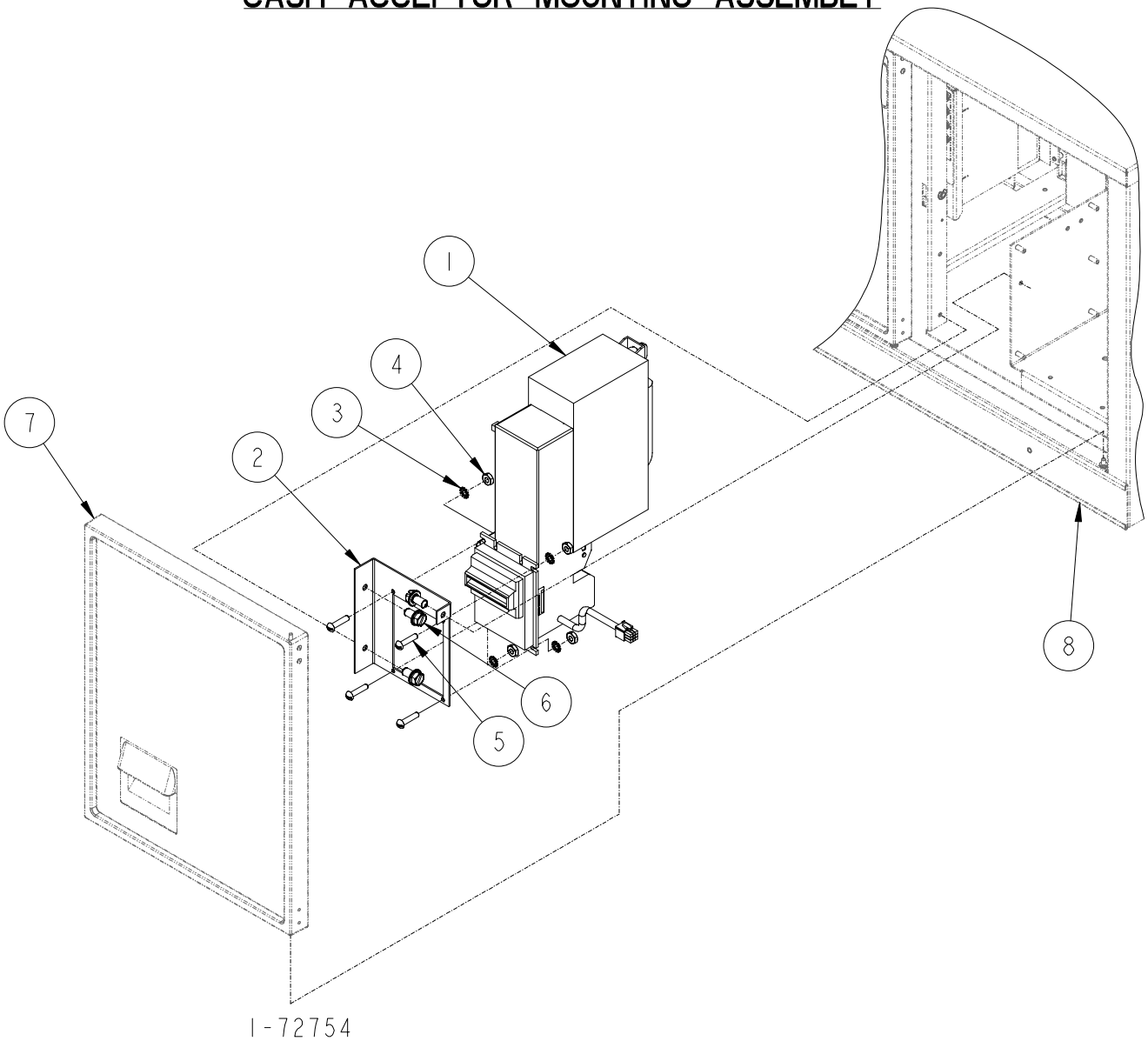

CASH ACCEPTOR MOUNTING ASSEMBLY

ITEM NO.	PART NO.	DESCRIPTION
1	2-321055	Locking Cassette Only
	3-321055	Cash Acceptor with Locking Cassette
2	1-321129	Cash Acceptor Bracket
3	04-50761	#8 Shakeproof Lockwasher
4	04-50211	#8-32 Hex Machine Nut
5	178-50001	#8-32 x 3/4" Long Round Head Machine Screw
6	69-55392	1/4 x 1/2" Long Hex Washer Head Tapping Screw
7	For parts call out of Cash Acceptor Dial see 72776.	
8	For parts call out of Head Assembly see 72758.	

Reference for Tokheim internal use only:

321084 Head Assembly

1-72754

SECTION 3A

898 Meter & Hydraulics

Page Number

Meter & Transfer Body Assembly 3A-2, 3A-3

Gear Train & Totalizer Assembly 3A-4, 3A-5

Meter & Hydraulics Assembly

H311C, H312C, H322C, H324C, H411C, H412C,
H413C, H414C, H422C, H424C, H426C, H428C
H311D, H312D, H322D, H324D, H411D, H412D,
H413D, H414D, H422D, H424D, H426D, H428D 3A-6, 3A-7

H311C-B3/5, H322C-B3/5, H411C-B3/4,
H422C-B3/4, H424C-B3/4 ..... 3A-8, 3A-9

H413C-EB, H426C-EB 3A-10, 3A-11

H414C-EB, H428C-EB 3A-12, 3A-13

898 Positive Displacement Type Meter 3A-14, 3A-15

METER & TRANSFER BODY ASSEMBLY

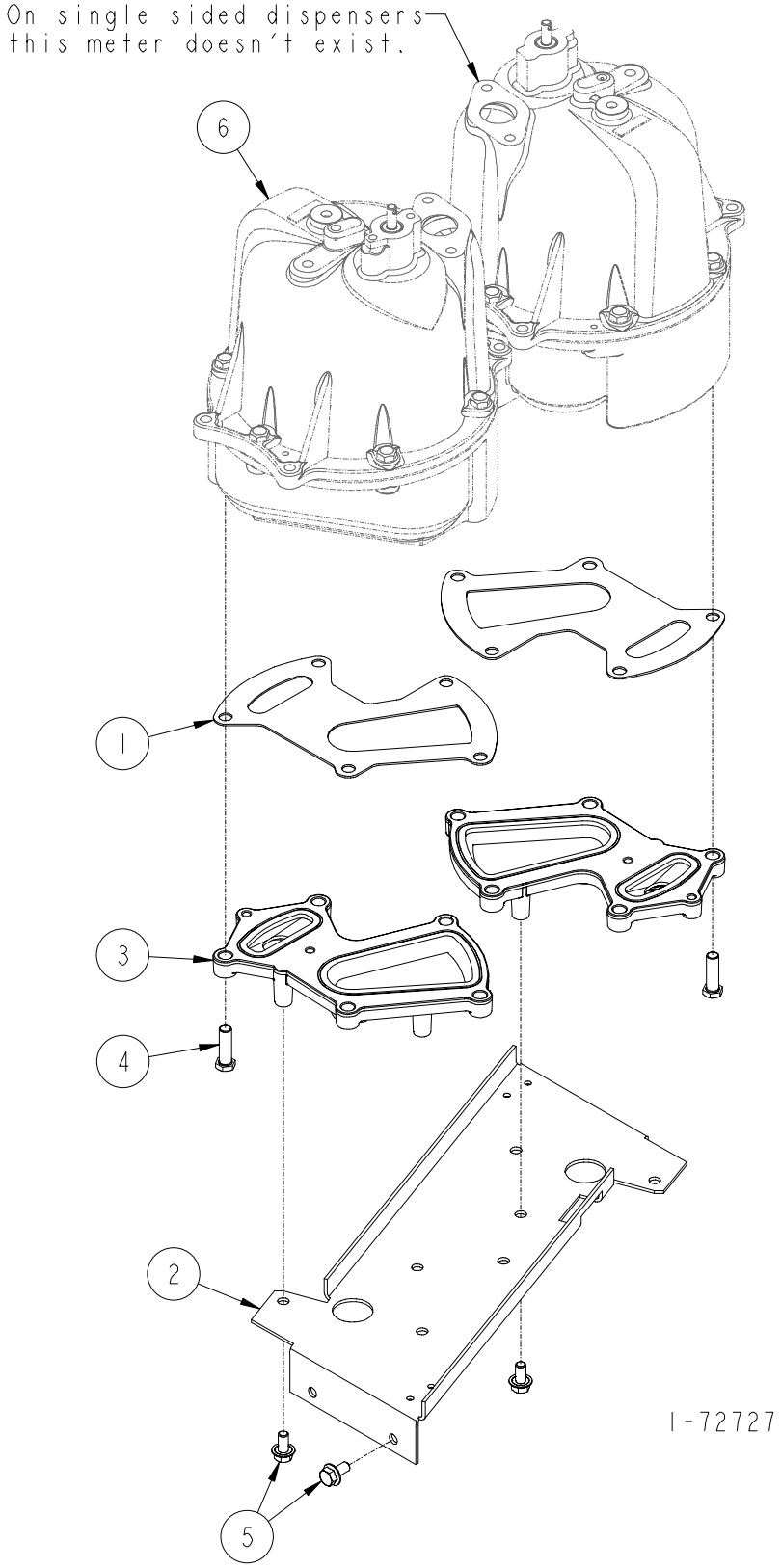

METER & TRANSFER BODY ASSEMBLY

ITEM NO.	PART NO.	DESCRIPTION
1	1-38082	Meter Transfer Body Gasket
2	Meter Support	
	1-422636	Totalizer Bracket bolts on (Old Design)
	1-423014	Totalizer Bracket part of meter support (New Design)
3	Meter Transfer Body	
	1-421978	All models except listed below
	2-421978	H413C-EB, H414C-EB, H426C-EB, H428C-EB
4	66-50361	3/8-16 x 1-1/4" Long Hex Head Cap Screw
5	35-55132	5/16-18 x 5/8" Long M-F Flange Whiz Lock Screw
6	For parts call out of 898 Positive Displacement Type Meter see 74372.	
	Reference for Tokheim internal use only:	
	233711	Meter Module
	320231	Meter Assembly

1-72727

GEAR TRAIN & TOTALIZER ASSEMBLY

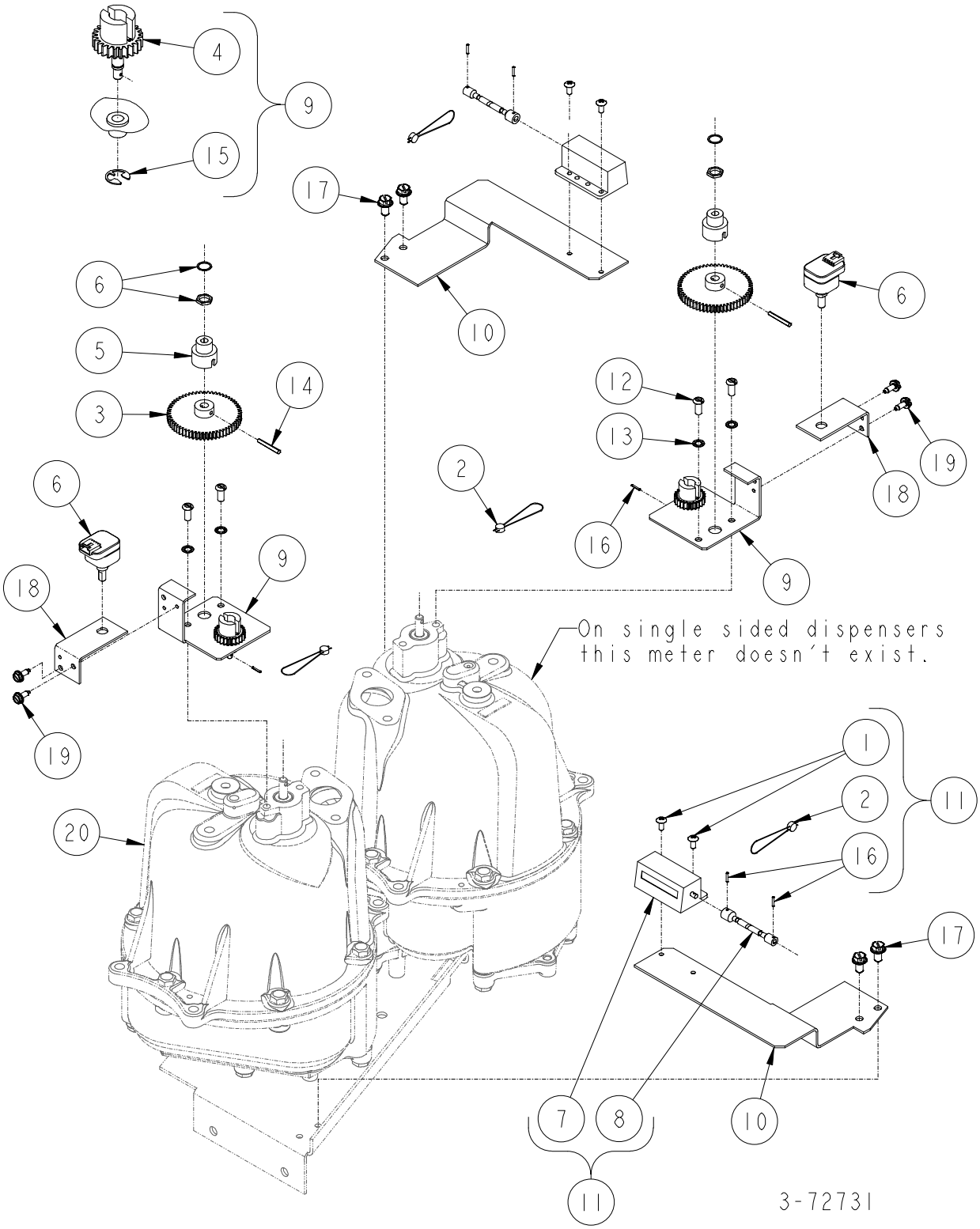

GEAR TRAIN & TOTALIZER ASSEMBLY

ITEM NO.	PART NO.	DESCRIPTION
1	09-55712	#8-32 x 3/8" Long Hex Washer Head Thread Cutting Screw
2	1-131438	Seal Wire & Seal
3	2-231801	60 Tooth Spur Gear
4	231823-2	Pulser Drive Assembly
5	1-233649	Pulser Coupling
6	2-233654	Optical Encoder (Pulser)
7	Totalizer	
	1-319419	Gallon
	2-319419	Liter
8	3-319468	Drive Cable
9	321090-1	Gear Train Assembly (Includes items 4 & 15)
10	1-321100	Totalizer Bracket
11	Totalizer Assembly (Includes items 1, 2, 7, 8 & 16)	
	321128-1	Gallon
	321128-2	Liter
12	326-50001	#12-24 x 1/2" Long Round Head Machine Screw
13	24-50761	#12 Shakeproof Lockwasher
14	44-51221	Groov-Pin
15	06-52482	Truarc Retaining Ring
16	4-52901	Roll Pin
17	69-55392	1/4 x 1/2" long Hex Head Washer Head Tapping Screw
18	1-233734	Encoder Mounting Plate
19	21-55392	#6 x 3/8" Long Hex Washer Head Self Tapping Screw
20	For parts call out of Meter & Transfer Body Assembly see 72727.	
	Reference for Tokheim internal use only:	
	233711	Measure Module
	321089	Meter & Hydraulic Assembly

3-72731

3
A

METER & HYDRAULICS ASSEMBLY

(H311C, H312C, H322C, H324C, H311D, H312D, H322D & H324D)
(H411C, H412C, H413C, H422C, H424C, H426C, H428C)
(H411D, H412D, H413D, H422D, H424D, H426D, H428D)

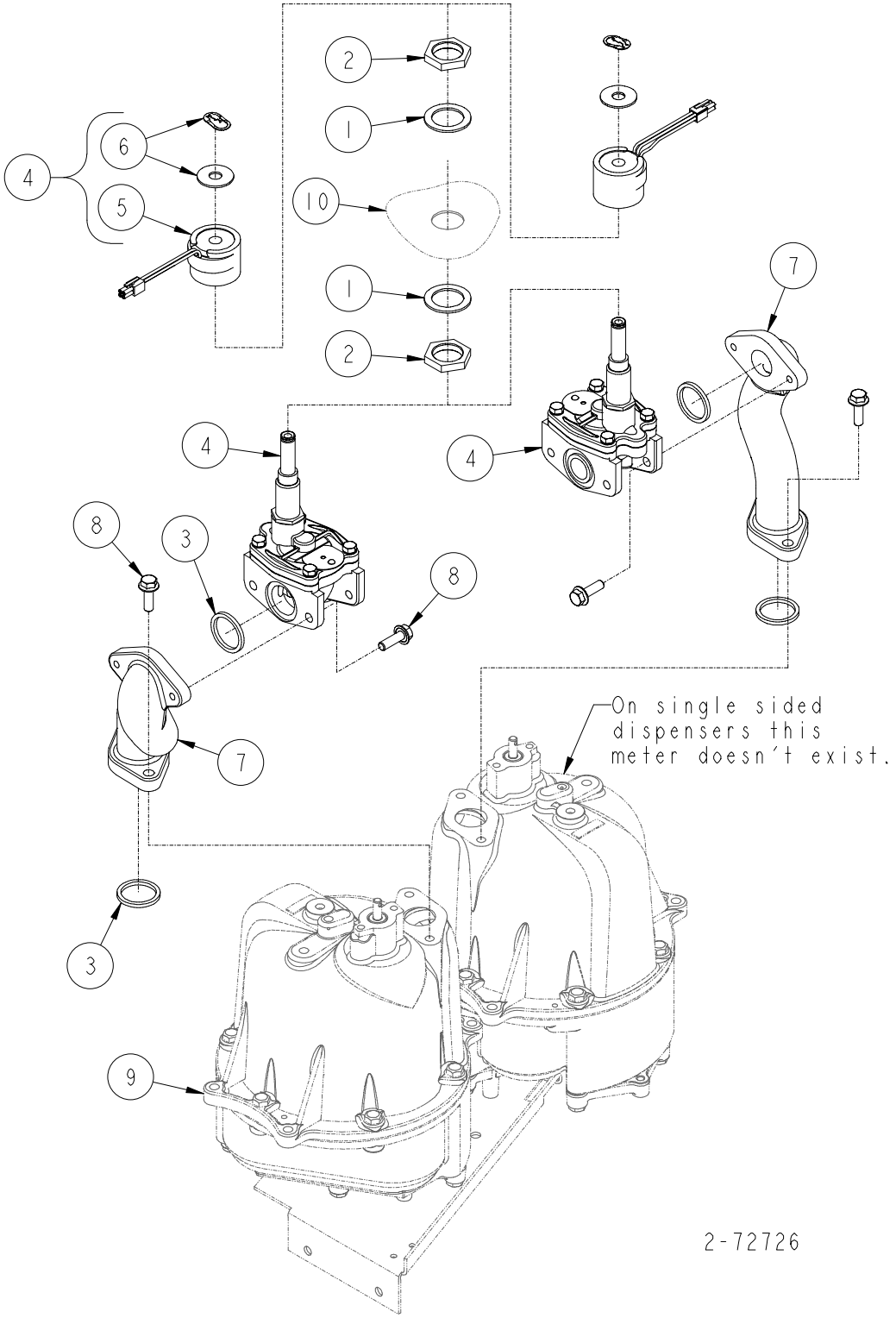

METER & HYDRAULICS ASSEMBLY

(H311C, H312C, H322C, H324C)
(H411C, H412C, H413C, H422C, H424C, H426C, H428C)
(H311D, H312D, H322D, H324D)
(H411D, H412D, H413D, H422D, H424D, H426D, H428D)

ITEM NO.	PART NO.	DESCRIPTION
1	1-132715	Conduit Washer
2	1-130590	1/2" Conduit Nut
3	13-313235	Gasket
4	Control Valve (Solenoid)	
	1-321094	120V (Tapped one flange side & thru on other side)
	2-321094	240V (Tapped one flange side & thru on other side)
	3-321094	240V (Brazil) (Tapped one flange side & thru on other side)
	9-321094	120V (Tapped on both flange sides)
	10-321094	240V (Tapped on both flange sides)
	11-321094	240V (Brazil) (Tapped on both flange sides)
5	Control Valve Coil (Solenoid)	
	6-321094	120V/60mhz
	7-321094	240V/60mhz
	14-321094	230V/50mhz
6	8-321094	Solenoid Assembly Hardware Kit
7	Meter Outlet	
	1-422604	Tapped both flange sides
	2-422604	Tapped one flange side & thru on the other flange
8	38-55132	5/16-18 x 1" Long M-F Flange Whiz Lock Screw
9	For parts call out of Meter & Transfer Body Assembly see 72727.	
10	For parts call out of Chassis Assembly see:	
	72779	H300C & H300DSeries
	72724	H400C & H400D Series
	Reference for Tokheim internal use only:	
	321089	Meter & Hydraulic Assembly

2-72726

METER & HYDRAULICS ASSEMBLY

(H311C-B3/5, H322C-B3/5, H411C-B3/4, H422C-B3/4, H424C-B3/4)

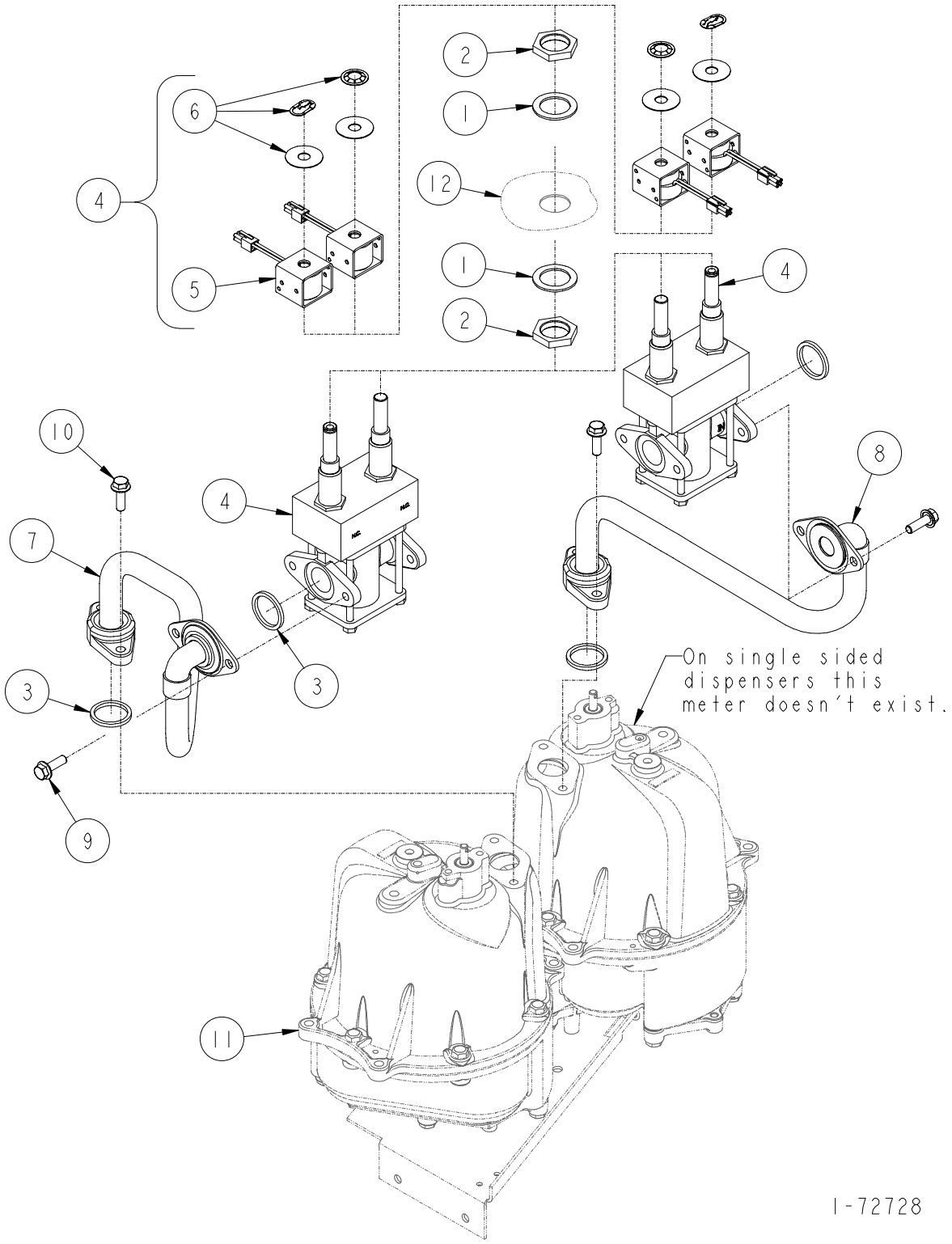

METER & HYDRAULICS ASSEMBLY

(H311C-B3/5, H322C-B3/5)
(H411C-B3/4, H422C-B3/4, H424C-B3/4)

ITEM NO.	PART NO.	DESCRIPTION
1	1-132715	Conduit Washer
2	1-130590	1/2" Conduit Nut
3	13-313235	Gasket
4	1-321103	Blend Valve
5	3-321103	Blend Valve Coil
6	4-321103	Blend Valve Assembly Hardware Kit
7	Fuel Discharge Tube	
	1-321137	H411C-B3/4, H422C-B3/4, H424C-B3/4
	1-321151	H311C-B3/5 , H322C-B3/5
8	Fuel Discharge Tube	
	1-321138	H422C-B3/4, H424C-B3/4
	1-321152	H322C-B3/5
9	35-55132	5/16-18 x 5/8" Long M-F Flange Whiz Lock Screw
10	38-55132	5/16-18 x 1" Long M-F Flange Whiz Lock Screw
11	For parts call out of Meter & Transfer Body Assembly see 72727.	
12	For parts call out of Chassis Assembly see:	
	72779	H300C Series
	72724	H400C Series
	Reference for Tokheim internal use only:	
	321089	Meter & Hydraulic Assembly

1-72728

3
A

METER & HYDRAULICS ASSEMBLY

(H413C-EB & H426C-EB)

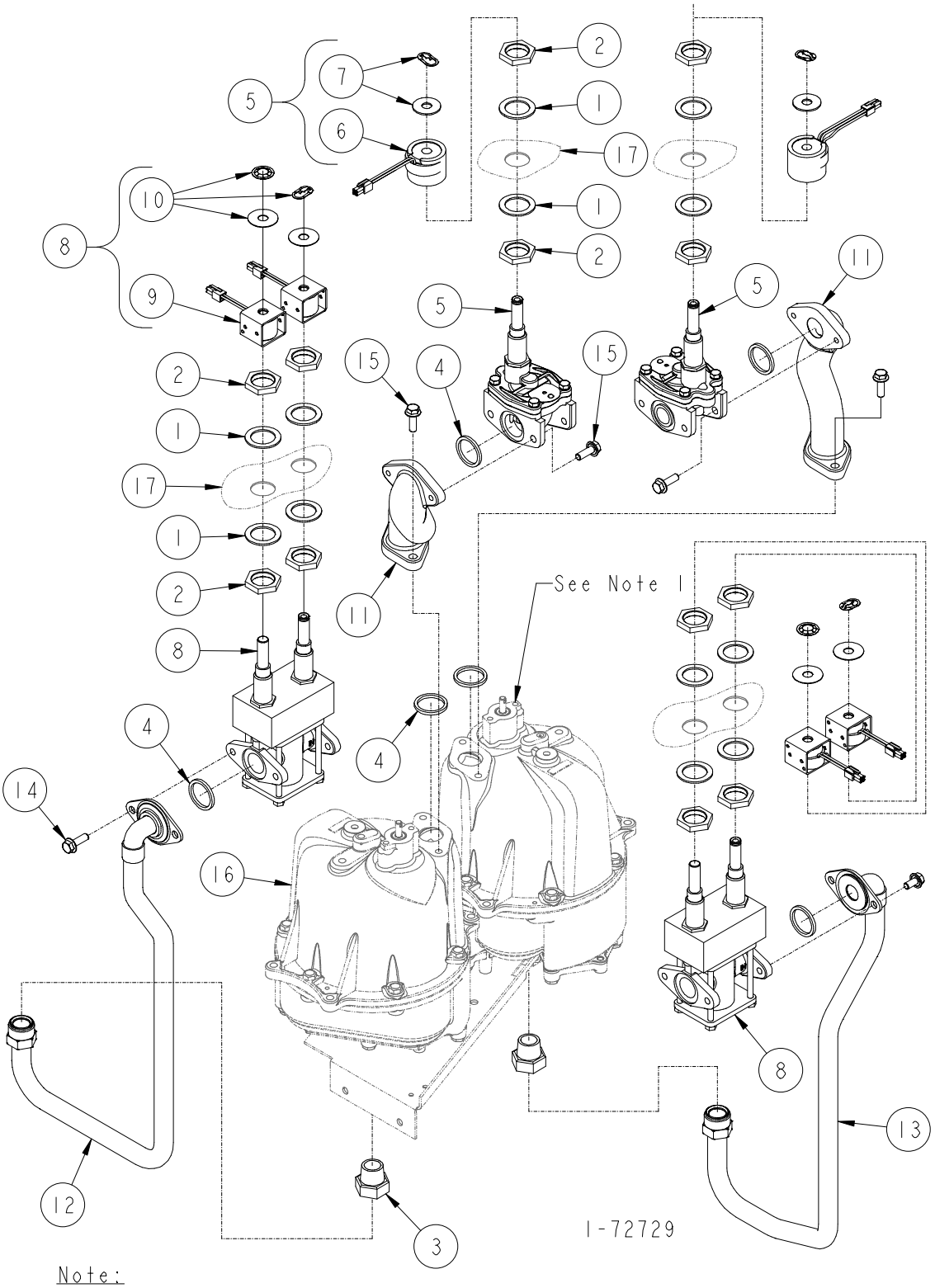

Note:
1. On single sided dispensers this meter doesn't exist.

METER & HYDRAULICS ASSEMBLY
(H413C-EB & H426C-EB)

ITEM NO.	PART NO.	DESCRIPTION
1	1-132715	Conduit Washer
2	1-130590	1/2" Conduit Nut
3	1-230994	Connector - Inverted Flare
4	13-313235	Gasket
5	Control Valve (Control)	
	1-321094	120V (Tapped one flange side & thru on other side)
	2-321094	240V (Tapped one flange side & thru on other side)
	3-321094	240V (Brazil) (Tapped one flange side & thru on other side)
	9-321094	120V (Tapped on both flange sides)
	10-321094	240V (Tapped on both flange sides)
	11-321094	240V (Brazil) (Tapped on both flange sides)
6	Control Valve Coil (Control)	
	6-321094	120V/60mhz
	7-321094	240V/60mhz
	14-321094	230V/50mhz
7	8-321094	Solenoid Assembly Hardware Kit
8	1-321103	Blend Valve
9	3-321103	Blend Valve Coil
10	4-321103	Blend Valve Assembly Hardware Kit
11	Meter Outlet	
	1-422604	Tapped both flange sides
	2-422604	Tapped one flange side & thru on the other flange
12	1-422708	Fuel Discharge Tube
13	1-422709	Fuel Discharge Tube
14	35-55132	5/16-18 x 5/8" Long M-F Flange Whiz Lock Screw
15	38-55132	5/16-18 x 1" Long M-F Flange Whiz Lock Screw
16	For parts call out of Meter & Transfer Body Assembly see 72727.	
17	For parts call out of Chassis Assembly see 72724.	

Reference for Tokheim internal use only:
321089 Meter & Hydraulic Assembly

1-72729

METER & HYDRAULICS ASSEMBLY
(H414C-EB & H428C-EB)

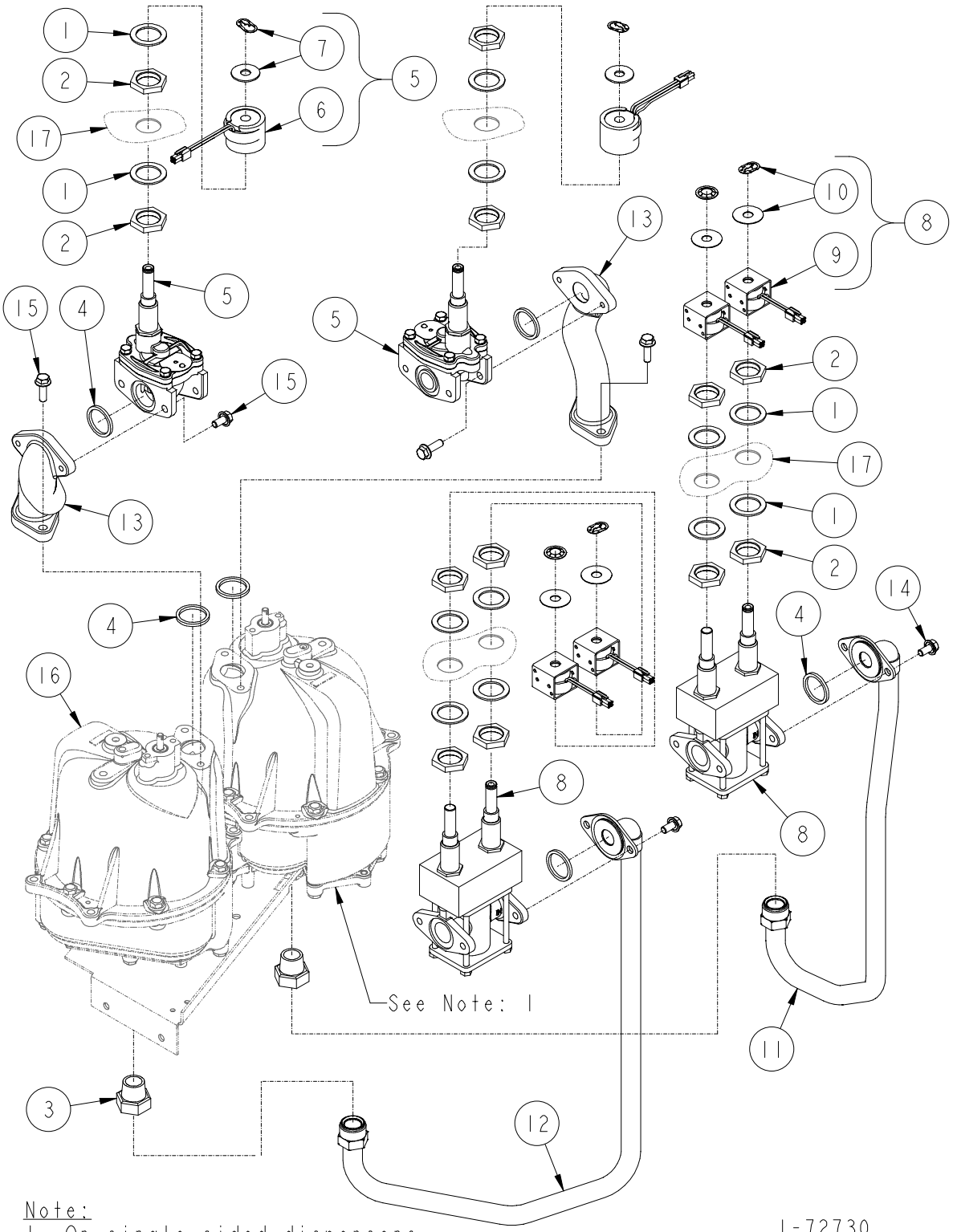

Note:
1. On single sided dispensers this meter doesn't exist.

1-72730

METER & HYDRAULICS ASSEMBLY
(H414C-EB & H428C-EB)

ITEM NO.	PART NO.	DESCRIPTION
1	1-132715	Conduit Washer
2	1-130590	1/2" Conduit Nut
3	1-230994	Connector - Inverted Flare
4	13-313235	Gasket
5	Control Valve (Solenoid)	
	1-321094	120V (Tapped one flange side & thru on other side)
	2-321094	240V (Tapped one flange side & thru on other side)
	3-321094	240V (Brazil) (Tapped one flange side & thru on other side)
	9-321094	120V (Tapped on both flange sides)
	10-321094	240V (Tapped on both flange sides)
	11-321094	240V (Brazil) (Tapped on both flange sides)
6	Control Valve Coil (Solenoid)	
	6-321094	120V/60mhz
	7-321094	240V/60mhz
	14-321094	230V50mhz
7	8-321094	Solenoid Assembly Hardware Kit
8	1-321103	Blend Valve
9	3-321103	Blend Valve Coil
10	4-321103	Blend Valve Assembly Hardware Kit
11	1-321176	Fuel Discharge Tube
12	1-321177	Fuel Discharge Tube
13	Meter Outlet	
	1-422604	Tapped both flange sides
	2-422604	Tapped one flange side & thru on the other flange
14	35-55132	5/16-18 x 5/8" Long M-F Flange Whiz Lock Screw
15	38-55132	5/16-18 x 1" Long M-F Flange Whiz Lock Screw
16	For parts call out of Meter & Transfer Body Assembly see 72727.	
17	For parts call out of Chassis Assembly see 72724.	

Reference for Tokheim internal use only:
321089 Meter & Hydraulic Assembly

1-72730

898 POSITIVE DISPLACEMENT TYPE METER

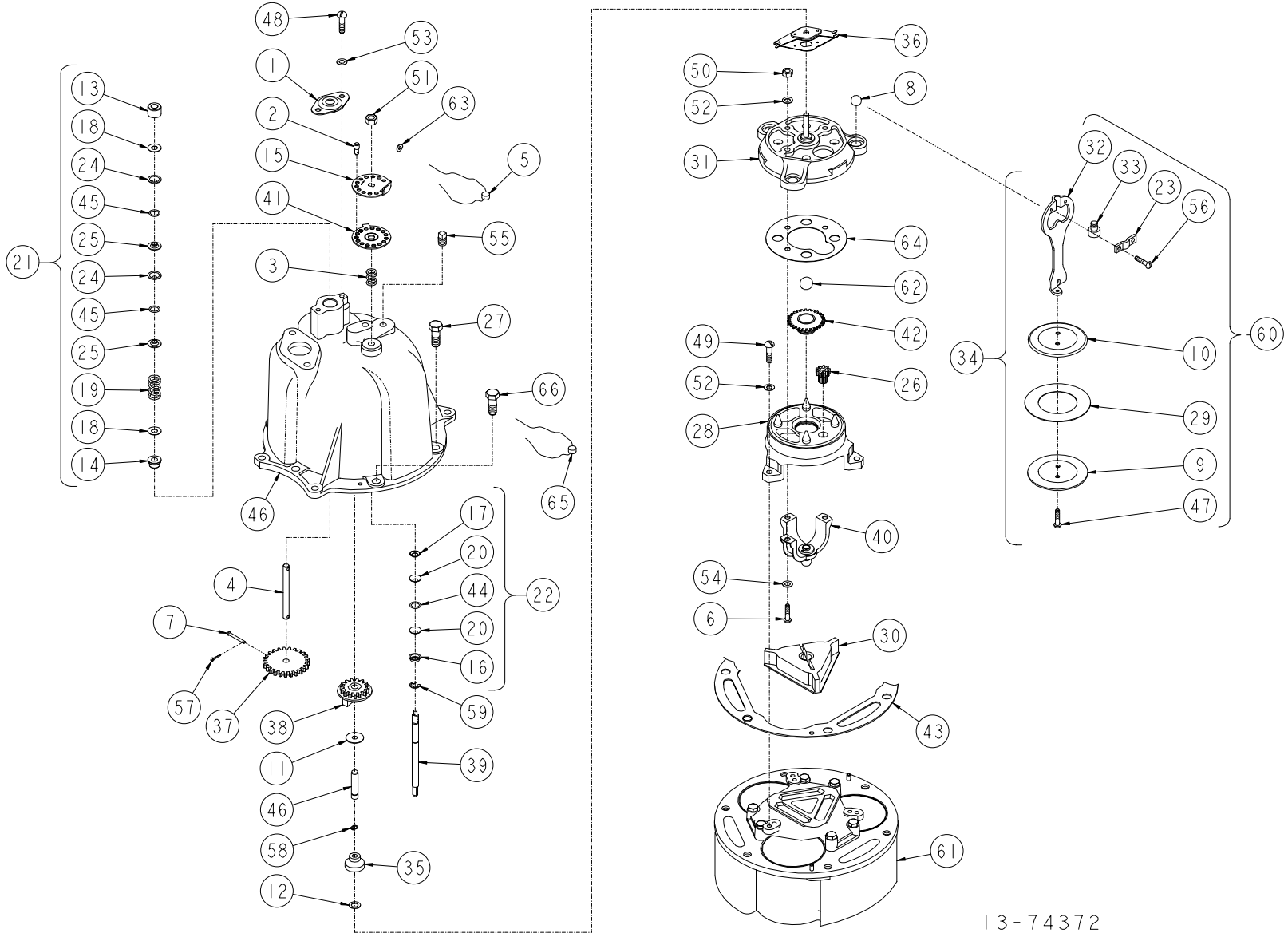

898 POSITIVE DISPLACEMENT TYPE METER

ITEM NO.	PART NO.	DESCRIPTION
1	1-19592	Packing Gland Plate
2	1-19602	Seal Pin
3	1-19743	Compensator Screw Spring
4	1-114815	Drive Shaft
5	1-118849	Seal & Seal Wire (6" Long)
6	1-119064	Special Screw
7	1-124144	Drive Shaft Pin
8	1-124588	1/2" Ball
9	1-125069	Plunger Cup Support
10	1-125071	Plunger Disc
11	1-125095	Washer
12	1-125103	Washer
13	125118-1	Upper Bearing Assembly
14	125154-1	Bearing Assembly
15	1-125243	Compensator Index Disc
16	1-125308	Seal Half
17	1-125309	Seal Wedge
18	1-125315	Washer
19	1-125357	Packing Spring
20	1-125360	Seal
21	125420-1	Meter Drive Shaft Packing Kit
22	125478-1	Compensator Shaft Seal Kit
23	1-125966	Bearing Retainer
24	1-126898	Seal (Black)
25	1-126902	Seal Retaining Ring
26	1-129607	Compensator Pinion
27	3/8-16 x 1" Long	
	1-320407	Torx Drive Screw
	2-320407	Torx Drive Screw (For Seal Wire)
	65-50361	Hex Head Cap Screw
28	218236-2	Main Pivot Bracket Assy. With Pins
29	218769-1	Plunger Cup Kit (Set Of 3 Cups)
30	1-219330	Valve
31	219331-1	Wobble Plate With Slack Roller Post
32	1-219377	Connector
33	1-219378	Bearing Seat
34	219407-2	Plunger Assembly
35	219800-1	Slack Roller Assembly
36	221403-1	Slack Spring Assembly
37	Drive Shaft Gear	
	1-222081	Gallons & Liters
	217195-2	Assembly (Imperial Gallons)
38	Counter Drive Gear Complete	
	218556-2	Imperial Gallons
	1-232282	Gallons
	1-232282	Liter
39	1-224081	Compensator Shaft
40	224709-5	Bracket & Pin Assembly
41	1-226085	Index Plate
42	125079-1	Main Pivot Assembly
43	1-38083	Meter Body Gasket
44	5-318940	"O" Ring (.362 Dia.)
45	6-318940	"O" Ring (.487 Dia.)
46	420557-1	Meter Cover And Gear Post Assembly
47	287-50001	#10-32 x 3/8" Long Round Head Machine Screw
48	326-50001	#12-24 x 1/2" Long Round Head Machine Screw
49	399-50001	1/4-20 x 3/4" Long Round Head Machine Screw
50	01-50301	1/4-20 Hex Nut
51	02-50301	5/16-18 Hex Nut
52	13-50641	1/4" Lockwasher
53	24-50761	#12 Lockwasher
54	42-50761	#14 Lockwasher
55	01-51911	1/8" Square Head Pipe Plug
56	28-55431	#10-32 x 3/8" Long Phillips Pan Head Sems Fastener
57	13-52870	1/16" Dia x 1/4" Lg. Cotter Pin
58	10-52922	Truarc Retaining Ring
59	12-53420	Truarc "E" Retaining Ring
60	232332-1	Plunger Kit (Contains Plunger Assembly, Bearing Retainer, Bearing Seat & Sems Fastener)
61	407488-11	Body & Seat Assy. With Pins
62	1-131327	5/8" Carbon Ball
63	04-50600	Washer
64	1-217934	Wobble Bearing Plate
65	1-124799	Seal Wire & Seal (18" Lg) (Brazil)
66	2-129513	3/8-16 x 1" Long Hex Head Seal Screw (Brazil)

For complete Meter Maintenance & Repair Kit order 225184-1

For complete Meter Cover Assembly order: (Item no. 5 & 46 not included)

407494-1	Gallons
407494-5	Imperial Gallons
415282-30	Liters

For complete Final Assy (898-K Meter) order:

416873-25	Imperial Gallons
416873-32	Liters
416873-37	Gallons

13-74372

SECTION 3B

LC Meter & Hydraulics

Page Number

LC Meter & Gear Train Assembly 3B-2, 3B-3

LC Meter Inlet Hydraulics 3B-4, 3B-5

LC Meter Outlet Hydraulics 3B-6, 3B-7

Master Systems 3B-8, 3B-9

Master/Satellite Systems 3B-10, 3B-11

Satellite Systems 3B-12, 3B-13

Satellite Hydraulics 3B-14, 3B-15

Totalizer Assembly 3B-16, 3B-17

LC METER & GEAR TRAIN ASSEMBLY

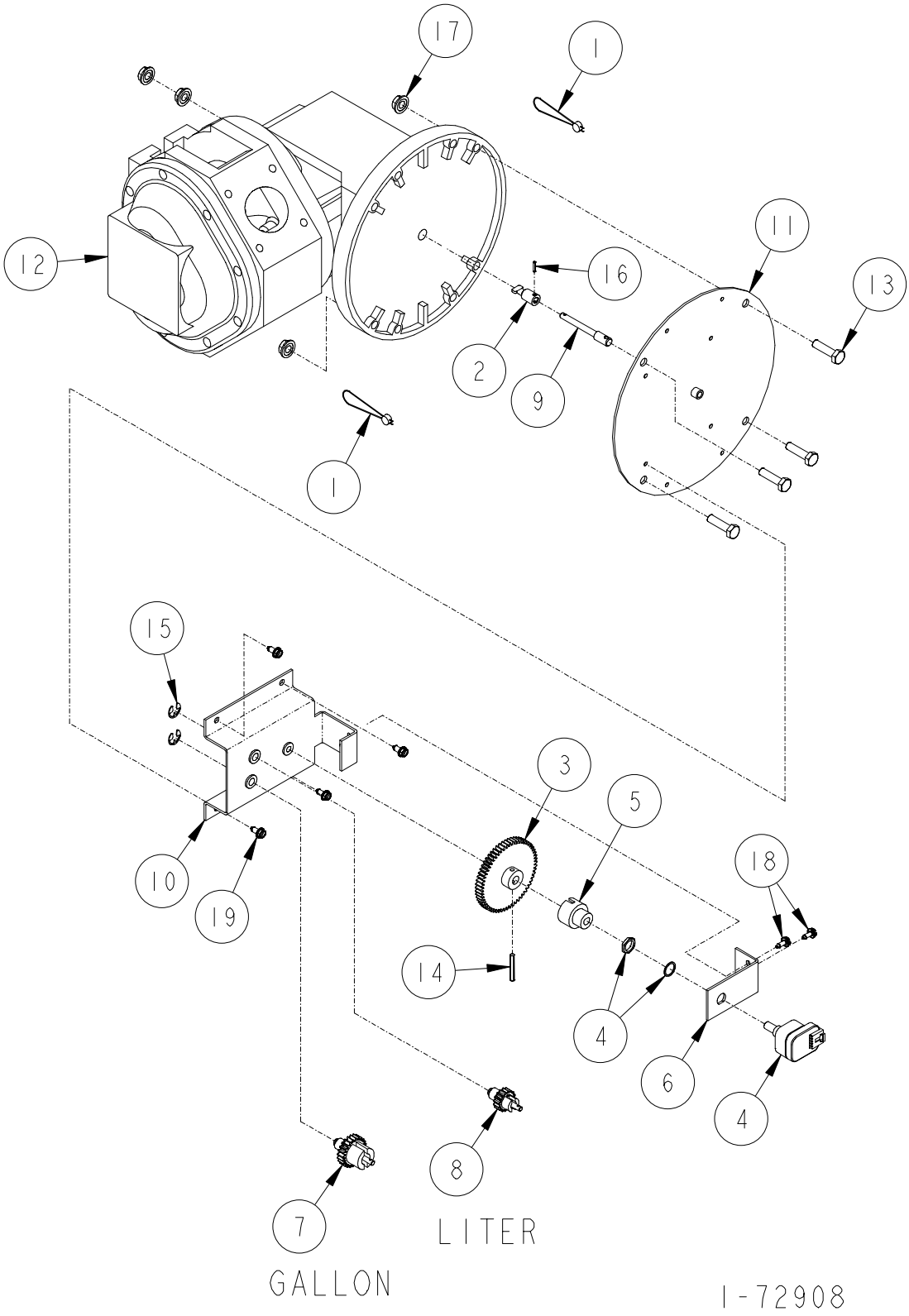

LC METER & GEAR TRAIN ASSEMBLY

ITEM NO.	PART NO.	DESCRIPTION
1	1-131438	Seal Wire & Seal
2	1-230309	Coupling
3	2-231801	60 Tooth Spur Gear
4	2-233654	Optical Encoder
5	1-233649	Pulser Coupling
6	1-233734	Encoder Mounting Plate
7	233790-1	Pulser Drive Assembly (Gallon)
8	233790-2	Pulser Drive Assembly (Liter)
9	1-233793	Drive Shaft
10	321423-3	Gear Train & Bushing Assembly
11	321427-1	Cover Plate Assembly
12	3-419902	LC Meter
13	05-50361	1/4-20 x 1" Long Hex Head Cap Screw
14	44-51221	Groov-Pin
15	06-52482	Truarc Retaining Ring
16	4-52901	Roll Pin
17	01-54752	1/4-20 M-F Flange Whiz Lock Nut
18	21-55392	#6 x 3/8" long Hex Head Washer Head Tapping Screw
19	23-55392	#8 x 3/8" long Hex Head Washer Head Tapping Screw

Reference for Tokheim internal use only:

321423	Gear Train Assembly
321425	Meter & Hydraulic Assembly

1-72908

3
B

LC METER INLET HYDRAULICS

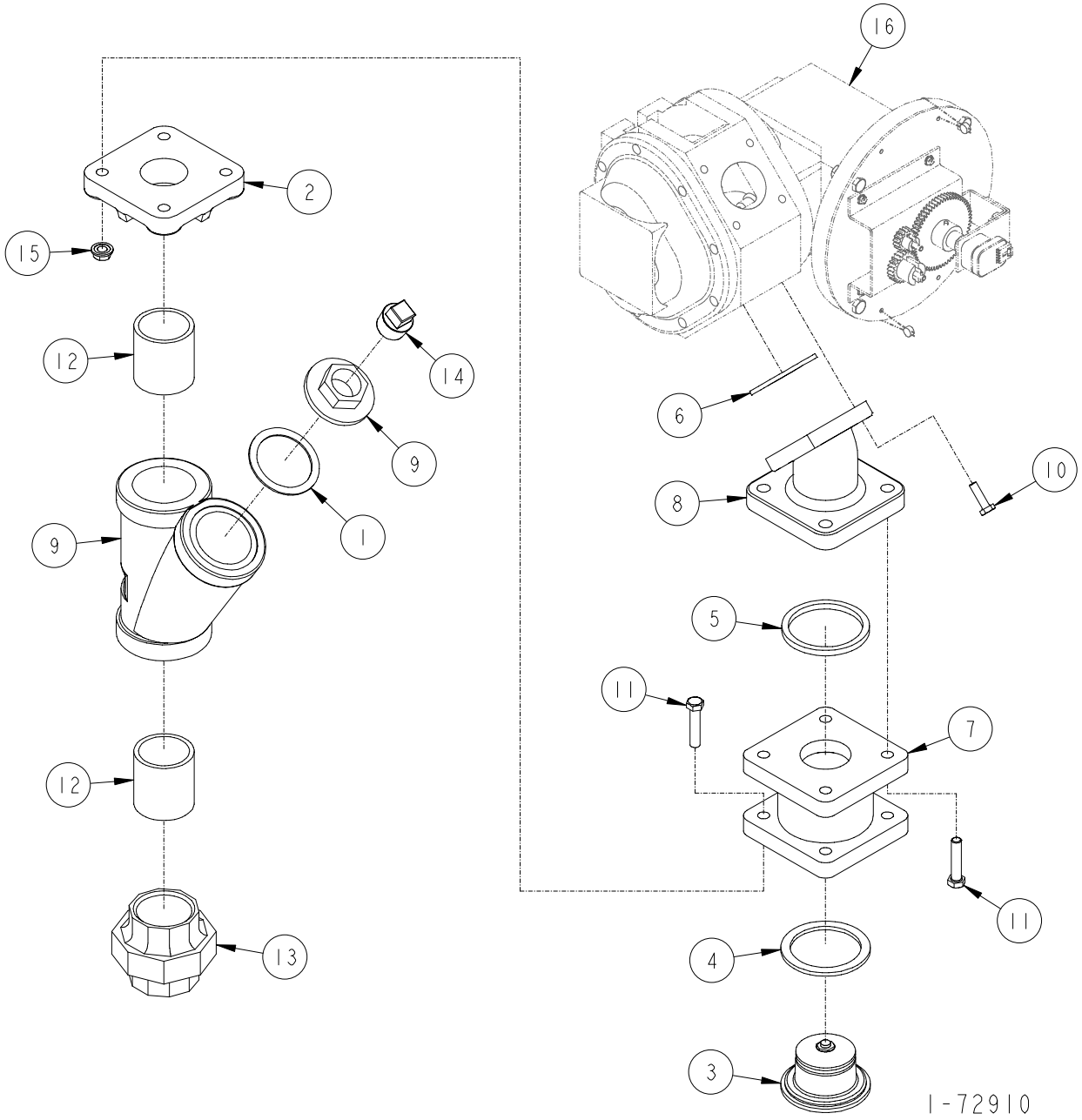

LC METER INLET HYDRAULICS

ITEM NO.	PART NO.	DESCRIPTION
1	1-132471	"Y" Strainer Gasket
2	5-221447	Companion Flange
3	225981-1	Check Valve Assembly
4	15-313235	Gasket
5	18-313235	Gasket
6	19-313235	Gasket
7	1-319057	Check Valve Housing
8	2-420233	Meter Elbow
9	1-420697	"Y" Strainer (With 40 Mesh Stainless Steel Screen)
	2-420697	40 Mesh Stainless Steel Screen "Only"
10	04-50361	1/4-20 x 7/8" Long Hex Head Cap Screw
11	37-50361	5/16-18 x 1-1/2" Long Hex Head Cap Screw
12	118-50560	1-1/2" x 2" Long Pipe Nipple
13	07-51780	1-1/2" Union Female
14	05-51901	Pipe Plug
15	02-54752	5/16-18 M-F Flange Whiz Lock Nut
16	For parts call out of Chassis Assembly see 72779.	

Reference for Tokheim internal use only:

321425	Meter & Hydraulic Assembly
321435	Chassis Assembly

1-72910

3
B

LC METER OUTLET HYDRAULICS

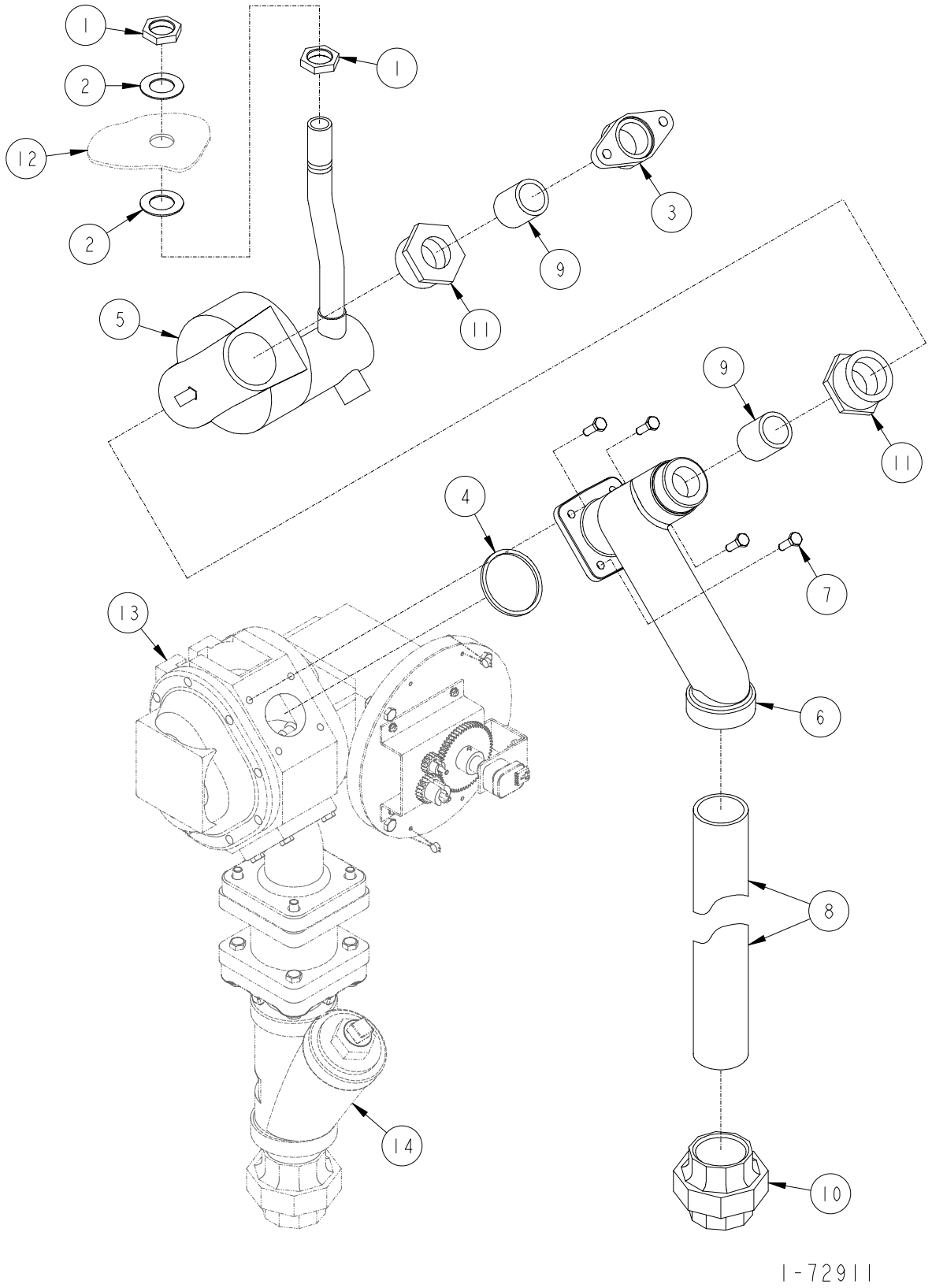

LC METER OUTLET HYDRAULICS

ITEM NO.	PART NO.	DESCRIPTION
1	1-130590	Hex Lock Nut
2	1-132715	Conduit Washer
3	5-220923	Meter Flange
4	8100047	Gasket
5	Control Valve Assembly (Includes Items 3, 9 & 11)	
	422989-1	220 Volt
	422989-2	120 Volt
6	8100322	Manifold LC Meter Outlet Side
7	04-50361	1/4-20 x 7/8" Long Hex Head Cap Screw
8	337-50510	1-1/2 x 15.781 Long Pipe
9	85-50660	1" x 1-1/2" Long Pipe Nipple
10	07-51780	1-1/2" Union Female
11	22-51850	1-1/2" x 1" Hex Bushing
12	For parts call out of Chassis Assembly see 72779.	
13	For parts call out of LC Meter & Gear Train Assembly see 72908.	
14	For parts call out of LC Meter Inlet Hydraulics see 72909.	
	Reference for Tokheim internal use only:	
	321425	Meter & Hydraulic Assembly
	321435	Chassis Assembly

1-72911

MASTER/MASTER SYSTEM

H311C-RHVM, H312C-RHVMM, H322C-RHVMM

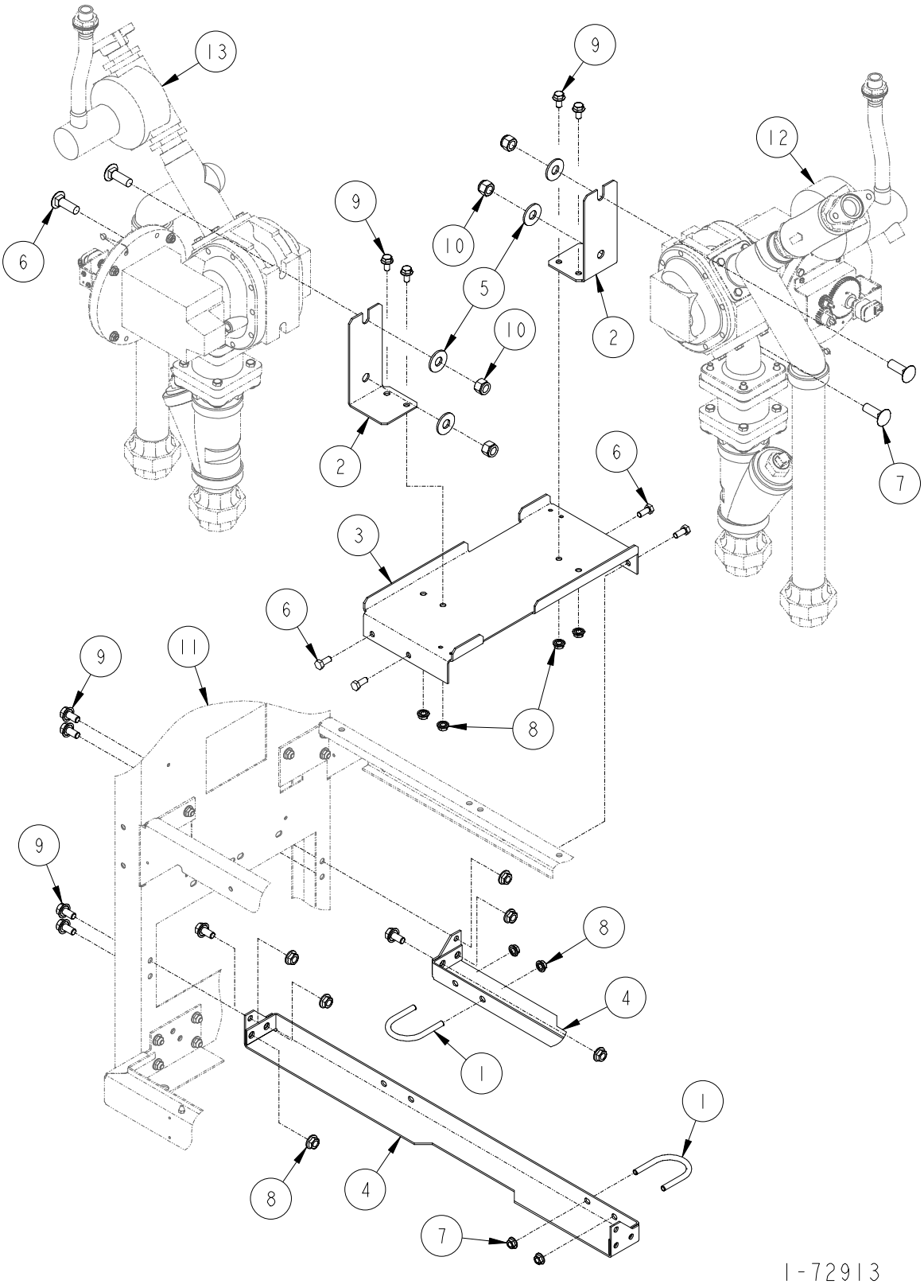

MASTER/MASTER SYSTEM

H311C-RHVM, H312C-RHVMM, H322C-RHVMM

ITEM NO.	PART NO.	DESCRIPTION
1	1-131336	"U" Bolt
2	1-321401	Meter Support Bracket
3	1-422884	Meter Support Plate
4	1-422962	Inlet Support Bracket
5	06-50612	1" Plate Washer
6	20-51491	5/16 x 5/8" Long Self Tapping Screw
7	115-52192	1/2-13 x 1-1/2" Long Carriage Bolt
8	02-54752	5/16-18 M-F Flange Whiz Lock Nut
9	35-55132	5/16-18 x 5/8" Long M-F Flange Whiz Lock Screw
10	11-55531	1/2-13 Nylon Insert Lock Nut
11	For parts call out of Chassis Assembly see 72779.	
12	For parts call out of LC Meter Outlet Hydraulics see 72911. (H311C-RHVM side "A", H312C-RHVMM side "A", H322C-RHVMM)	
13	For parts call out of LC Meter Outlet Hydraulics see 72911. (H312C-RHVMM side "B", H322C-RHVMM side "B")	

Reference for Tokheim internal use only:

321435 Chassis Assembly

1-72913

3
B

MASTER/SATELLITE SYSTEM

H322C-RHVMS, H324C-RHVMS

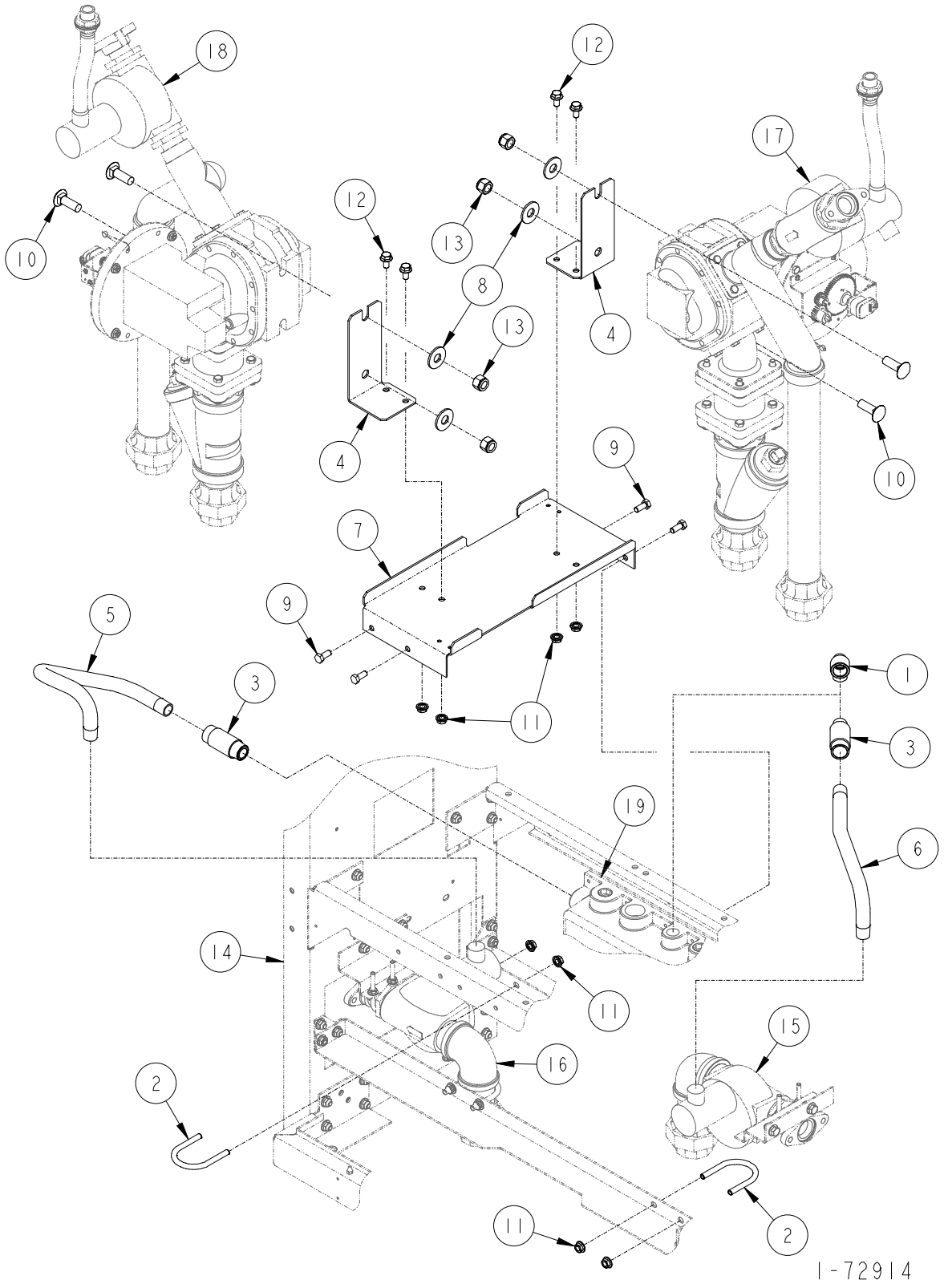

MASTER/SATELLITE SYSTEM

H322C-RHVMS, H324C-RHVMS

ITEM NO.	PART NO.	DESCRIPTION
1	1-128035	1/2" x 90° Conduit Street Elbow
2	1-131336	"U" Bolt
3	1-218941	1/2" Expansion Union (Male/Female)
4	1-321401	Meter Support Bracket
5	1-321428	Conduit
6	1-321430	Conduit
7	1-422884	Meter Support Plate
8	06-50612	1" Plate Washer
9	20-51491	5/16 x 5/8" Long Self Tapping Screw
10	115-52192	1/2-13 x 1-1/2" Long Carriage Bolt
11	02-54752	5/16-18 M-F Flange Whiz Lock Nut
12	35-55132	5/16-18 x 5/8" Long M-F Flange Whiz Lock Screw
13	11-55531	1/2-13 Nylon Insert Lock Nut
14	For parts call out of Chassis Assembly see 72779.	
15	For parts call out of Satellite Hydraulics see 72909. (H322C-RHVMS side "A", H324C-RHVMS side "A")	
16	For parts call out of Satellite Hydraulics see 72909. (H324C-RHVMS side "B")	
17	For parts call out of LC Meter Outlet Hydraulics see 72911. (H322C-RHVMS side "A", H324C-RHVMS side "A")	
18	For parts call out of LC Meter Outlet Hydraulics see 72911. (H322C-RHVMS side "B", H324C-RHVMS side "B")	
19	For parts call out of Connection Box Assembly see 72917.	

Reference for Tokheim internal use only:

321435 Chassis Assembly

1-72914

3
B

SATELLITE SYSTEM

H311C-RHVS, H312C-RHVSS

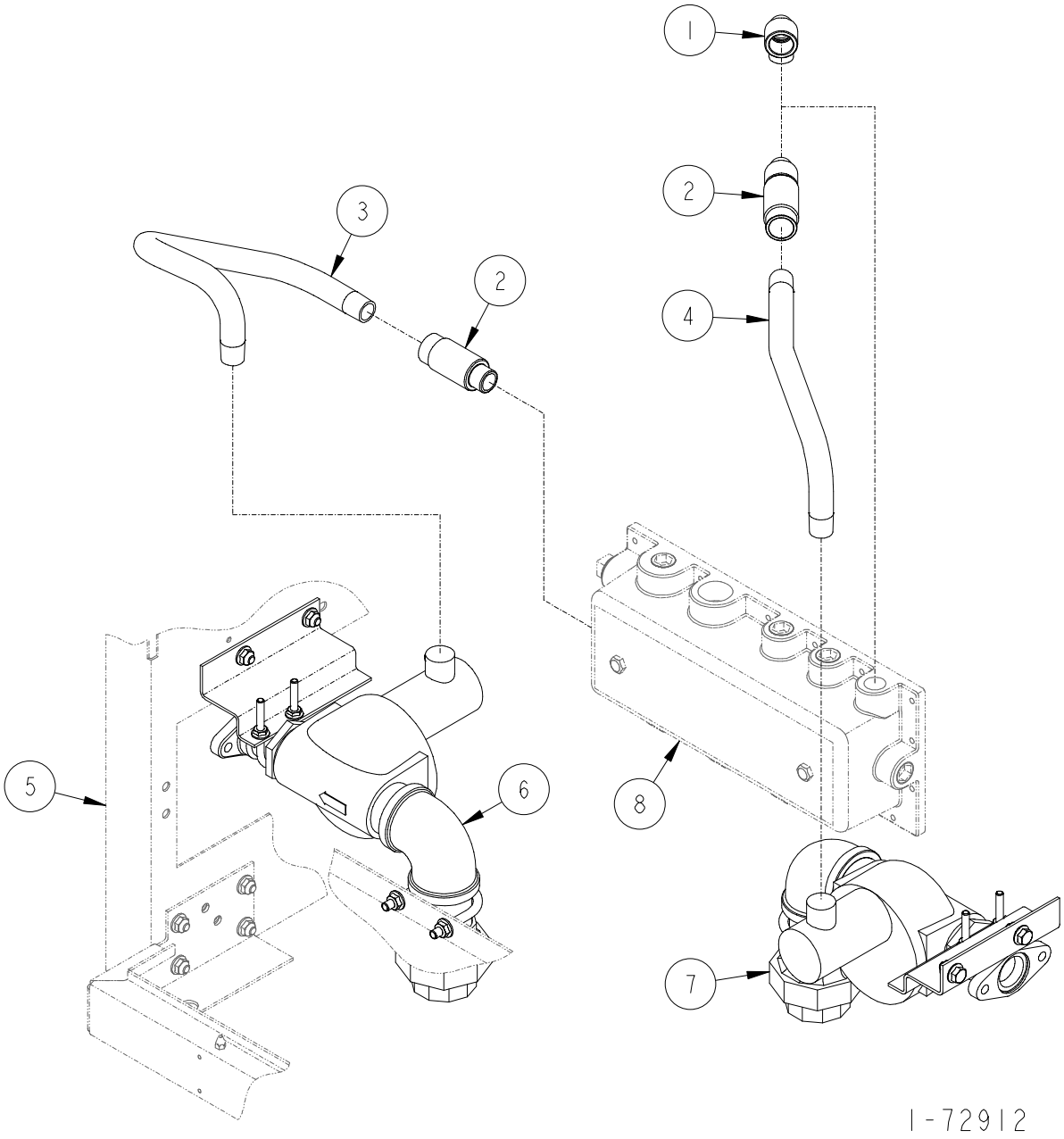

SATELLITE SYSTEM

H311C-RHVS, H312C-RHVSS

ITEM NO.	PART NO.	DESCRIPTION
1	1-128035	1/2" x 90° Conduit Street Elbow
2	1-218941	1/2" Expansion Union (Male/Female)
3	1-321428	Conduit
4	1-321430	Conduit
5	For parts call out of Chassis Assembly see 72779.	
6	For parts call out of Satellite Hydraulics see 72909. (H311C-RHVS, H312C-RHVSS side "A", H324C-RHVMS side "A")	
7	For parts call out of Satellite Hydraulics see 72909. (H312C-RHVSS side "B", H322C-RHVMS side "B", H324C-RHVMS side "B")	
8	For parts call out of Satellite Connection Box Assembly see 72918	

Reference for Tokheim internal use only:

321435 Chassis Assembly

1-72912

SATELLITE HYDRAULICS

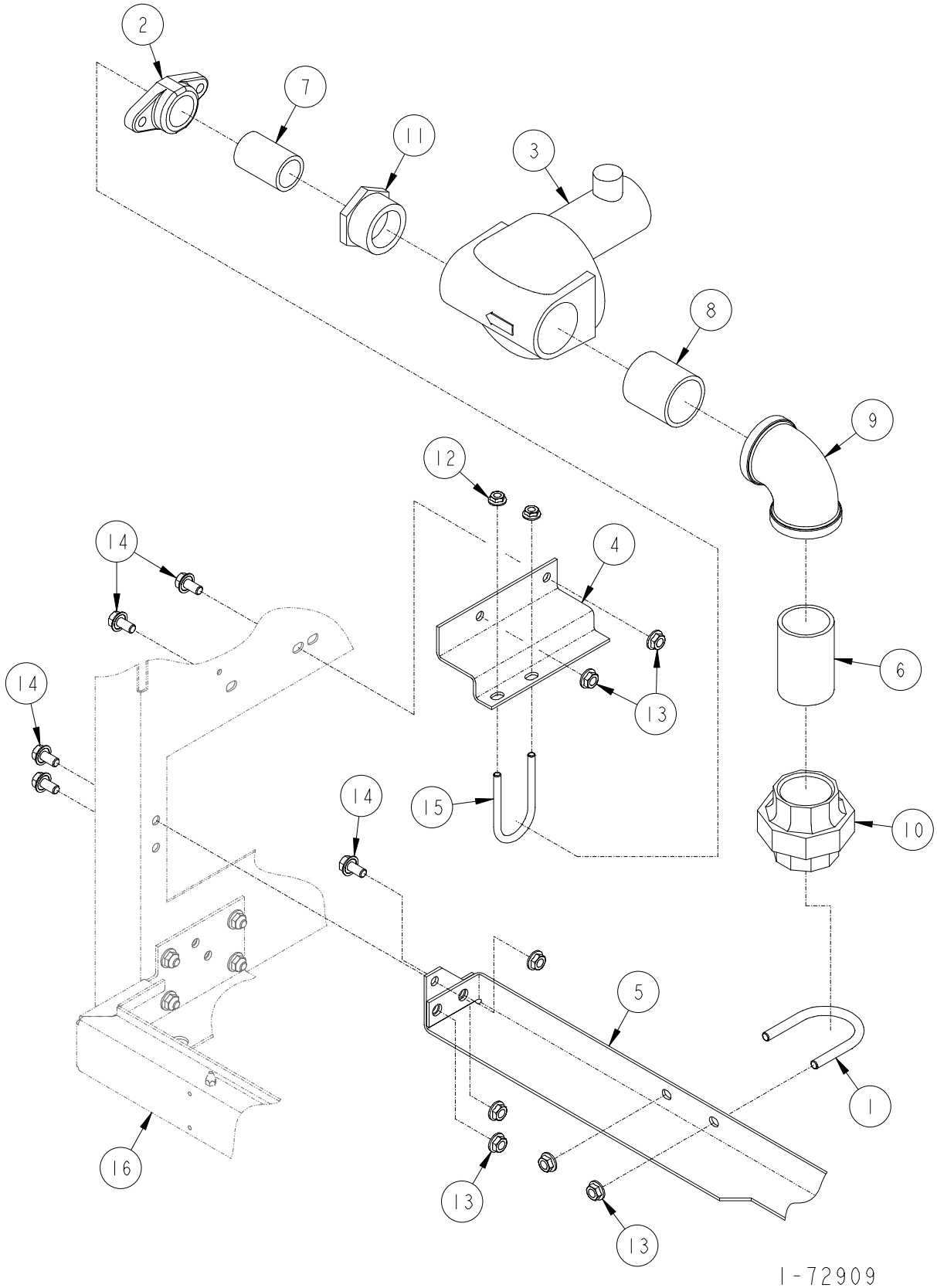

SATELLITE HYDRAULICS

ITEM NO.	PART NO.	DESCRIPTION
1	1-131336	5/16-18 "U" Bolt
2	5-220923	Meter Flange
3	Control Valve	
	1-319059	120 Volt
	2-319059	220 Volt
4	1-321403	Satellite Inlet Support Bracket
5	1-422962	Inlet Support Bracket
6	196-50510	1-1/2" x 2-13/16" Pipe
7	86-50560	1" x 2" Long Pipe Nipple
8	118-50560	1-1/2" x 2" Long Pipe Nipple
9	08-51700	1-1/2" 90° Elbow Banded
10	07-51780	1-1/2" Female Union
11	22-51850	Hexagon Bushing
12	01-54752	1/4-20 M-F Flange Whiz Lock Nut
13	02-54752	5/16-18 M-F Flange Whiz Lock Nut
14	35-55132	5/16-18 x 5/8" Long M-F Flange Whiz Lock Screw
15	03-55421	1/4-20 "U" Bolt
16	For parts call out of Chassis Assembly see 72779.	

Reference for Tokheim internal use only:

321425	Meter & Hydraulic Assembly
321435	Chassis Assembly

1-72909

3
B

TOTALIZER ASSEMBLY

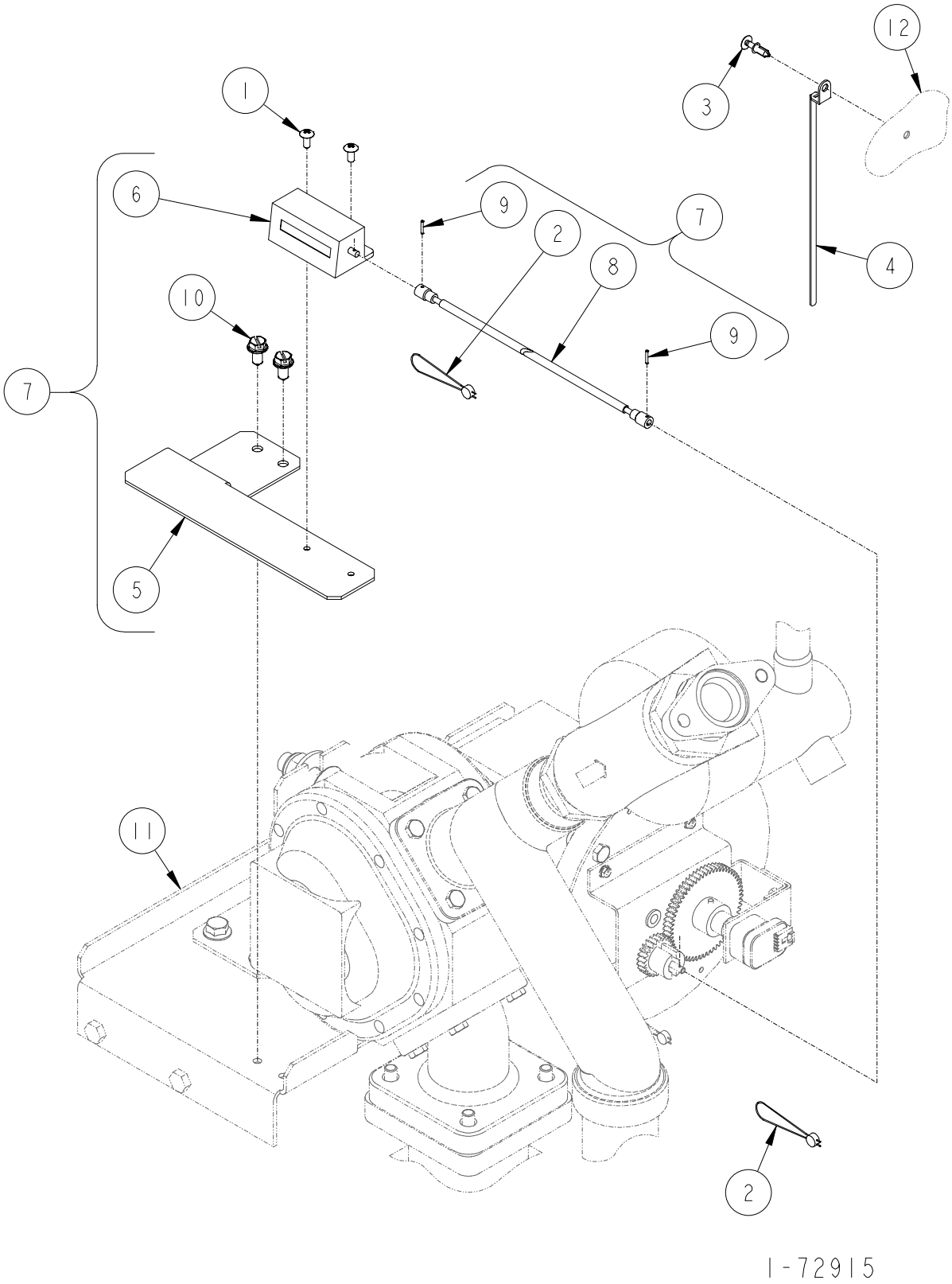

TOTALIZER ASSEMBLY

ITEM NO.	PART NO.	DESCRIPTION
1	1-126964	#8-32 x 3/8" Long Truss Head Thread Cutting Screw
2	1-131438	Seal Wire & Seal
3	1-228380	Blind Rivet
4	4-228918	Cable Clamp
5	1-321411	Totalizer Bracket
6	Totalizer	
	1-321444	Gallon
	2-321444	Liter
7	Totalizer Assembly (Includes items 1, 2, 5, 6, 8 & 9)	
	321439-1	Gallon
	321439-2	Liter
8	1-321459	Drive Cable
9	04-52901	Roll Pin
10	69-55392	1/4 x 1/2" Long Hex Washer Head Tapping Screw
11	For parts call out of see:	
	72913	Master/Master System
	72914	Master/Satellite System
12	For parts call out of Chassis Assembly see 72779.	
	Reference for Tokheim internal use only:	
	321425	Meter & Hydraulic Assembly
	321435	Chassis Assembly

1-72915

SECTION 4A

898 Discharge Hydraulics (Non Vapor)

Page Number

Discharge Assembly
- H311C, H312C, H322C, H324C, H311D, H312D, H322D & H324D 4A-2, 4A-3
- H311C-B3/5 & H322C-B3/5 ..... 4A-4, 4A-5
- H311C-RHVM & H312C-RHVMM 4A-6, 4A-7
- H311C-RHVS & H312C-RHVSS 4A-8, 4A-9
- H322C-RHVSS 4A-10, 4A-11
- H322C-RHVMS & H324C-RHVMS 4A-12, 4A-13
- H411C, H422C, H411D & H422D 4A-14, 4A-15
- H411C-B3/5 & H422C-B3/5 ..... 4A-16, 4A-17
- H411C-B3/5-MR & H422C-B3/5-MR 4A-18, 4A-19
- H412C, H424C, H412D & H424D 4A-20, 4A-21
- H412C-TR, H412D-TR, H424C-TR & H424D-TR 4A-22, 4A-23
- H412C-TL, H412D-TL, H424C-TL & H424D-TL 4A-24, 4A-25
- H412C-B3/4 & H424C-B3/4 ..... 4A-26, 4A-27
- H412C-B3/4TL & H424C-B3/4TL 4A-28, 4A-29
- H412C-B3/4TR & H424C-B3/4TR 4A-30, 4A-31

Page Number

Discharge Assembly (Continued)
- H413C, H426C, H413D & H426D 4A-32, 4A-33
- H413C-TR, H413D-TR, H426C-TR & H426D-TR 4A-34, 4A-35
- H413C-EB & H426C-EB 4A-36, 4A-37
- H413C-EBTR & H426C-EBTR 4A-38, 4A-39
- H414C, H428C, H414D & H428D 4A-40, 4A-41
- H414C-EB & H428C-EB 4A-42, 4A-43
- H724C 4A-44, 4A-45

Outlet Adapter Assembly
- H311C, H312C, H322C, H324C, H413C, H414C, H424C, H424C-B3/4 ..... 4A-46, 4A-47
- H426C, H426C-EB, H428C, H428C-EB, H311D, H312D, H322D, H324D, H413D, H414D, H424D, H426D & H428D 4A-48, 4A-49
- H311C-B3/5, H322C-B3/5, H411C, H422C, H422C-B3/5, H424C, H424C-B3/5, H426C-EB & H411D, H422D & H424D 4A-50, 4A-51
- H424C, H424C-B3/5 & H424D 4A-52, 4A-53

Fuel Tube Clamp Assembly 4A-54, 4A-55

DISCHARGE ASSEMBLY

H311C, H312C, H322C & H324C (NON VAPOR)
H311D, H312D, H322D & H324D (NON VAPOR)

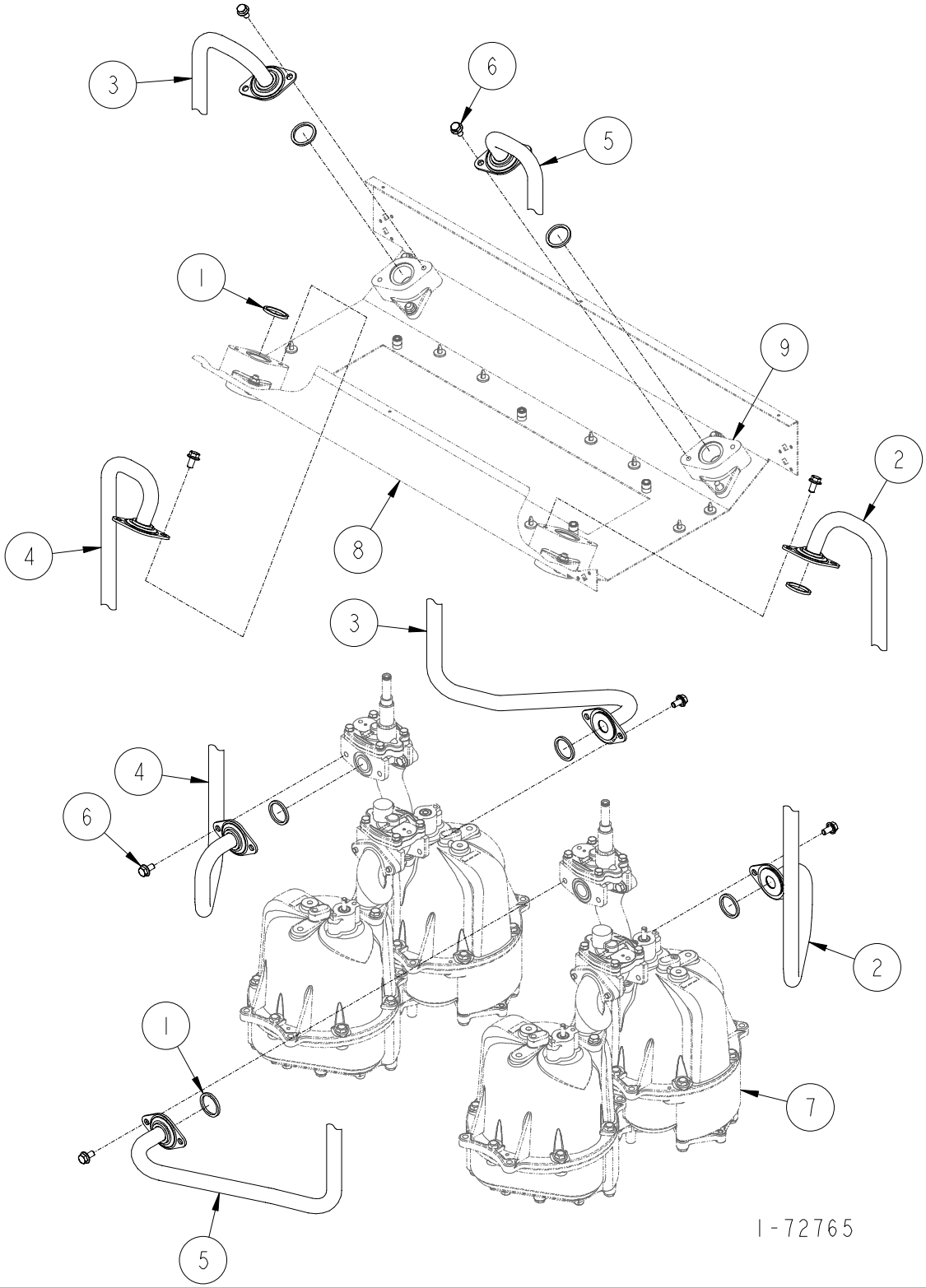

DISCHARGE ASSEMBLY

H311C, H312C, H322C & H324C (NON VAPOR)
H311D, H312D, H322D & H324D (NON VAPOR)

ITEM NO.	PART NO.	DESCRIPTION
1	13-313235	Gasket
2	1-422641	Fuel Discharge Tube (H311C, H312C, H322C, H324C Side A", H311D, H312D, H322D, H324D Side "A")
3	1-422641	Fuel Discharge Tube (H324C Side "B" & H324D Side "B")
4	1-422642	Fuel Discharge Tube (H311C, H312C, H322C, H324C Side "A", H311D, H312D, H322D, H324D Side "A")
5	1-422642	Fuel Discharge Tube (H324C Side "B" & H324D Side "B")
6	35-55132	5/16-18 x 5/8" Long M-F Flange Whiz Lock Screw
7	For parts call out of Meter & Hydraulics Assembly see 72726.	
8	For parts call out of Chassis Assembly see 72779.	
9	For parts call out of Outlet Adaptor Assembly see 72763.	

Reference for Tokheim internal use only:

321212	Fuel Tube Hydraulic Assembly
422740	Raceway Assembly

1-72765

4
A

DISCHARGE ASSEMBLY

H311C-B3/5 & H322C-B3/5 (NON VAPOR)

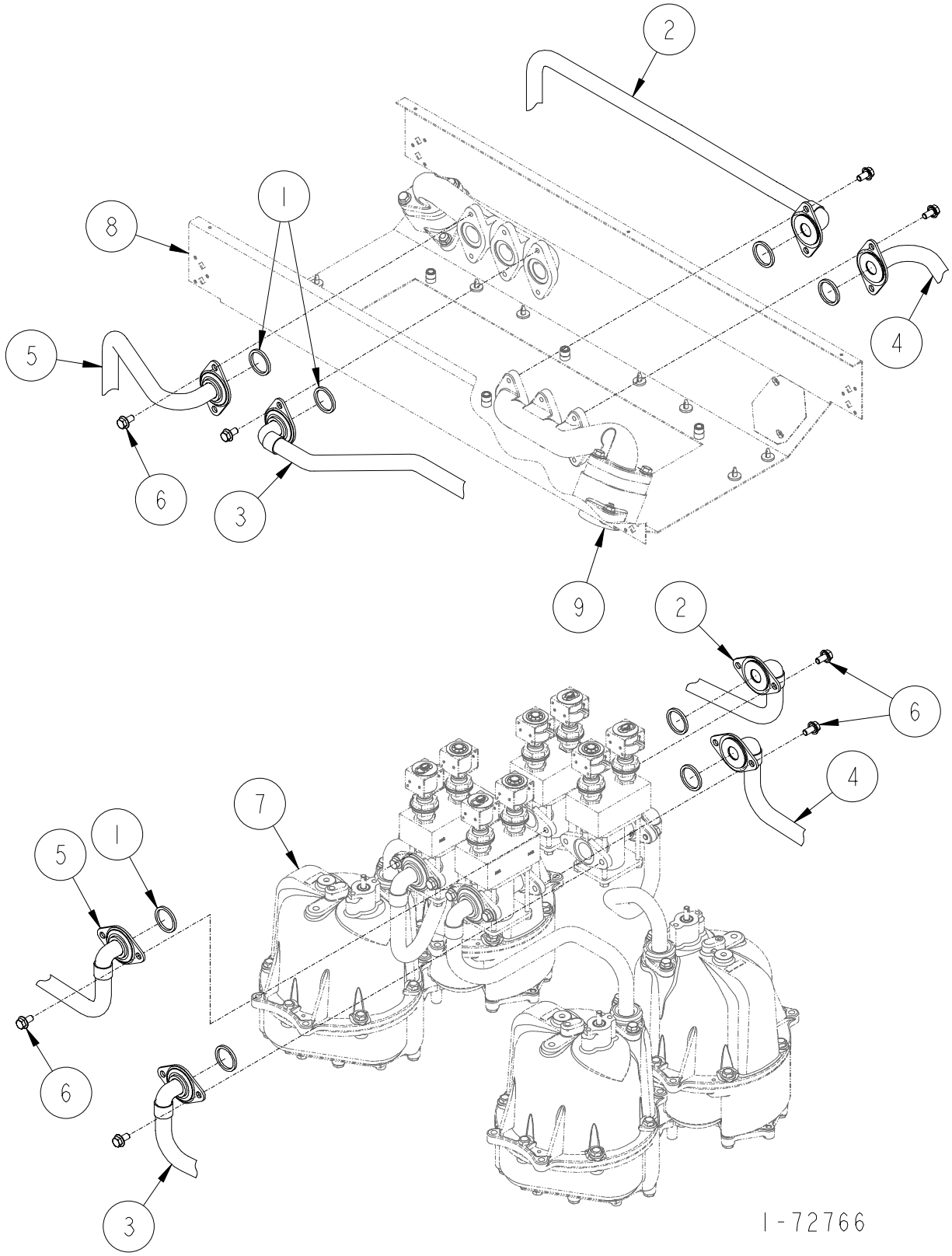

DISCHARGE ASSEMBLY

H311C-B3/5, H322C-B3/5 (NON VAPOR)

ITEM NO.	PART NO.	DESCRIPTION
1	13-313235	Gasket
2	1-422696	Fuel Discharge Tube (H311C-B3/5 & H322C-B3/5 Side "A")
3	1-422696	Fuel Discharge Tube (H322C-B3/5 Side "B")
4	1-422711	Fuel Discharge Tube (H311C-B3/5 & H322C-B3/5 Side "A")
5	1-422711	Fuel Discharge Tube (H322C-B3/5 Side "B")
6	35-55132	5/16-18 x 5/8" Long M-F Flange Whiz Lock Screw
7	For parts call out of Meter & Hydraulics Assembly see 72726.	
8	For parts call out of Chassis Assembly see 72779.	
9	For parts call out of Outlet Adaptor Assembly see 72761.	

Reference for Tokheim internal use only:

321212	Fuel Tube Hydraulic Assembly
422740	Raceway Assembly

1-72766

4
A

DISCHARGE ASSEMBLY

H311C-RHVM & H312C-RHVMM

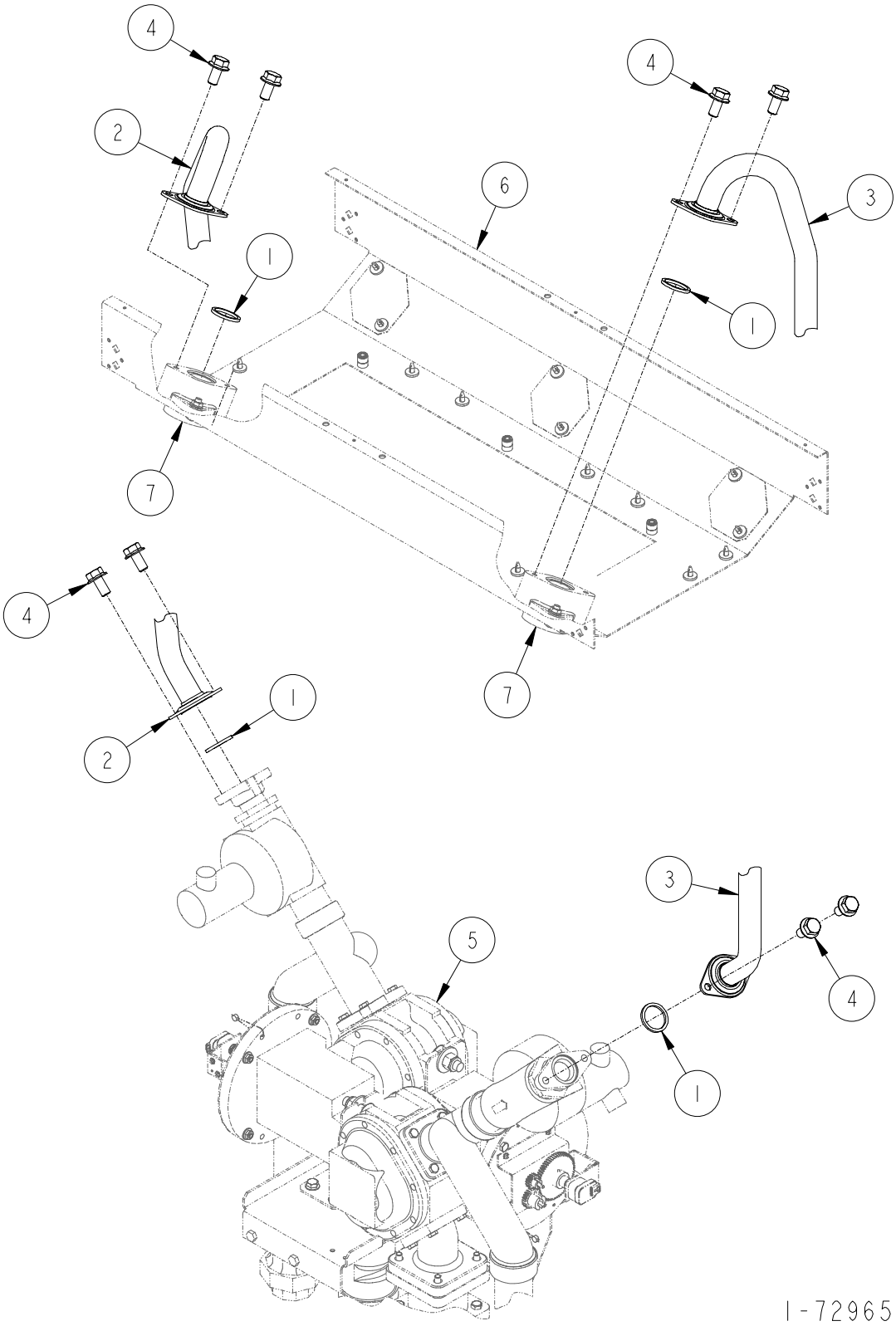

DISCHARGE ASSEMBLY

H311C-RHVM & H312C-RHVMM

ITEM NO.	PART NO.	DESCRIPTION
1	13-313235	Gasket
2	1-422967	Fuel Discharge Tube (H311C-RHVM & H312C-RHVMM)
3	1-422968	Fuel Discharge Tube (H312C-RHVMM)
4	35-55132	5/16-18 x 5/8" Long M-F Flange Whiz Lock Screw
5	For parts call out of Master/Master System see 72913.	
6	For parts call out of Chassis Assembly see 72779.	
7	For parts call out of Outlet Adaptor Assembly see 72763.	

Reference for Tokheim internal use only:

321436	Fuel Tube Hydraulic Assembly
422740	Raceway Assembly

1-72965

4
A

DISCHARGE ASSEMBLY

H311C-RHVS & H312C-RHVSS

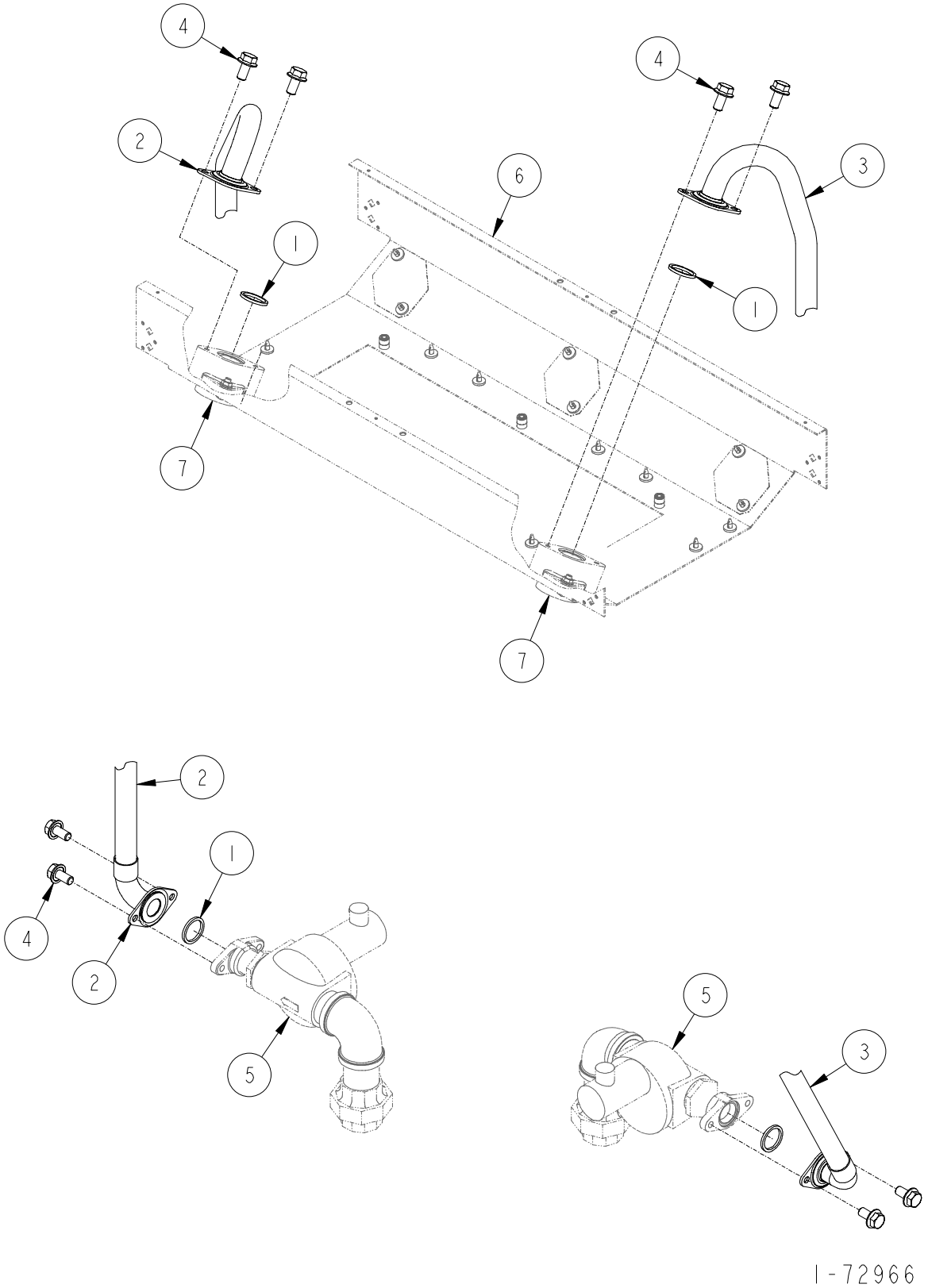

DISCHARGE ASSEMBLY

H311C-RHVS & H312C-RHVSS

ITEM NO.	PART NO.	DESCRIPTION
1	13-313235	Gasket
2	1-422969	Fuel Discharge Tube (H311C-RHVS & H312C-RHVSS)
3	1-422970	Fuel Discharge Tube (H312C-RHVSS)
4	35-55132	5/16-18 x 5/8" Long M-F Flange Whiz Lock Screw
5	For parts call out of Satellite System see 72912.	
6	For parts call out of Chassis Assembly see 72779.	
7	For parts call out of Outlet Adaptor Assembly see 72763.	

Reference for Tokheim internal use only:

321436	Fuel Tube Hydraulic Assembly
422740	Raceway Assembly

1-72966

4
A

DISCHARGE ASSEMBLY

H322C-RHVSS

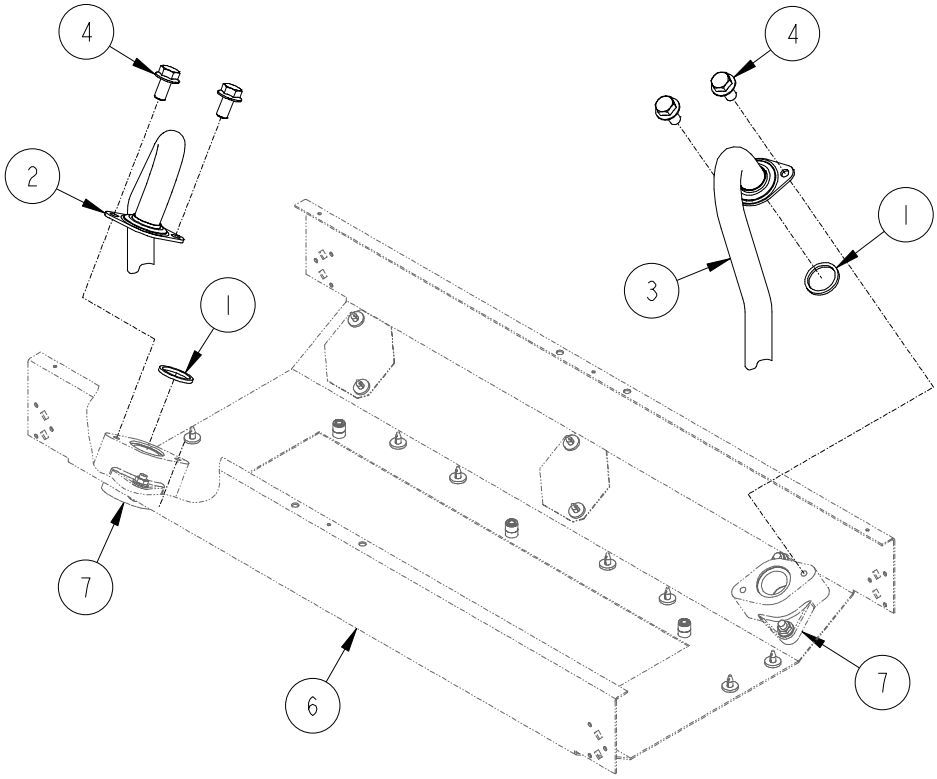

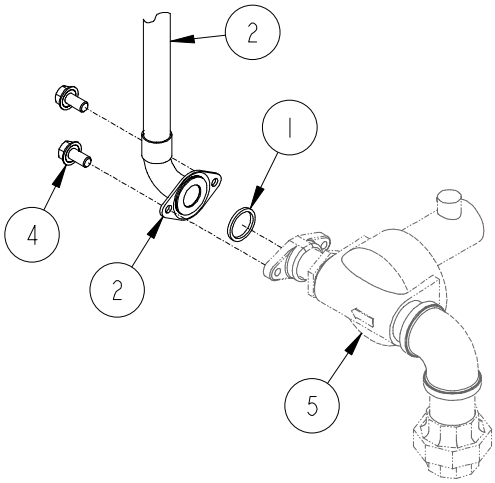

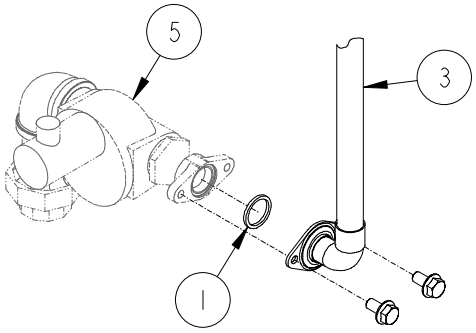

I-72967

DISCHARGE ASSEMBLY

H322C-RHVSS

ITEM NO.	PART NO.	DESCRIPTION
1	13-313235	Gasket
2	1-422969	Fuel Discharge Tube
3	1-422969	Fuel Discharge Tube
4	35-55132	5/16-18 x 5/8" Long M-F Flange Whiz Lock Screw
5	For parts call out of Satellite System see 72912.	
6	For parts call out of Chassis Assembly see 72779.	
7	For parts call out of Outlet Adaptor Assembly see 72763.	

Reference for Tokheim internal use only:

321436	Fuel Tube Hydraulic Assembly
422740	Raceway Assembly

1-72967

4
A

DISCHARGE ASSEMBLY

H322C-RHMS & H324C-RHVMS

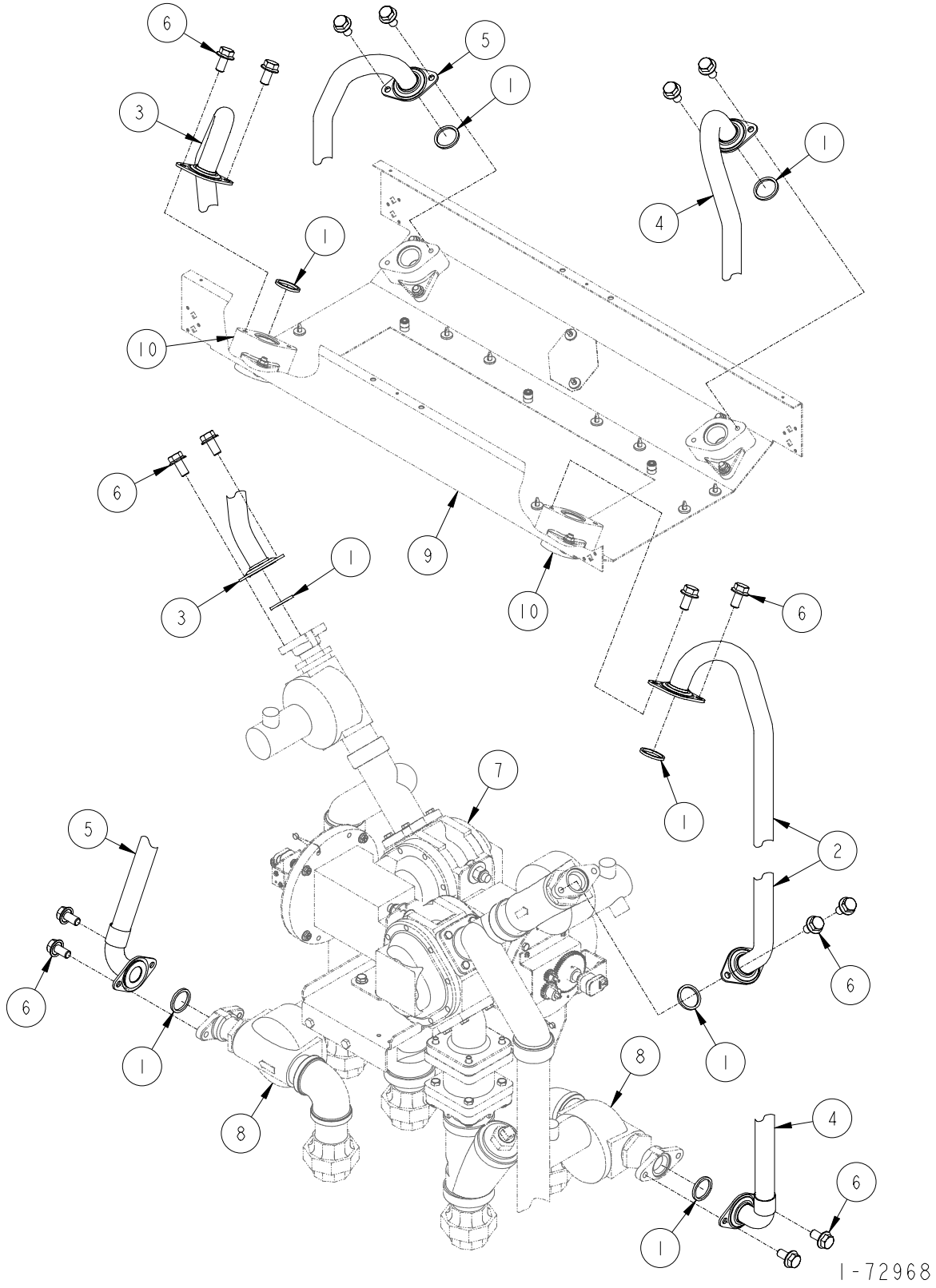

DISCHARGE ASSEMBLY

H322C-RHVMS & H324C-RHVMS

ITEM NO.	PART NO.	DESCRIPTION
1	13-313235	Gasket
2	1-422967	Fuel Discharge Tube
3	1-422968	Fuel Discharge Tube
4	1-422969	Fuel Discharge Tube
5	1-422970	Fuel Discharge Tube
6	35-55132	5/16-18 x 5/8" Long M-F Flange Whiz Lock Screw
7	For parts call out of Master/Master System see 72912.	
8	For parts call out of Satellite System see 72913.	
9	For parts call out of Chassis Assembly see 72779.	
10	For parts call out of Outlet Adaptor Assembly see 72763.	

Reference for Tokheim internal use only:

321436	Fuel Tube Hydraulic Assembly
422740	Raceway Assembly

1-72968

4
A

DISCHARGE ASSEMBLY

H411C, H422C, H411D & H422D (NON VAPOR)

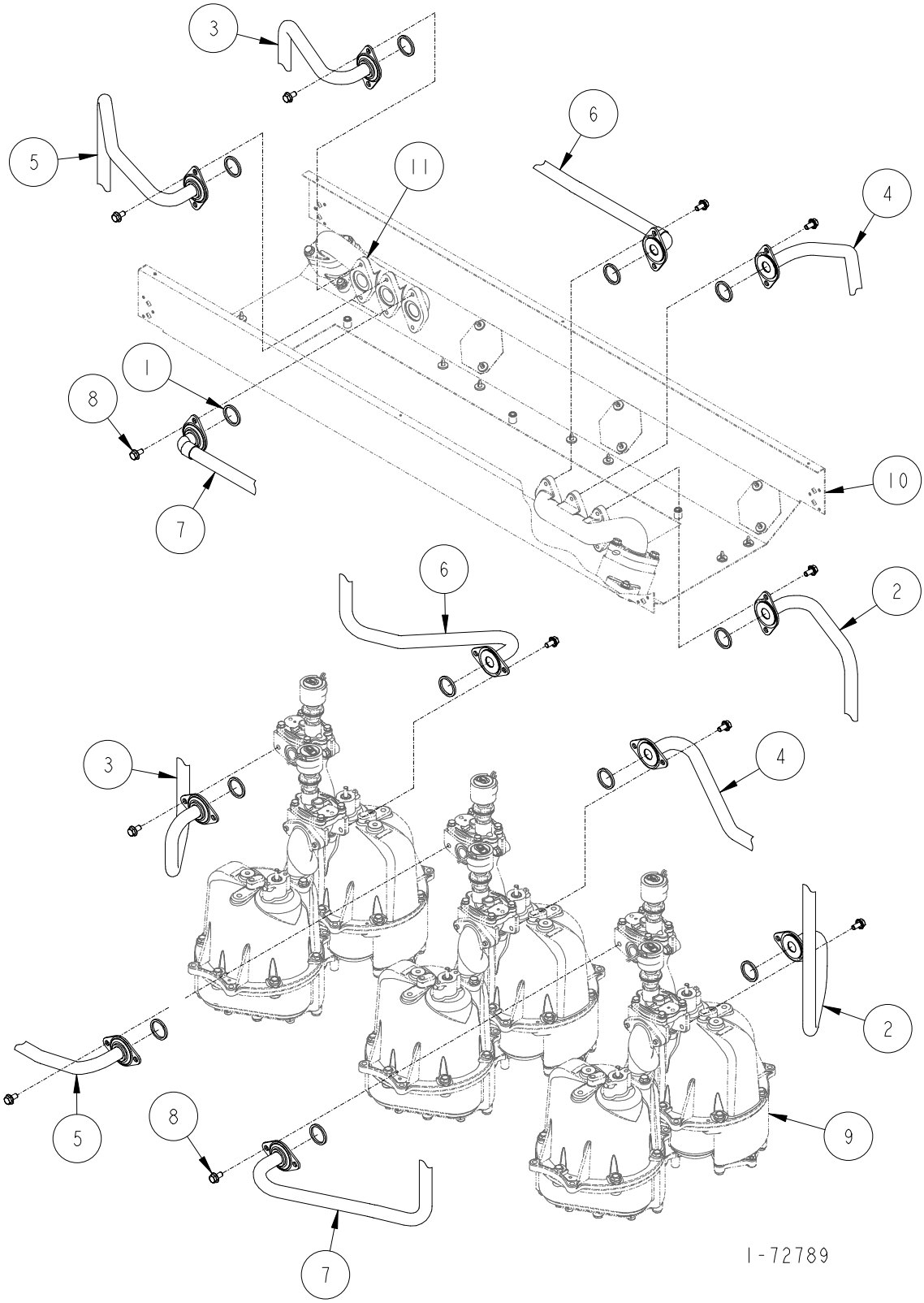

DISCHARGE ASSEMBLY

H411C, H422C, H411D & H422D (NON VAPOR)

ITEM NO.	PART NO.	DESCRIPTION
1	13-313235	Gasket
2	1-422729	Fuel Discharge Tube (H411C, H422C Side "A", H411D, H422D Side "A")
3	1-422729	Fuel Discharge Tube (H422C Side "B" & H422D Side "B")
4	1-422730	Fuel Discharge Tube (H411C, H422C Side "A", H411D, H422D Side "A")
5	1-422730	Fuel Discharge Tube (H422C Side B & H422D Side "B")
6	1-422731	Fuel Discharge Tube (H411C, H422C Side "A", H411D, H422D Side "A")
7	1-422731	Fuel Discharge Tube (H422C Side "B" & H422D Side "B")
8	35-55132	5/16-18 x 5/8" Long M-F Flange Whiz Lock Screw
9	For parts call out of Meter & Hydraulics Assembly see 72726.	
10	For parts call out of Chassis Assembly see 72724.	
11	For parts call out of Outlet Adapter Assembly see 72761.	

Reference for Tokheim internal use only:

321170	Fuel Tube Hydraulic Assembly
422624	Raceway Assembly

1-72789

4
A

DISCHARGE ASSEMBLY

H411C-B3/5 & H422C-B3/5 (NON VAPOR)

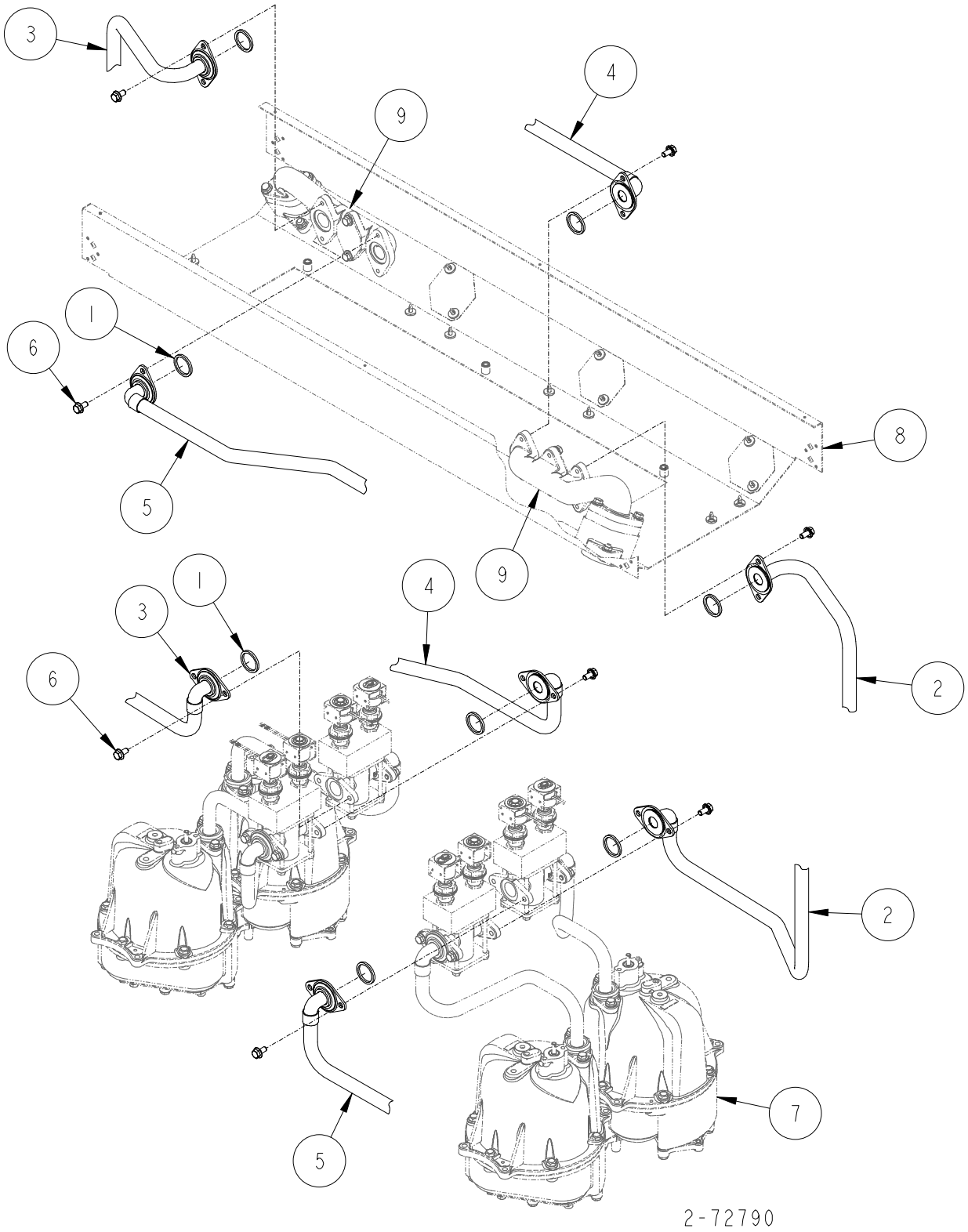

DISCHARGE ASSEMBLY

H411C-B3/5 & H422C-B3/5 (NON VAPOR)

ITEM NO.	PART NO.	DESCRIPTION
1	13-313235	Gasket
2	1-422732	Fuel Discharge Tube (H411C-B3/5 & H422C-B3/5 Side A)
3	1-422732	Fuel Discharge Tube (H422C-B3/5 Side B)
4	1-422733	Fuel Discharge Tube (H411C-B3/5 & H422C-B3/5 Side A)
5	1-422733	Fuel Discharge Tube (H422C-B3/5 Side B)
6	35-55132	5/16-18 x 5/8" Long M-F Flange Whiz Lock Screw
7	For parts call out of Meter & Hydraulics Assembly see 72728.	
8	For parts call out of Chassis Assembly see 72724.	
9	For parts call out of Outlet Adapter Assembly see 72761.	

Reference for Tokheim internal use only:

321170	Fuel Tube Hydraulic Assembly
422624	Raceway Assembly

2-72790

4
A

DISCHARGE ASSEMBLY

H411C-B3/5MR & H422C-B3/5MR (NON VAPOR)

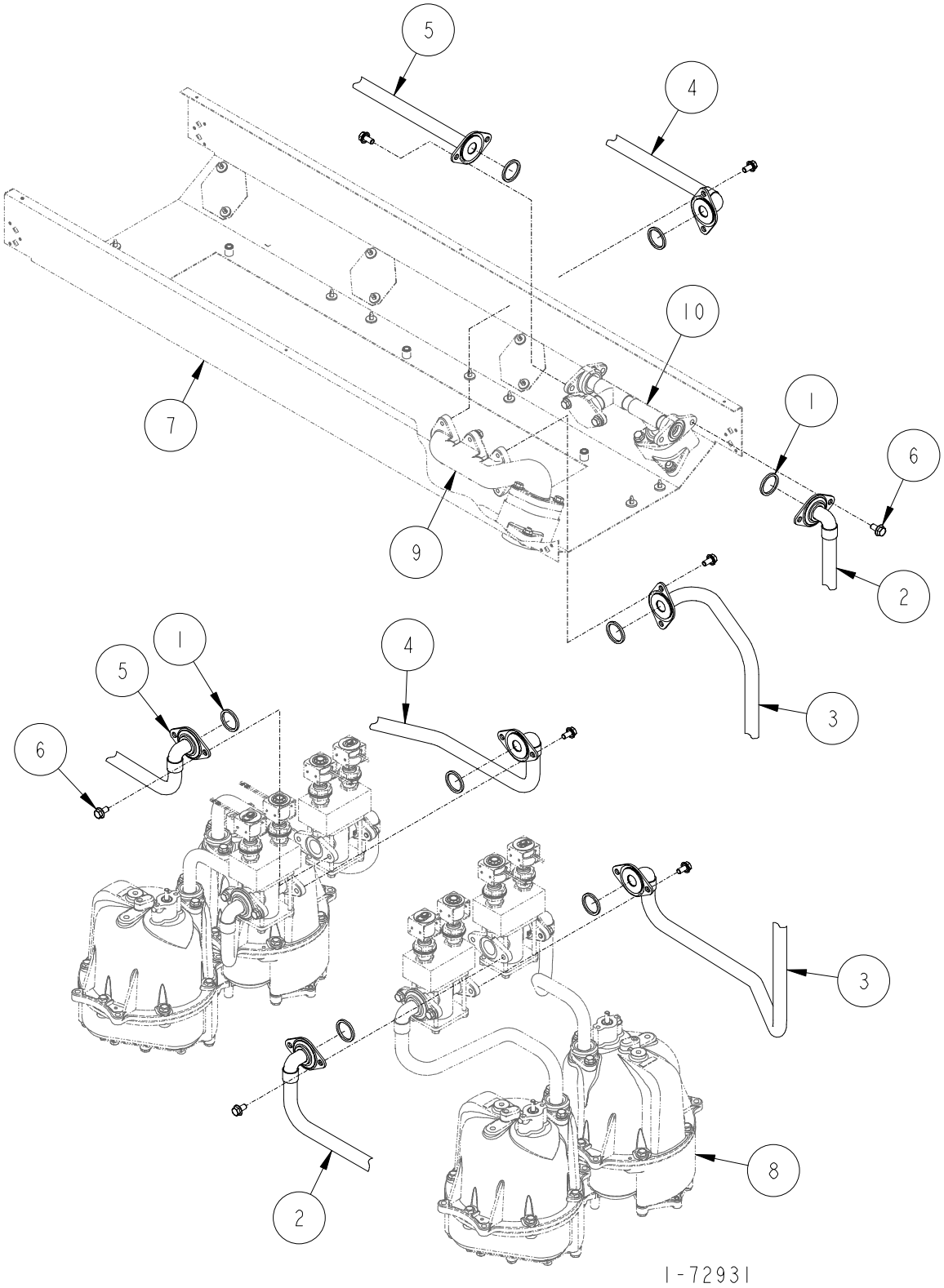

DISCHARGE ASSEMBLY

H411C-B3/5MR & H422C-B3/5MR (NON VAPOR)

ITEM NO.	PART NO.	DESCRIPTION
1	13-313235	Gasket
2	1-422732	Fuel Discharge Tube
3	1-422732	Fuel Discharge Tube
4	1-422733	Fuel Discharge Tube
5	1-422732	Fuel Discharge Tube
6	35-55132	5/16-18 x 5/8" Long M-F Flange Whiz Lock Screw
7	For parts call out of Chassis Assembly see 72724.	
8	For parts call out of Meter & Hydraulics Assembly see 72728.	
9	For parts call out of Outlet Adapter Assembly see 72761.	
10	For parts call out of Outlet Adapter Assembly see 72818.	

Reference for Tokheim internal use only:

321170	Fuel Tube Hydraulic Assembly
422624	Raceway Assembly

1-72931

4
A

DISCHARGE ASSEMBLY

H412C, H424C, H412D & H424D (NON VAPOR)

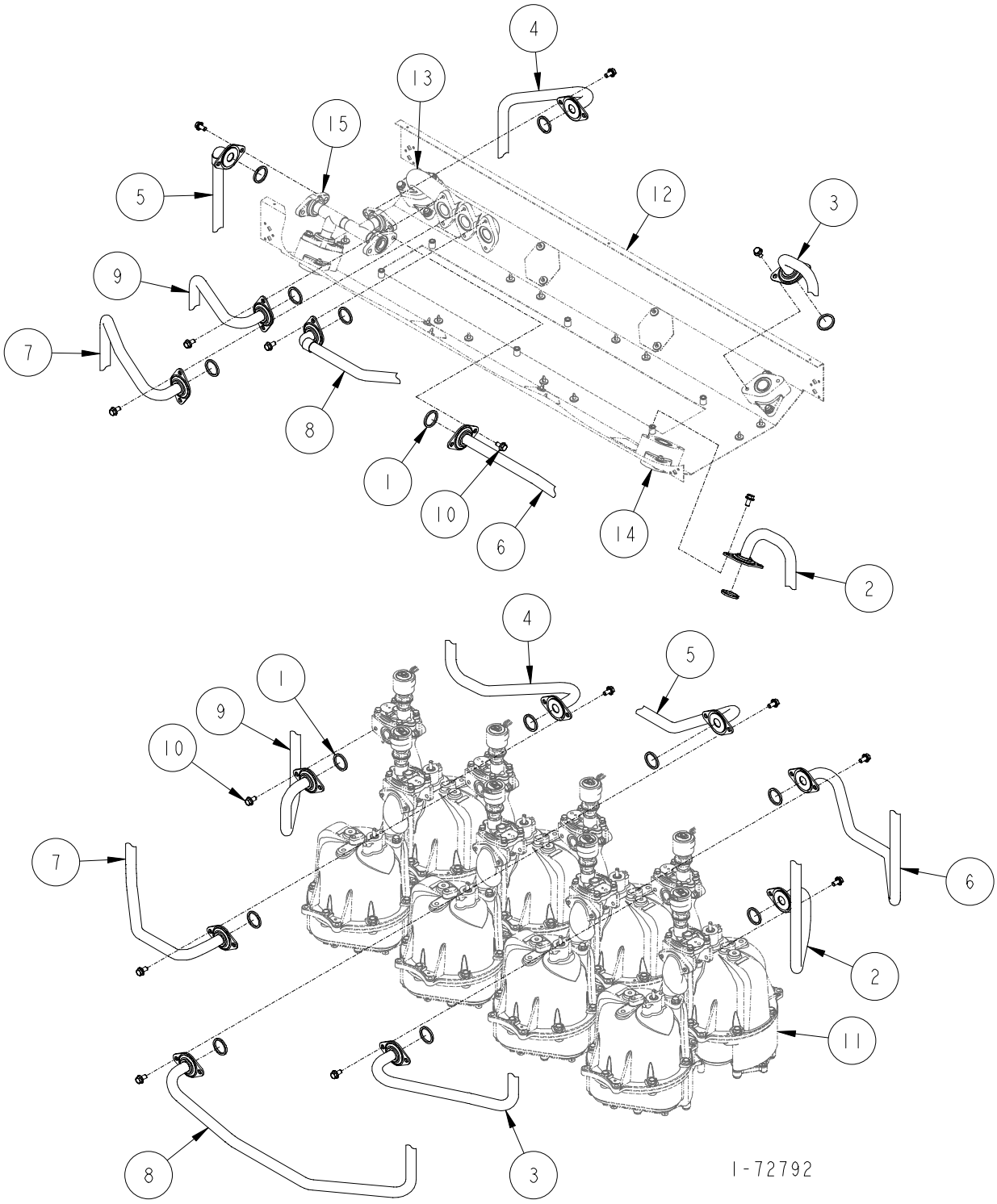

DISCHARGE ASSEMBLY

H412C, H424C, H412D & H424D (NON VAPOR)

ITEM NO.	PART NO.	DESCRIPTION
1	13-313235	Gasket
2	1-422641	Fuel Discharge Tube (H412C, H424C Side "A", H412D, H424D Side "A")
3	1-422642	Fuel Discharge Tube (H424C Side "B" & H424D Side "B")
4	1-422697	Fuel Discharge Tube (H412C, H424C Side "A", H412D, H424D Side "A")
5	1-422698	Fuel Discharge Tube (H424C Side "B" & H424D Side "B")
6	1-422699	Fuel Discharge Tube (H412C, H424C Side "A", H412D, H424D Side "A")
7	1-422700	Fuel Discharge Tube (H424C Side "B" & H424D Side "B")
8	1-422701	Fuel Discharge Tube (H412C, H424C Side "A", H412D, H424D Side "A")
9	1-422729	Fuel Discharge Tube (H424C Side "B" & H424D Side "B")
10	35-55132	5/16-18 x 5/8" Long M-F Flange Whiz Lock Screw
11	For parts call out of Meter & Hydraulics Assembly see 72726.	
12	For parts call out of Chassis Assembly see 72724.	
13	For parts call out of Outlet Adapter Assembly see 72761.	
14	For parts call out of Outlet Adapter Assembly see 72763.	
15	For parts call out of Outlet Adapter Assembly see 72818.	

Reference for Tokheim internal use only:

321170	Fuel Tube Hydraulic Assembly
422624	Raceway Assembly

1-72792

4
A

DISCHARGE ASSEMBLY

H412C-TR,H412D-TR, H424C-TR & H424D-TR (NON VAPOR)

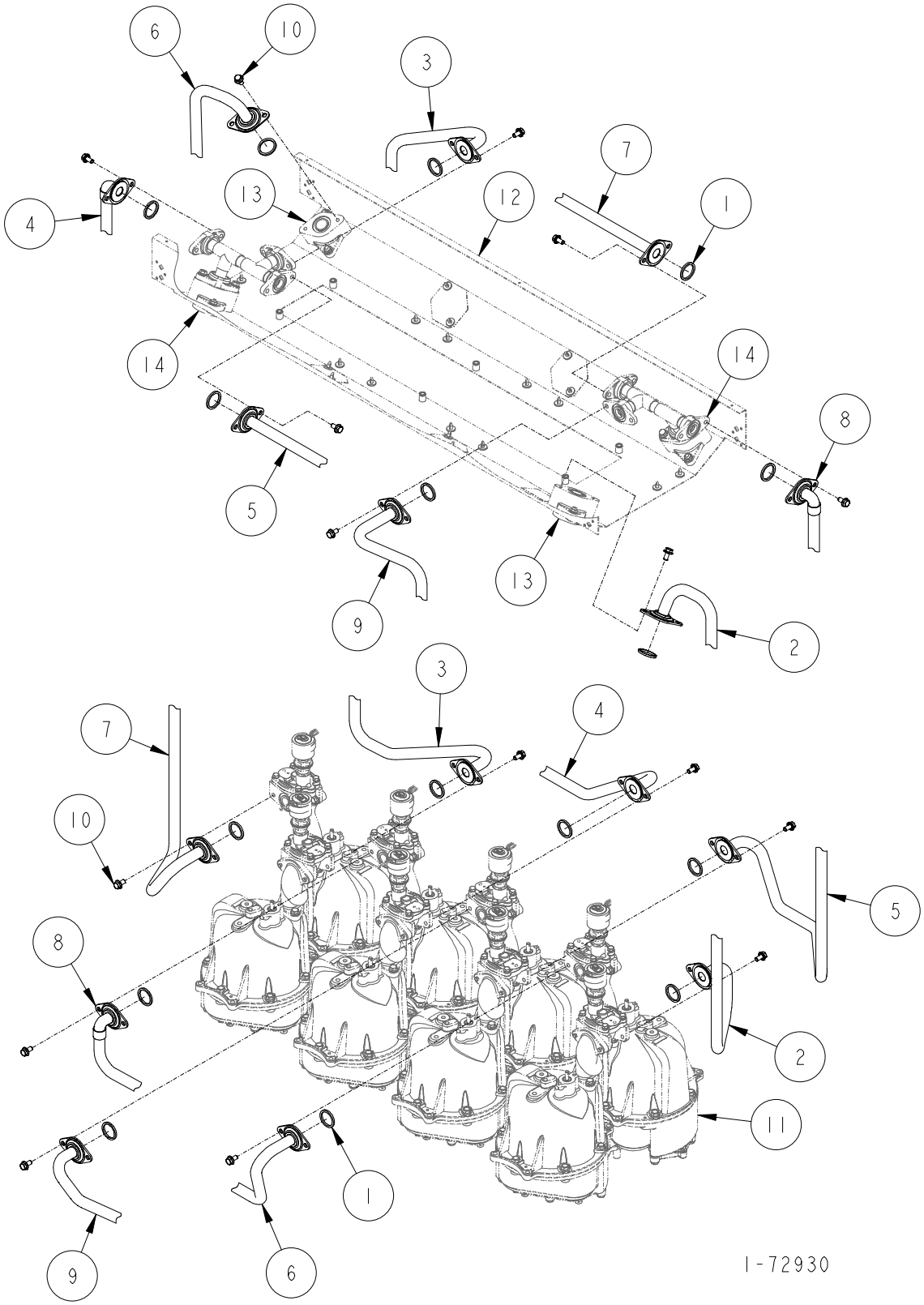

DISCHARGE ASSEMBLY

H412C-TR, H412D-TR, H424C-TR & H424D-TR (NON VAPOR)

ITEM NO.	PART NO.	DESCRIPTION
1	13-313235	Gasket
2	1-422641	Fuel Discharge Tube (H412C-TR, H424C-TR Side "A", H412D-TR, H424D-TR Side "A")
3	1-422697	Fuel Discharge Tube (H412C-TR, H424C-TR Side "A", H412D-TR, H424D-TR Side "A")
4	1-422698	Fuel Discharge Tube (H412C-TR, H424C-TR Side "A", H412D-TR, H424D-TR Side "A")
5	1-422699	Fuel Discharge Tube (H412C-TR, H424C-TR Side "A", H412D-TR, H424D-TR Side "A")
6	1-422975	Fuel Discharge Tube (H424C-TR Side "B" & H424D-TR Side "B")
7	1-422976	Fuel Discharge Tube (H424C-TR Side "B" & H424D-TR Side "B")
8	1-422977	Fuel Discharge Tube (H424C-TR Side "B" & H424D-TR Side "B")
9	1-422978	Fuel Discharge Tube (H424C-TR Side "B" & H424D-TR Side "B")
10	35-55132	5/16-18 x 5/8" Long M-F Flange Whiz Lock Screw
11	For parts call out of Meter & Hydraulics Assembly see 72726.	
12	For parts call out of Chassis Assembly see 72724.	
13	For parts call out of Outlet Adapter Assembly see 72763.	
14	For parts call out of Outlet Adapter Assembly see 72818.	

Reference for Tokheim internal use only:

321170	Fuel Tube Hydraulic Assembly
422624	Raceway Assembly

1-72930

4
A

DISCHARGE ASSEMBLY

H412C-TL,H412D-TL, H424C-TL & H424D-TL (NON VAPOR)

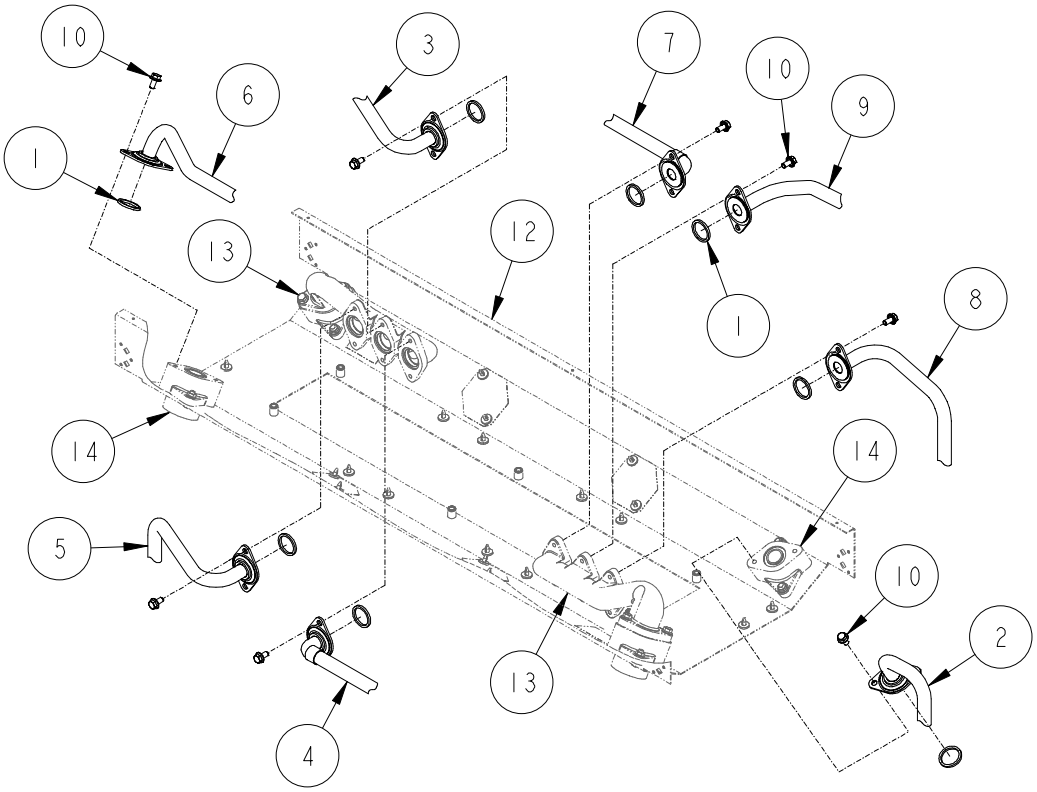

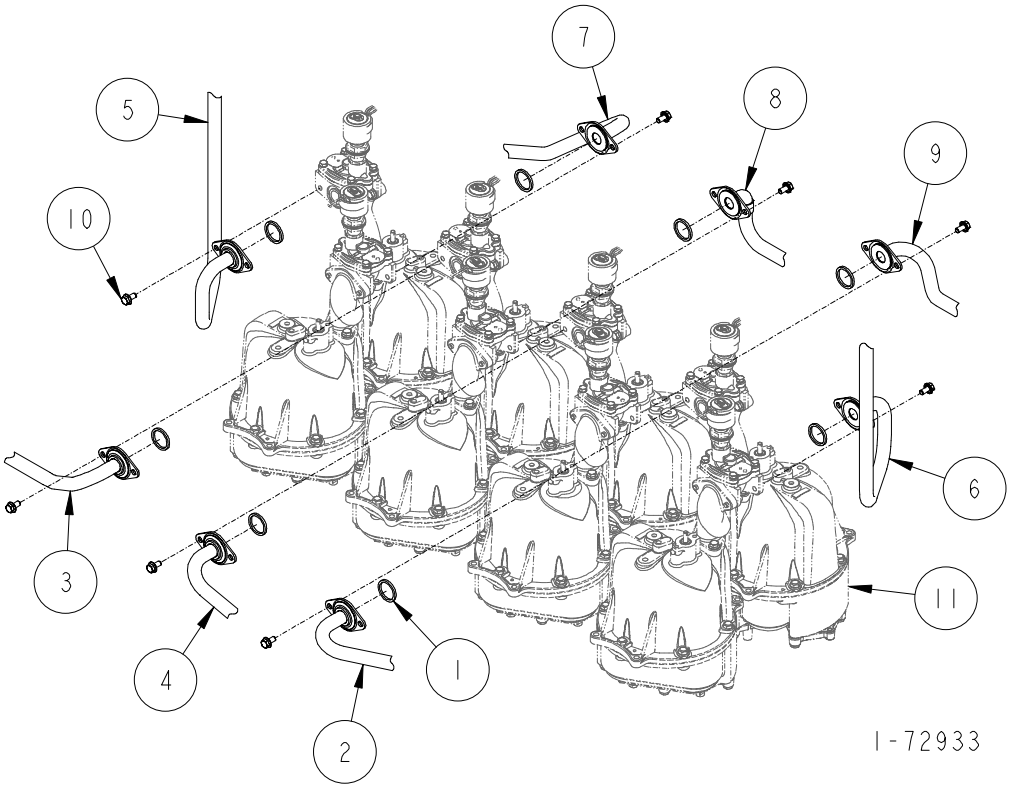

DISCHARGE ASSEMBLY

H412C-TL, H412D-TL, H424C-TL & H424D-TL (NON VAPOR)

ITEM NO.	PART NO.	DESCRIPTION
1	13-313235	Gasket
2	1-422642	Fuel Discharge Tube (H424C-TR Side "B" & H424D-TR Side "B")
3	1-422700	Fuel Discharge Tube (H424C-TR Side "B" & H424D-TR Side "B")
4	1-422701	Fuel Discharge Tube (H424C-TR Side "B" & H424D-TR Side "B")
5	1-422729	Fuel Discharge Tube (H424C-TR Side "B" & H424D-TR Side "B")
6	1-422832	Fuel Discharge Tube (H412C-TR, H424C-TR Side "A", H412D-TR, H424D-TR Side "A")
7	1-422854	Fuel Discharge Tube (H412C-TR, H424C-TR Side "A", H412D-TR, H424D-TR Side "A")
8	1-422855	Fuel Discharge Tube (H412C-TR, H424C-TR Side "A", H412D-TR, H424D-TR Side "A")
9	1-422856	Fuel Discharge Tube (H412C-TR, H424C-TR Side "A", H412D-TR, H424D-TR Side "A")
10	35-55132	5/16-18 x 5/8" Long M-F Flange Whiz Lock Screw
11	For parts call out of Meter & Hydraulics Assembly see 72726.	
12	For parts call out of Chassis Assembly see 72724.	
13	For parts call out of Outlet Adapter Assembly see 72761.	
14	For parts call out of Outlet Adapter Assembly see 72763.	

Reference for Tokheim internal use only:

321170	Fuel Tube Hydraulic Assembly
422624	Raceway Assembly

1-72933

4
A

DISCHARGE ASSEMBLY

H412C-B3/4 & H424C-B3/4 (NON VAPOR)

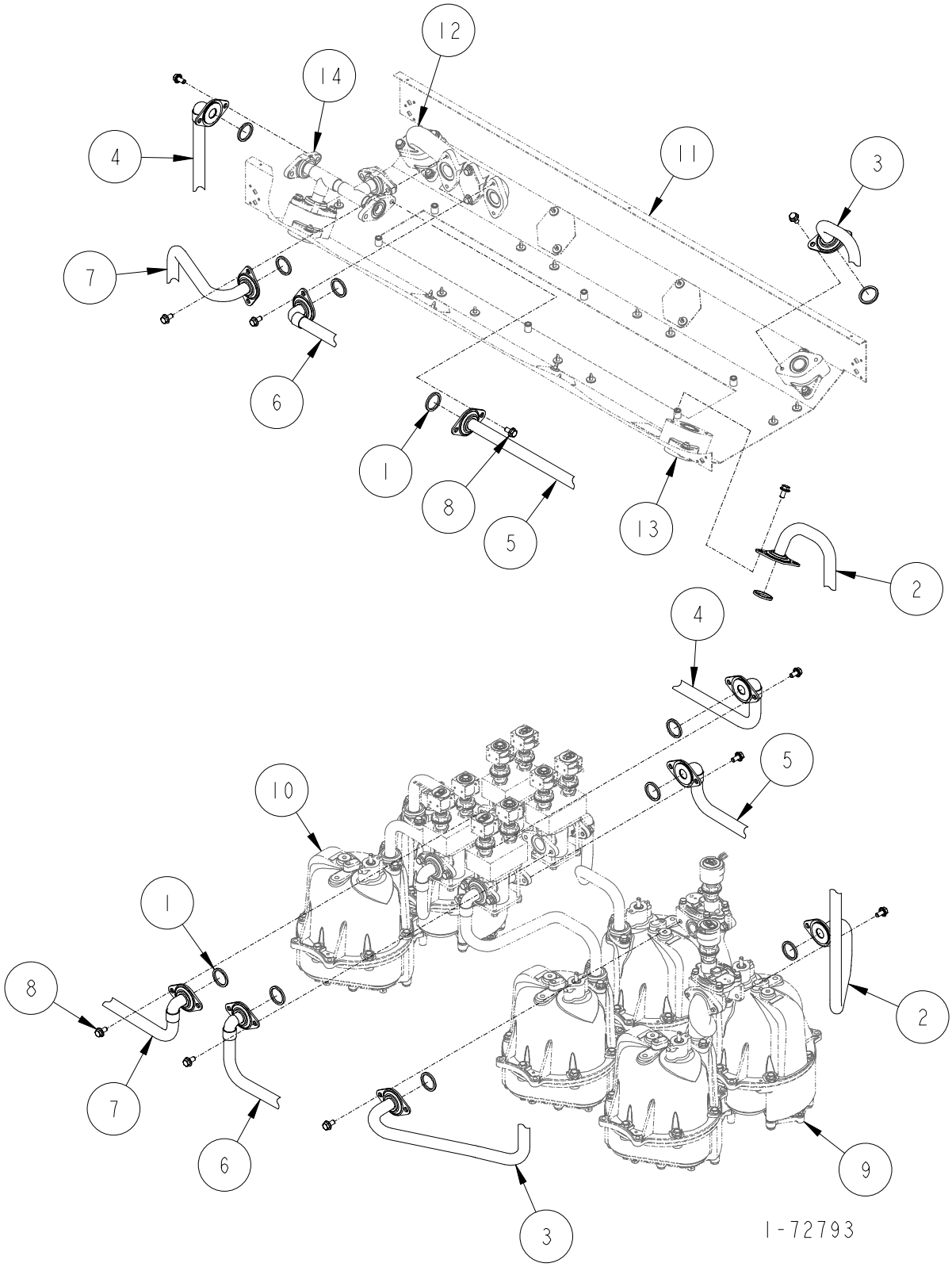

DISCHARGE ASSEMBLY

H412C-B3/4 & H424C-B3/4 (NON VAPOR)

ITEM NO.	PART NO.	DESCRIPTION
1	13-313235	Gasket
2	1-422641	Fuel Discharge Tube (H412C-B3/4 Side "A", H424C-B3/4 Side "A")
3	1-422642	Fuel Discharge Tube (H424C-B3/4 Side "B")
4	1-422702	Fuel Discharge Tube (H412C-B3/4 Side "A", H424C-B3/4 Side "A")
5	1-422703	Fuel Discharge Tube (H412C-B3/4 Side "A", H424C-B3/4 Side "A")
6	1-422704	Fuel Discharge Tube (H424C-B3/4 Side "B")
7	1-422732	Fuel Discharge Tube (H424C-B3/4 Side "B")
8	35-55132	5/16-18 x 5/8" Long M-F Flange Whiz Lock Screw
9	For parts call out of Meter & Hydraulics Assembly see 72726.	
10	For parts call out of Meter & Hydraulics Assembly see 72728.	
11	For parts call out of Chassis Assembly see 72724.	
12	For parts call out of Outlet Adapter Assembly see 72761.	
13	For parts call out of Outlet Adapter Assembly see 72763.	
14	For parts call out of Outlet Adapter Assembly see 72818.	

Reference for Tokheim internal use only:

321170	Fuel Tube Hydraulic Assembly
422624	Raceway Assembly

1-72793

4
A

DISCHARGE ASSEMBLY

H412C-B3/4TL & H424C-B3/4TL (NON VAPOR)

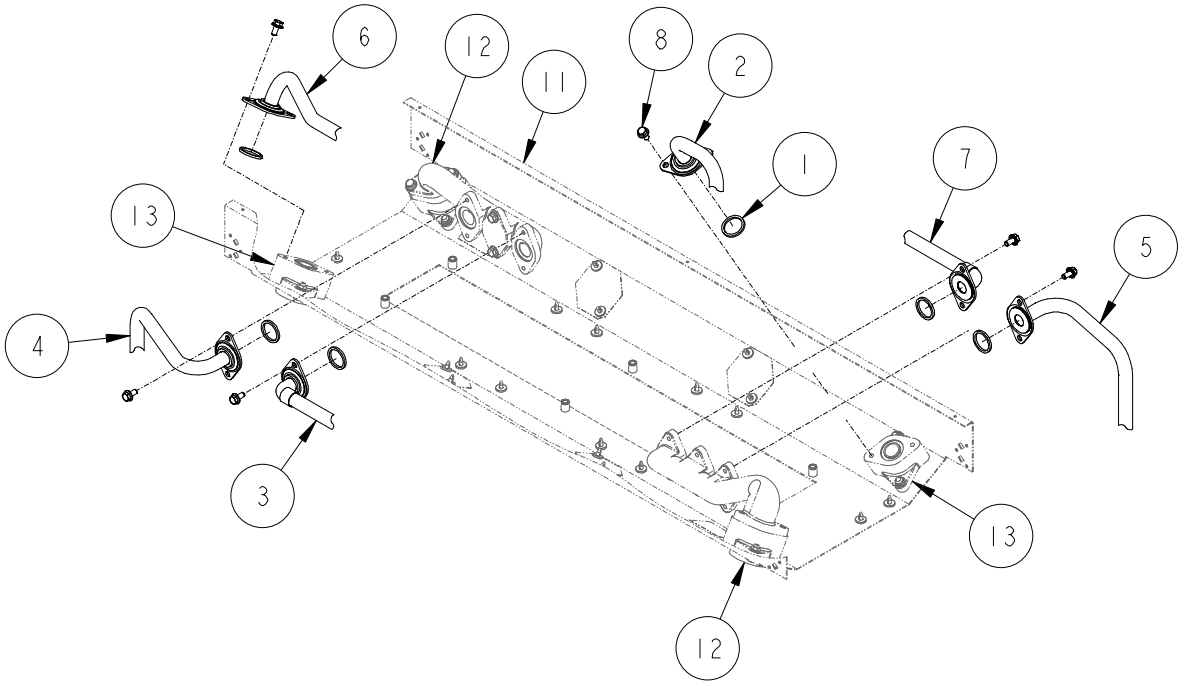

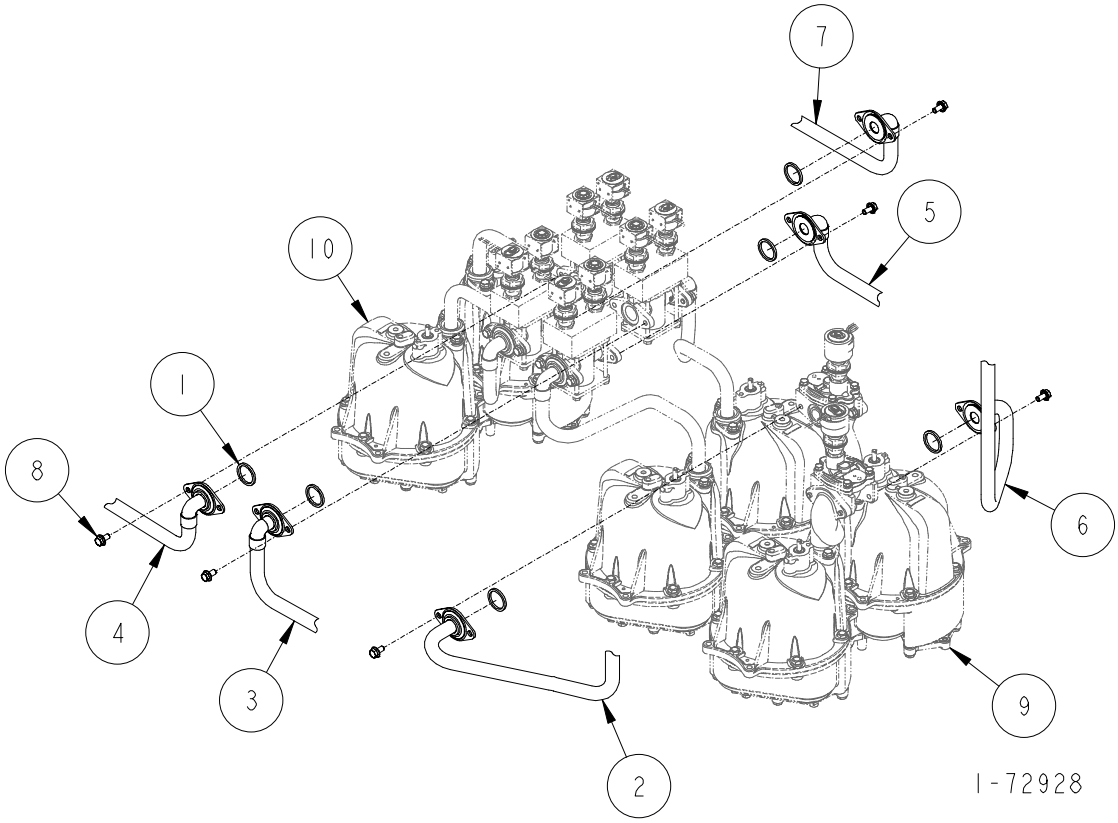

DISCHARGE ASSEMBLY

H412C-B3/4TL & H424C-B3/4TL (NON VAPOR)

ITEM NO.	PART NO.	DESCRIPTION
1	13-313235	Gasket
2	1-422642	Fuel Discharge Tube (H424C-B3/4TL Side "B")
3	1-422704	Fuel Discharge Tube (H424C-B3/4TL Side "B")
4	1-422732	Fuel Discharge Tube (H424C-B3/4TL Side "B")
5	1-422831	Fuel Discharge Tube (H412C-B3/4TL & H424C-B3/4TL Side "A")
6	1-422832	Fuel Discharge Tube (H412C-B3/4TL & H424C-B3/4TL Side "A")
7	1-422833	Fuel Discharge Tube (H412C-B3/4TL & H424C-B3/4TL Side "A")
8	35-55132	5/16-18 x 5/8" Long M-F Flange Whiz Lock Screw
9	For parts call out of Meter & Hydraulics Assembly see 72726.	
10	For parts call out of Meter & Hydraulics Assembly see 72728.	
11	For parts call out of Chassis Assembly see 72724.	
12	For parts call out of Outlet Adapter Assembly see 72761.	
13	For parts call out of Outlet Adapter Assembly see 72763.	

Reference for Tokheim internal use only:

321170	Fuel Tube Hydraulic Assembly
422624	Raceway Assembly

1-72928

4
A

DISCHARGE ASSEMBLY

H412C-B3/4TR & H424C-B3/4TR (NON VAPOR)

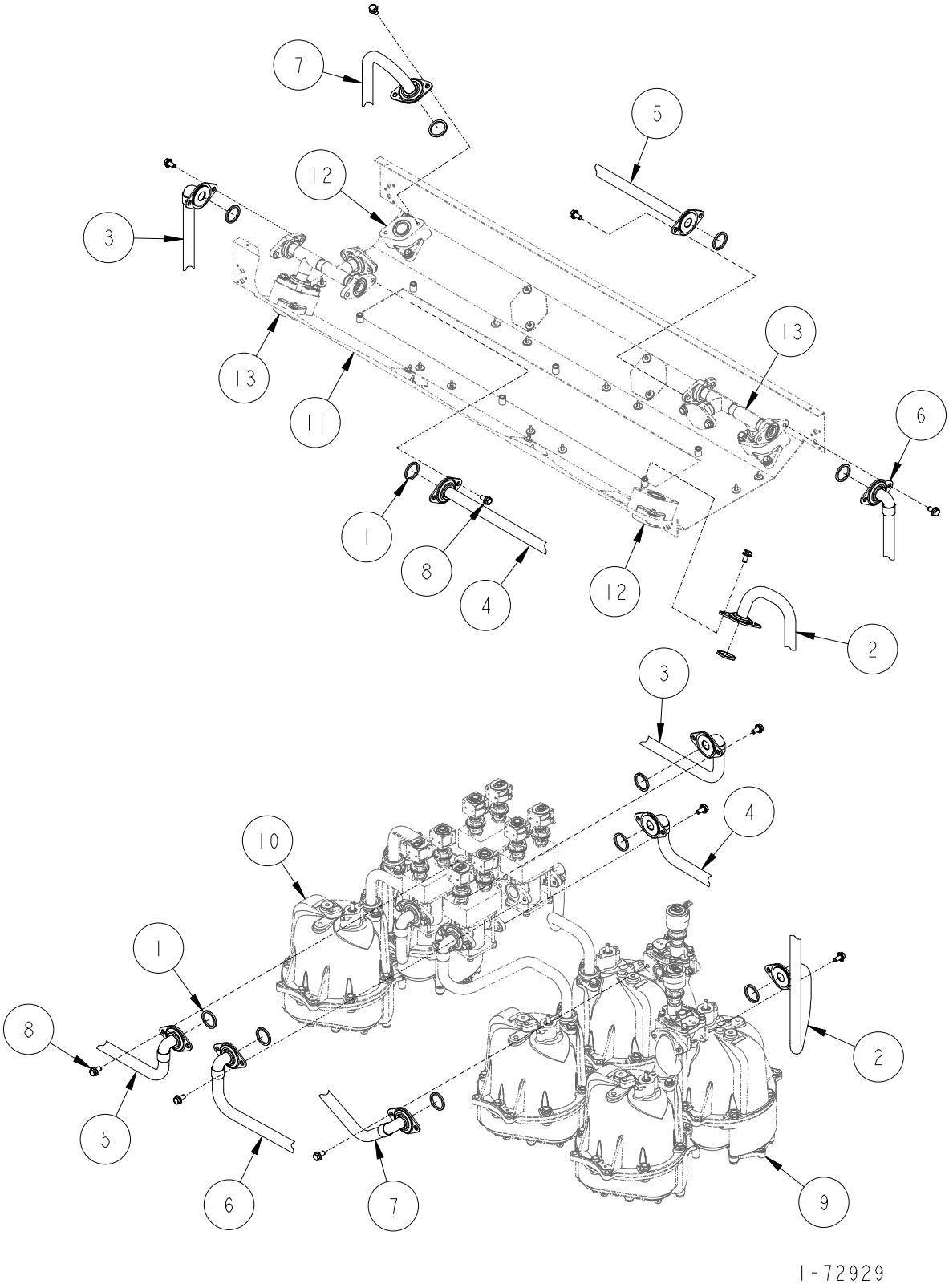

DISCHARGE ASSEMBLY

H412C-B3/4TR & H424C-B3/4TR (NON VAPOR)

ITEM NO.	PART NO.	DESCRIPTION
1	13-313235	Gasket
2	1-422641	Fuel Discharge Tube (H412C-B3/4TR & H424C-B3/4TR Side "A")
3	1-422702	Fuel Discharge Tube (H412C-B3/4TR & H424C-B3/4TR Side "A")
4	1-422703	Fuel Discharge Tube (H412C-B3/4TR & H424C-B3/4TR Side "A")
5	1-422844	Fuel Discharge Tube (H424C-B3/4TR Side "B")
6	1-422845	Fuel Discharge Tube (H424C-B3/4TR Side "B")
7	1-422881	Fuel Discharge Tube (H424C-B3/4TR Side "B")
8	35-55132	5/16-18 x 5/8" Long M-F Flange Whiz Lock Screw
9	For parts call out of Meter & Hydraulics Assembly see 72726.	
10	For parts call out of Meter & Hydraulics Assembly see 72728.	
11	For parts call out of Chassis Assembly see 72724.	
12	For parts call out of Outlet Adapter Assembly see 72763.	
13	For parts call out of Outlet Adapter Assembly see 72818.	

Reference for Tokheim internal use only:

321170	Fuel Tube Hydraulic Assembly
422624	Raceway Assembly

1-72929

4
A

DISCHARGE ASSEMBLY

H413C, H426C, H413D & H426D (NON VAPOR)

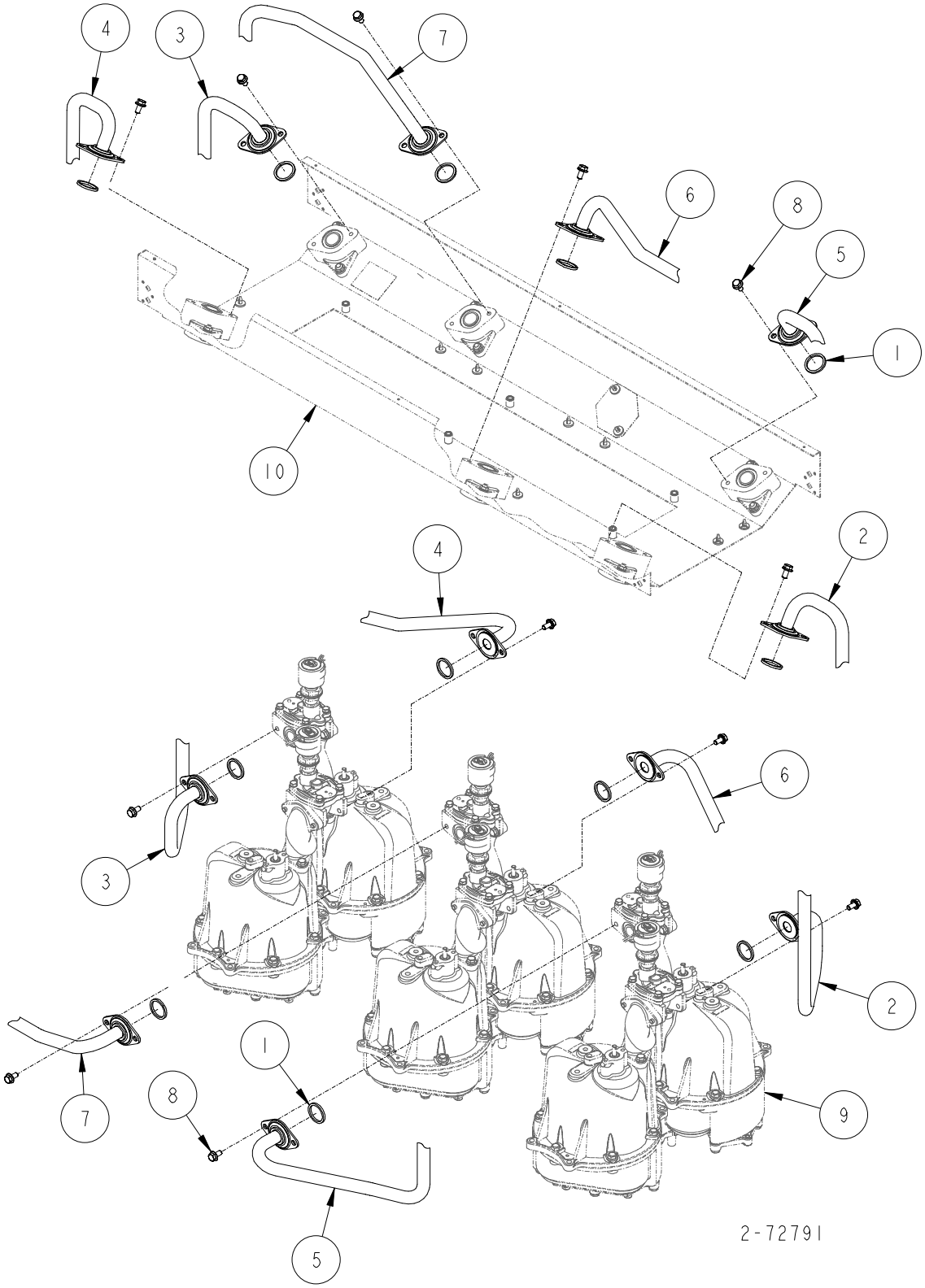

DISCHARGE ASSEMBLY

H413C, H426C, H413D & H426D (NON VAPOR)

ITEM NO.	PART NO.	DESCRIPTION
1	13-313235	Gasket
2	1-422641	Fuel Discharge Tube (H413C, H426C Side "A", H413D, H426D Side "A")
3	1-422641	Fuel Discharge Tube (H426C Side "B" & H426D Side "B")
4	1-422642	Fuel Discharge Tube (H413C, H426C Side "A", H413D, H426D Side "A")
5	1-422642	Fuel Discharge Tube (H426C Side "B" & H426D Side "B")
6	1-422643	Fuel Discharge Tube (H413C, H426C Side "A", H413D, H426D Side "A")
7	1-422643	Fuel Discharge Tube (H426C Side "B" & H426D Side "B")
8	35-55132	5/16-18 x 5/8" Long M-F Flange Whiz Lock Screw
9	For parts call out of Meter & Hydraulics Assembly see 72726.	
10	For parts call out of Chassis Assembly see 72724.	
11	For parts call out of Outlet Adapter Assembly see 72763.	

Reference for Tokheim internal use only:

321170	Fuel Tube Hydraulic Assembly
422624	Raceway Assembly

2-72791

4
A

DISCHARGE ASSEMBLY

H413C-TR, H426C-TR, H413D-TR & H426D-TR (NON VAPOR)

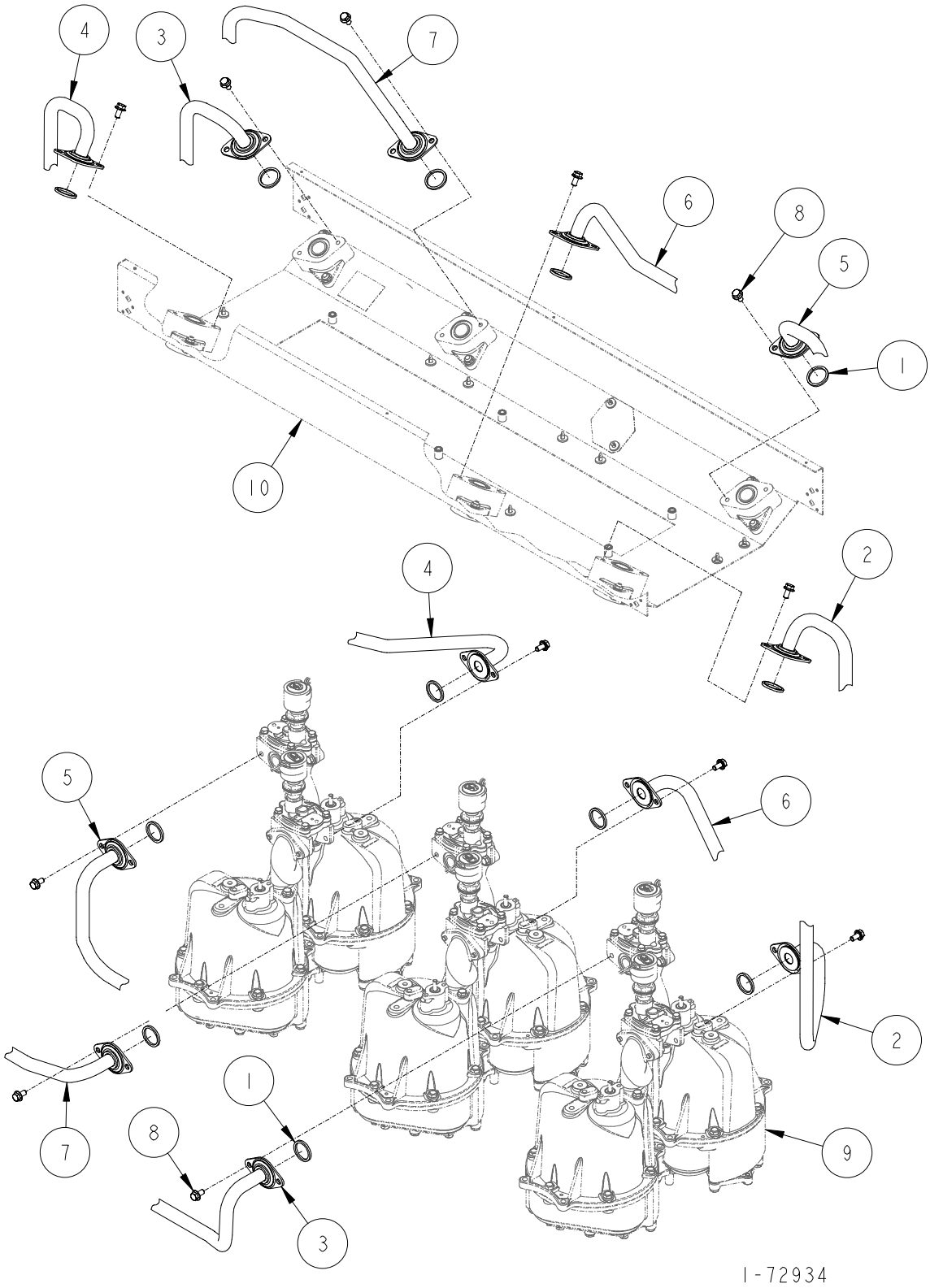

DISCHARGE ASSEMBLY

H413C-TR, H426C-TR, H413D-TR & H426D-TR (NON VAPOR)

ITEM NO.	PART NO.	DESCRIPTION
1	13-313235	Gasket
2	1-422641	Fuel Discharge Tube (H413C, H426C Side "A", H413D, H426D Side "A")
3	1-422883	Fuel Discharge Tube (H426C Side "B" & H426D Side "B")
4	1-422642	Fuel Discharge Tube (H413C, H426C Side "A", H413D, H426D Side "A")
5	1-422883	Fuel Discharge Tube (H426C Side "B" & H426D Side "B")
6	1-422643	Fuel Discharge Tube (H413C, H426C Side "A", H413D, H426D Side "A")
7	1-422643	Fuel Discharge Tube (H426C Side "B" & H426D Side "B")
8	35-55132	5/16-18 x 5/8" Long M-F Flange Whiz Lock Screw
9	For parts call out of Meter & Hydraulics Assembly see 72726.	
10	For parts call out of Chassis Assembly see 72724.	
11	For parts call out of Outlet Adapter Assembly see 72763.	

Reference for Tokheim internal use only:

321170	Fuel Tube Hydraulic Assembly
422624	Raceway Assembly

1-72934

4
A

DISCHARGE ASSEMBLY

H413C-EB & H426C-EB (NON VAPOR)

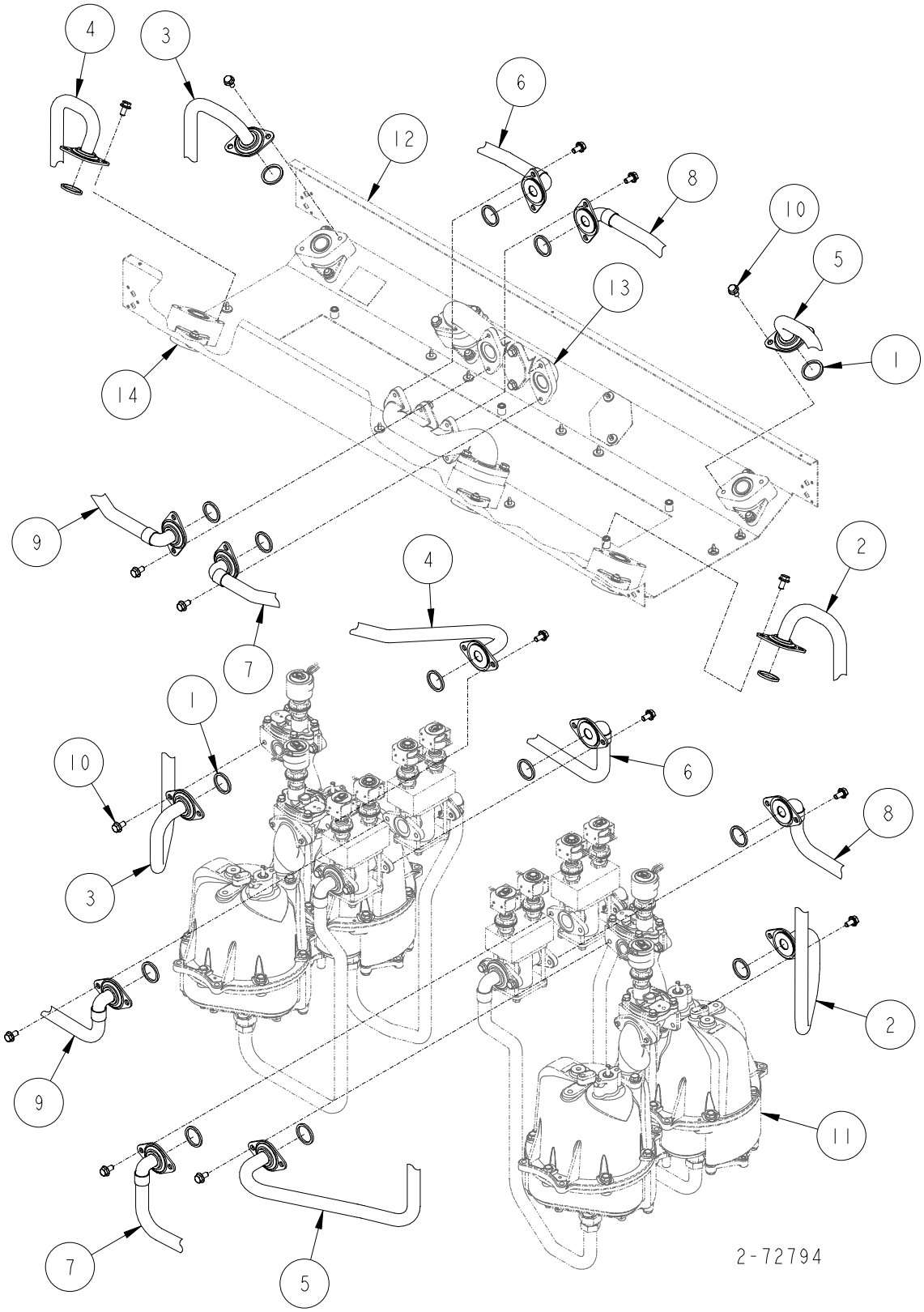

DISCHARGE ASSEMBLY

H413C-EB & H426C-EB (NON VAPOR)

ITEM NO.	PART NO.	DESCRIPTION
1	13-313235	Gasket
2	1-422641	Fuel Discharge Tube (H413C-EB & H426C-EB Side "A")
3	1-422641	Fuel Discharge Tube (H426C-EB Side "B")
4	1-422642	Fuel Discharge Tube (H413C-EB & H426C-EB Side "A")
5	1-422642	Fuel Discharge Tube (H426C-EB Side "B")
6	1-422706	Fuel Discharge Tube (H413C-EB & H426C-EB Side "A")
7	1-422706	Fuel Discharge Tube (H426C-EB Side "B")
8	1-422707	Fuel Discharge Tube (H413C-EB & H426C-EB Side "A")
9	1-422707	Fuel Discharge Tube (H426C-EB Side "B")
10	35-55132	5/16-18 x 5/8" Long M-F Flange Whiz Lock Screw
11	For parts call out of Meter & Hydraulics Assembly see 72726.	
12	For parts call out of Chassis Assembly see 72724.	
13	For parts call out of Outlet Adapter Assembly see 72761.	
14	For parts call out of Outlet Adapter Assembly see 72763.	

Reference for Tokheim internal use only:

321170	Fuel Tube Hydraulic Assembly
422624	Raceway Assembly

2-72794

4
A

DISCHARGE ASSEMBLY

H413C-EBTR & H426C-EBTR (NON VAPOR)

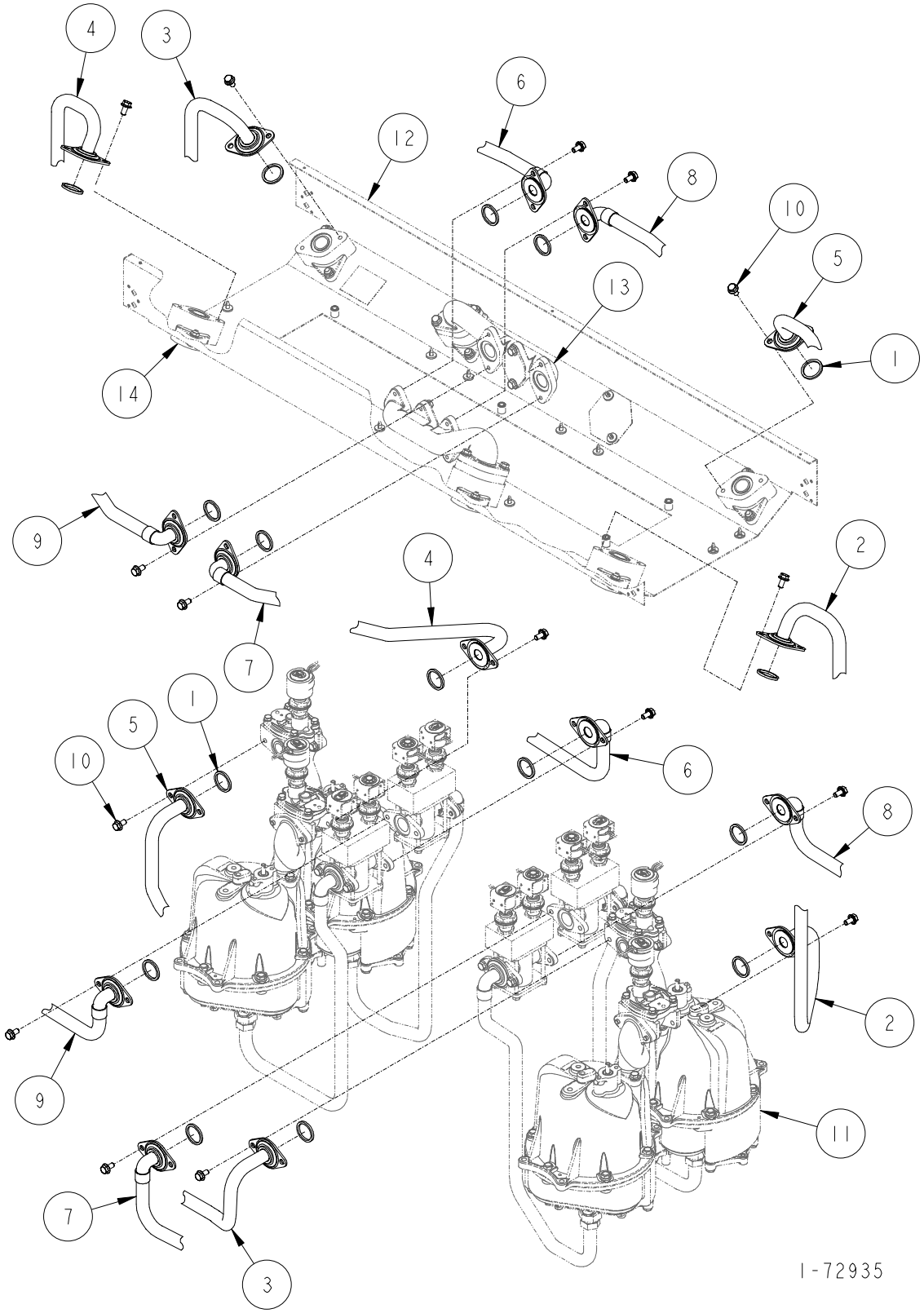

DISCHARGE ASSEMBLY

H413C-EBTR & H426C-EBTR (NON VAPOR)

ITEM NO.	PART NO.	DESCRIPTION
1	13-313235	Gasket
2	1-422641	Fuel Discharge Tube (H413C-EB & H426C-EB Side "A")
3	1-422883	Fuel Discharge Tube (H426C-EB Side "B")
4	1-422642	Fuel Discharge Tube (H413C-EB & H426C-EB Side "A")
5	1-422882	Fuel Discharge Tube (H426C-EB Side "B")
6	1-422706	Fuel Discharge Tube (H413C-EB & H426C-EB Side "A")
7	1-422706	Fuel Discharge Tube (H426C-EB Side "B")
8	1-422707	Fuel Discharge Tube (H413C-EB & H426C-EB Side "A")
9	1-422707	Fuel Discharge Tube (H426C-EB Side "B")
10	35-55132	5/16-18 x 5/8" Long M-F Flange Whiz Lock Screw
11	For parts call out of Meter & Hydraulics Assembly see 72726.	
12	For parts call out of Chassis Assembly see 72724.	
13	For parts call out of Outlet Adapter Assembly see 72761.	
14	For parts call out of Outlet Adapter Assembly see 72763.	

Reference for Tokheim internal use only:

321170	Fuel Tube Hydraulic Assembly
422624	Raceway Assembly

1-72935

4
A

DISCHARGE ASSEMBLY

H414C, H428C, H414D & H428D (NON VAPOR)

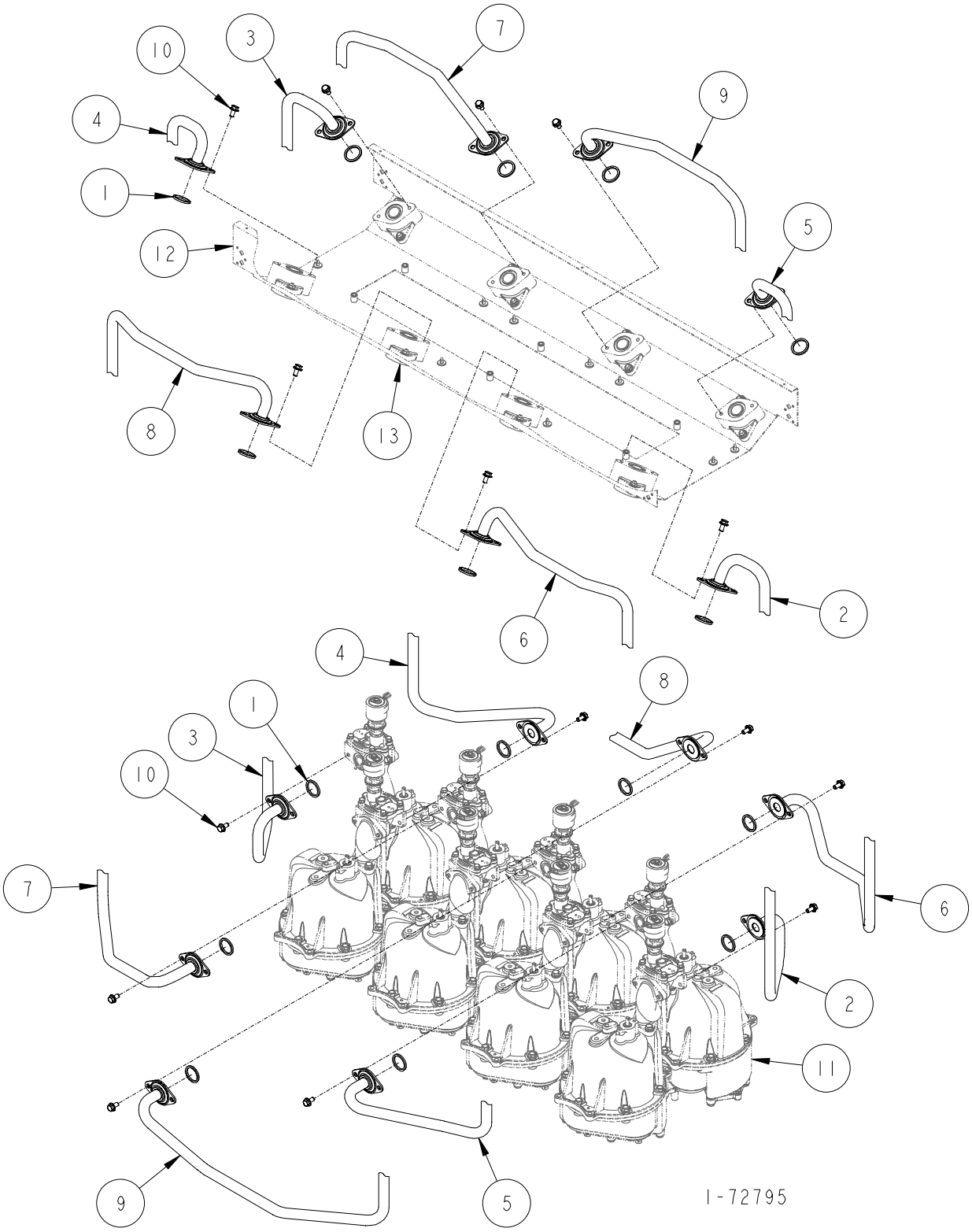

DISCHARGE ASSEMBLY

H414C, H428C, H414D & H428D (NON VAPOR)

ITEM NO.	PART NO.	DESCRIPTION
1	13-313235	Gasket
2	1-422641	Fuel Discharge Tube (H414C, H428C Side "A", H414D, H428D Side "A")
3	1-422641	Fuel Discharge Tube (H428C Side "B" & H428D Side "B")
4	1-422642	Fuel Discharge Tube (H414C, H428C Side "A", H414D, H428D Side "A")
5	1-422642	Fuel Discharge Tube (H428C Side "B" & H428D Side "B")
6	1-422694	Fuel Discharge Tube (H414C, H428C Side "A", H414D, H428D Side "A")
7	1-422694	Fuel Discharge Tube (H428C Side "B" & H428D Side "B")
8	1-422695	Fuel Discharge Tube (H414C, H428C Side "A", H414D, H428D Side "A")
9	1-422695	Fuel Discharge Tube (H428C Side "B" & H428D Side "B")
10	35-55132	5/16-18 x 5/8" Long M-F Flange Whiz Lock Screw
11	For parts call out of Meter & Hydraulics Assembly see 72726.	
12	For parts call out of Chassis Assembly see 72724.	
13	For parts call out of Outlet Adapter Assembly see 72763.	

Reference for Tokheim internal use only:

321170	Fuel Tube Hydraulic Assembly
422624	Raceway Assembly

1-72795

4
A

DISCHARGE ASSEMBLY

H414C-EB & H428C-EB (NON VAPOR)

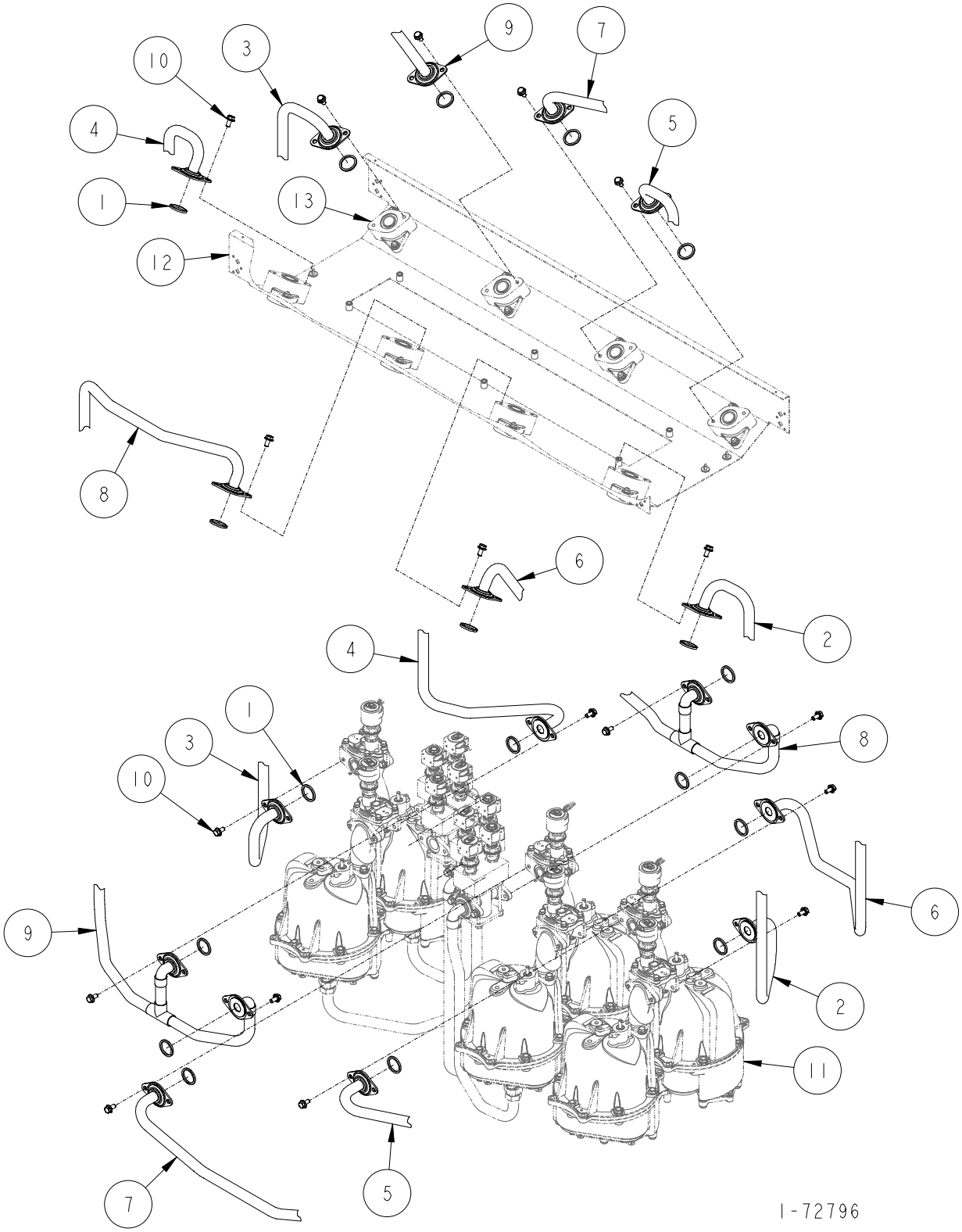

DISCHARGE ASSEMBLY

H414C-EB & H428C-EB (NON VAPOR)

ITEM NO.	PART NO.	DESCRIPTION
1	13-313235	Gasket
2	1-422641	Fuel Discharge Tube (H428C-EB Side "A")
3	1-422641	Fuel Discharge Tube (H428C-EB Side "B")
4	1-422642	Fuel Discharge Tube (H428C-EB Side "A")
5	1-422642	Fuel Diccharge Tube (H428C-EB Side "B")
6	1-422694	Fuel Discharge Tube (H428C-EB Side "A")
7	1-422720	Fuel Discharge Tube (H428C-EB Side "B")
8	1-422721	Fuel Discharge Tube (H428C-EB Side "A")
9	1-422722	Fuel Discharge Tube
10	35-55132	5/16-18 x 5/8" Long M-F Flange Whiz Lock Screw
11	For parts call out of Meter & Hydraulics Assembly see 72730.	
12	For parts call out of Chassis Assembly see 72724.	
13	For parts call out of Outlet Adapter Assembly see 72763.	

Reference for Tokheim internal use only:

321170	Fuel Tube Hydraulic Assembly
422624	Raceway Assembly

1-72796

4
A

DISCHARGE ASSEMBLY

H724C (NON VAPOR)

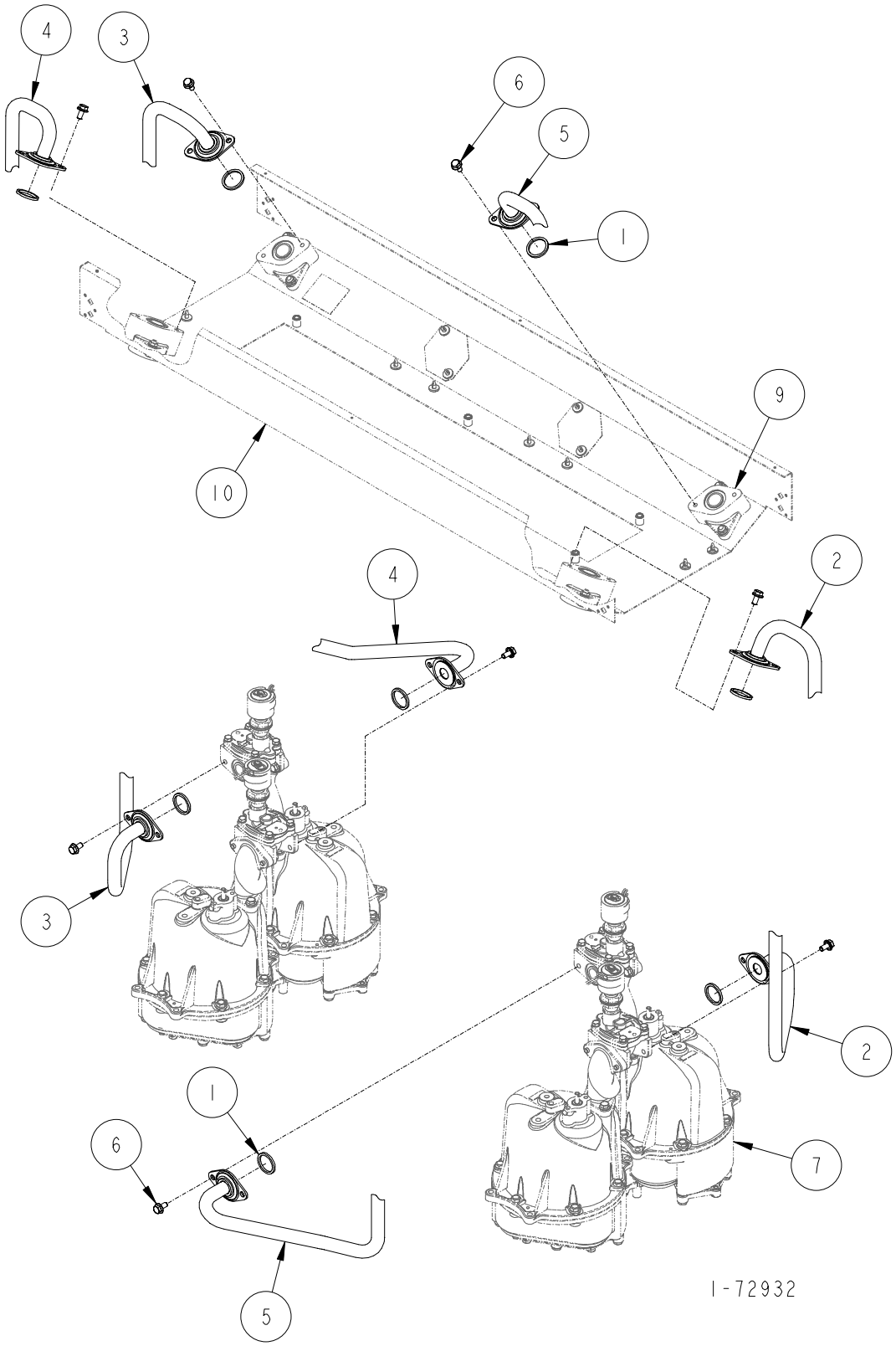

DISCHARGE ASSEMBLY

H724C (NON VAPOR)

ITEM NO.	PART NO.	DESCRIPTION
1	13-313235	Gasket
2	1-422641	Fuel Discharge Tube (H724C Side "A")
3	1-422641	Fuel Discharge Tube (H724C Side "B")
4	1-422642	Fuel Discharge Tube (H724C Side "A")
5	1-422642	Fuel Discharge Tube (H724C Side "B")
6	35-55132	5/16-18 x 5/8" Long M-F Flange Whiz Lock Screw
7	For parts call out of Meter & Hydraulics Assembly see 72726.	
8	For parts call out of Chassis Assembly see 72724.	
9	For parts call out of Outlet Adapter Assembly see 72763.	

Reference for Tokheim internal use only:

321170	Fuel Tube Hydraulic Assembly
422624	Raceway Assembly

1-72932

4
A

OUTLET ADAPTER ASSEMBLY

NON VAPOR

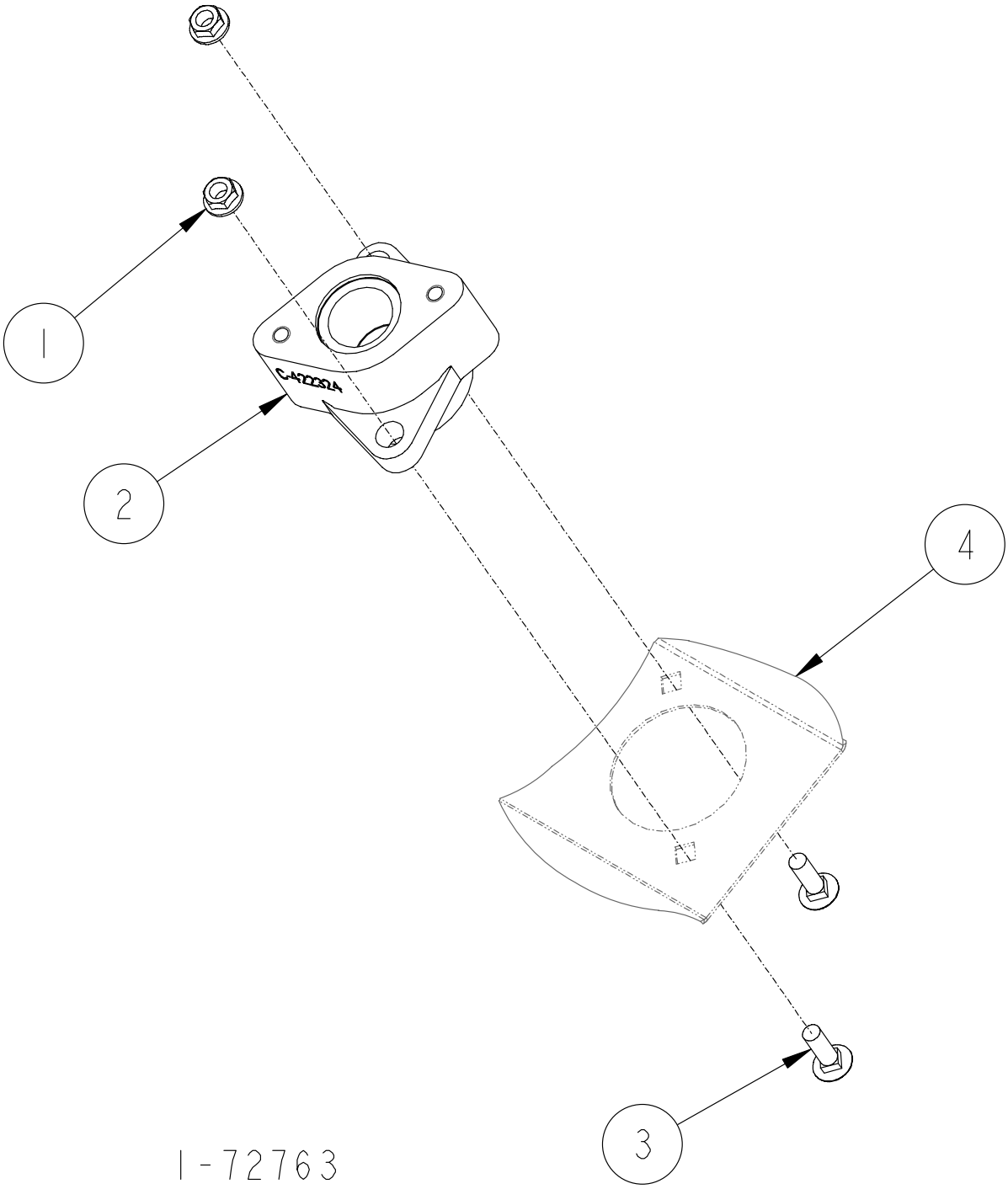

OUTLET ADAPTER ASSEMBLY
(NON VAPOR)

ITEM NO.	PART NO.	DESCRIPTION
1	02-54752	5/16-18 M-F Flange Whiz Lock Nut
2	Outlet Adapter	
	1-422324	3/4"
	2-422324	1" (High Volume only)
3	39-52198	5/16-18 x 1" Long Carriage Bolt
4	For parts call out of Chassis Assembly see:	
	72779	H300C & H300DSeries
	72724	H400C & H400DSeries
	Reference for Tokheim internal use only:	
	422624	Raceway Assembly (H400C & H400D Series)
	422740	Raceway Assembly (H300C & H300D Series)

1-72763

OUTLET ADAPTER ASSEMBLY
(NON-VAPOR)

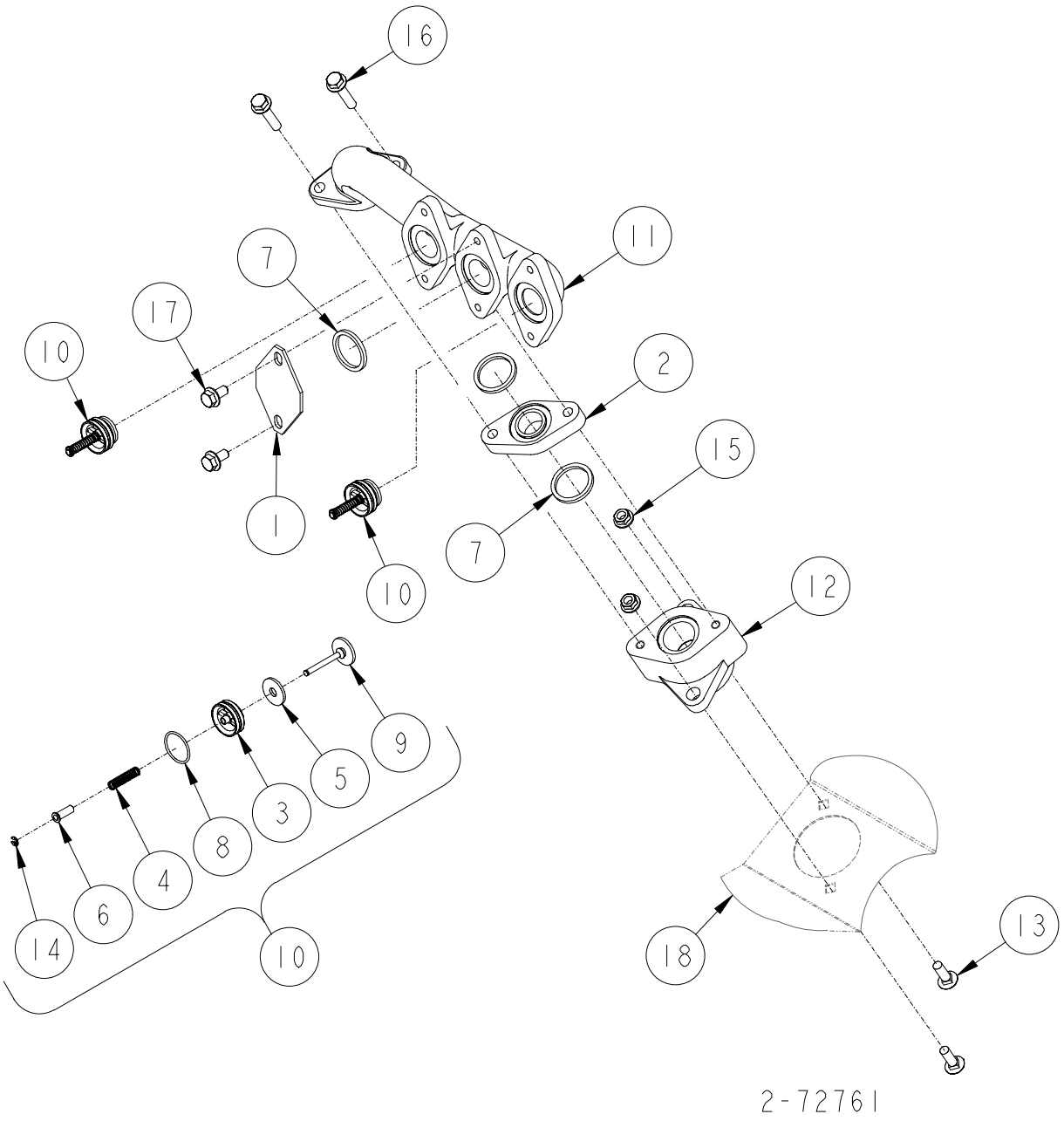

OUTLET ADAPTER ASSEMBLY

(Non-Vapor)

ITEM NO.	PART NO.	DESCRIPTION
1	Vapor	
	1-132494	Flange
	1-228345	Cap
2	4-227299	Flange (Used with old Outlet Manifold 1-421962 only)
3	Check Valve Seat	
	1-233801	All models except Canada
	2-233801	Canada
4	1-233802	Spring
5	1-233805	Poppet Seal
6	1-233807	Stem Sleeve
7	13-313235	Gasket
8	18-318940	O Ring
9	Poppet Assembly	
	1-321451	All models except Canada
	2-321451	Canada
10	Check Valve Assembly	
	321452-1	All models except Canada
	321452-2	Canada
11	Outlet Manifold	
	1-421962	Old Design (No longer used)
	1-423000	New Design
12	1-422324	Outlet Adapter
13	39-52198	5/16-18 x 1" Long Carriage Bolt
14	05-52482	Truarc Retaining Ring
15	02-54752	5/16-18 M-F Flange Whiz Lock Nut
16	35-55132	5/16-18 x 5/8" Long M-F Flange Whiz Lock Screw
17	41-55132	M-F Flange Whiz Lock Screw
18	For parts call out of Chassis Assembly see:	
	72779	H300C Series
	72724	H400C Series
	Reference for Tokheim internal use only:	
	422624	Raceway Assembly (H400C & H400D Series)
	422740	Raceway Assembly (H300C & H300D Series)

2-72761

4
A

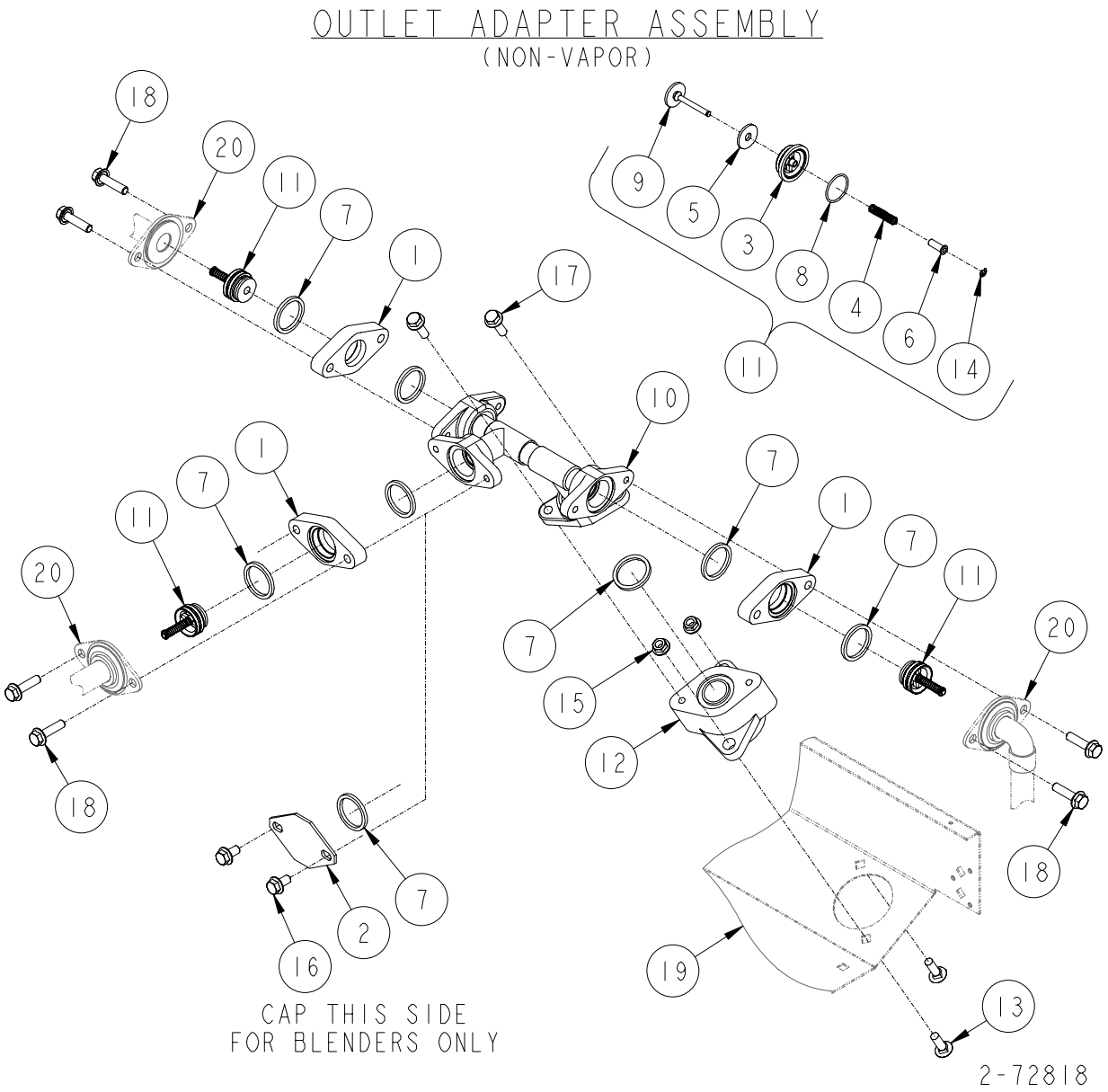
OUTLET ADAPTER ASSEMBLY
(NON-VAPOR)
18
20
11
7
1
17
9
5
3
8
4
6
14
11
10
1
7
11
20
7
1
7
11
20
7
15
12
18
18
7
2
16
19
13
CAP THIS SIDE
FOR BLENDERS ONLY
2-72818

OUTLET ADAPTER ASSEMBLY

(Non-Vapor)

ITEM NO.	PART NO.	DESCRIPTION
1	5-227299	Flange
2	1-228345	Manifold Cap
3	Check Valve Seat	
	1-233801	All models except Canada
	2-233801	Canada
4	1-233802	Spring
5	1-233805	Poppet Seal
6	1-233807	Stem Sleeve
7	13-313235	Gasket
8	18-318940	O Ring
9	Poppet Assembly	
	1-321451	All models except Canada
	2-321451	Canada
10	1-321491	Manifold Assembly
11	Check Valve Assembly	
	321452-1	All models except Canada
	321452-2	Canada
12	1-422324	Outlet Adapter
13	39-52198	5/16-18 x 1" Long Carriage Bolt
14	05-52482	Truarc Retaining Ring
15	02-54752	5/16-18 M-F Flange Whiz Lock Nut
16	35-55132	5/16-18 x 5/8" Long M-F Flange Whiz Lock Screw
17	38-55132	5/16-18 x 1" Long M-F Flange Whiz Lock Screw
18	40-55132	5/16-18 x 1-1/4" Long M-F Flange Whiz Lock Screw
19	For parts call out of Chassis Assembly see:	
	72779	H300C & H300D Series
	72724	H400C & H400D Series
20	For parts call out of Discharge Assembly see:	
	72792	H412C/D & H422C/D
	72793	H412C-B3/4 & H424C-B3/4
	72929	H412C-B3/4TR & H424C-B3/4TR
	72930	H412C/D-TR & H424C/D-TR
	72931	H411C-B3/5MR & H422C-B3/5MR
	Reference for Tokheim internal use only:	
	422624	Raceway Assembly (H400C & H400D Series)
	422740	Raceway Assembly (H300C & H300D Series)

2-72818

4
A

FUEL TUBE CLAMP ASSEMBLY

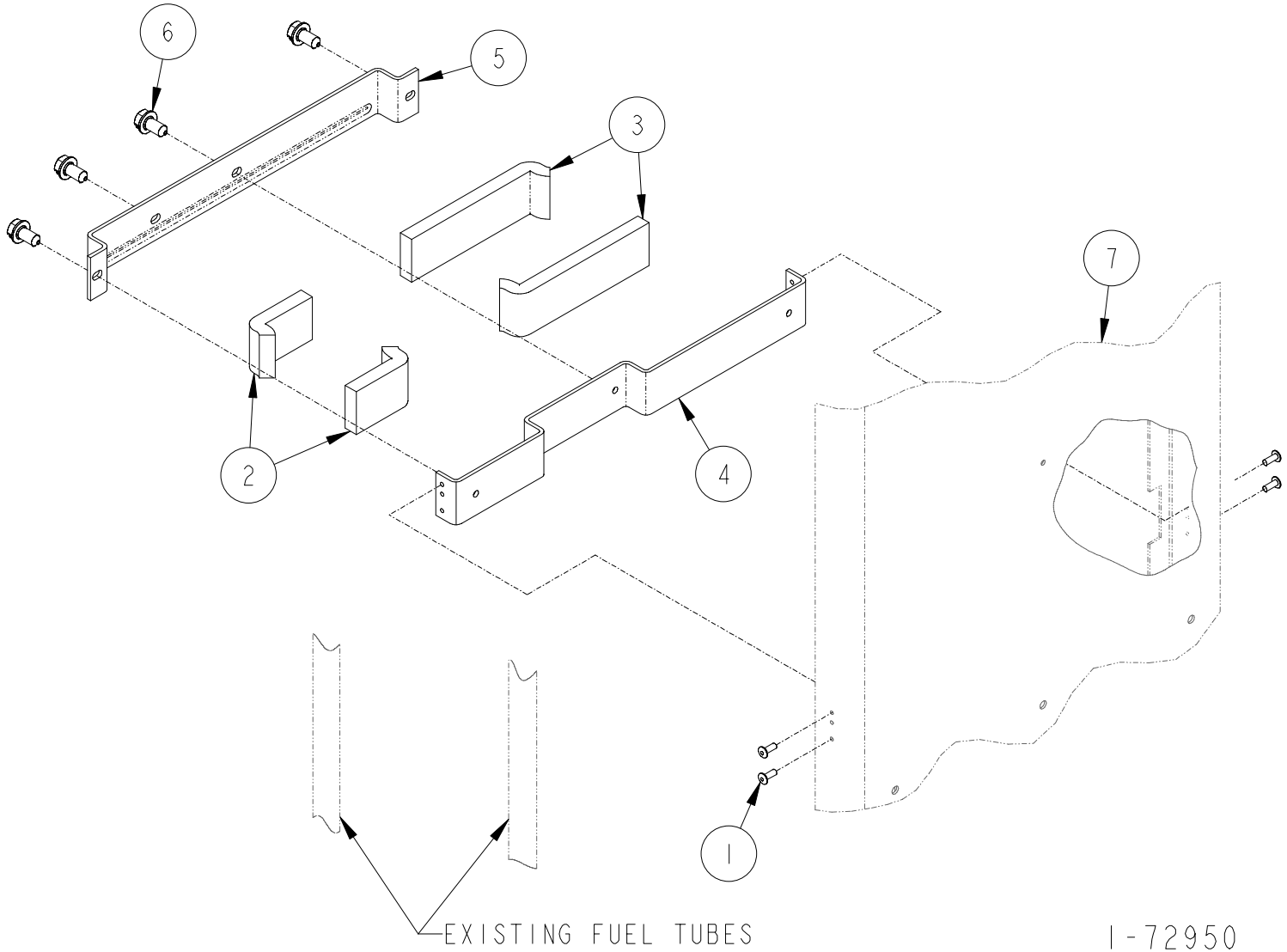

FUEL TUBE CLAMP ASSEMBLY

ITEM NO.	PART NO.	DESCRIPTION
1	2-128281	Rivet
2	15-317638	Cushion
3	49-317638	Cushion
4	1-321415	Tube Bracket
5	1-321416	Tube Holder
6	69-55392	1/4 x 1/2" Long Hex Washer Head Tapping Screw
7	For parts call out of Chassis Assembly see:	
	72779	45"
	72724	30"
	Reference for Tokheim internal use only:	
	321170	45"
	321212	30"

1-72950

SECTION 4B

898 Discharge Hydraulics IV & Full Vapor (Balance)

Page Number

Discharge Assembly
- H311C, H311D 4B-2, 4B-3
- This page reserved for future use 4B-4, 4B-5
- H312C, H312D 4B-6, 4B-7
- H322C, H322D 4B-8, 4B-9
- H322C-B3/5 ..... 4B-10, 4B-11
- H324C, H324D 4B-12, 4B-13
- These pages reserved for future use ..... 4B-14—4B-25
- H413C, H413D 4B-26, 4B-27
- H413C-EB 4B-28, 4B-29
- H414C, H414D 4B-30, 4B-31
- This page reserved for future use 4B-32, 4B-33
- H422C, H422D 4B-34, 4B-35
- H422C-B3/5 ..... 4B-36, 4B-37
- H422C-B3/5MR 4B-38, 4B-39
- H424C, H424D 4B-40, 4B-41
- H424C-IN/FN & H424D-IN/FN 4B-42, 4B-43
- H424C-TLIN/FN & H424D-TLIN/FN 4B-44, 4B-45
- H424C-TRIN/FN & H424D-TRIN/FN 4B-46, 4B-47
- H424C-B3/4-IN/FN 4B-48, 4B-49
- H424C-B3/4TL-IN/FN 4B-50, 4B-51
- H424C-B3/4TR-IN/FN 4B-52, 4B-53
- H424C-B3/4+ Diesel 4B-54, 4B-55

Page Number

Discharge Assembly (Continued)
- H426C, H426D 4B-56, 4B-57
- H426C-EB 4B-58, 4B-59
- H428C, H428D 4B-60, 4B-61
- H428C-EB 4B-62, 4B-63

Suction Vapor Assembly 4B-64, 4B-65

Outlet Adapter Assembly
- H311C, H312C, H322C, H324C, H413C, H424C, H424C-B3/4, H424C-B3/4+DIESEL, H426C, H426C-EB, H428C, H428C-EB, H311D, H312D, H322D, H324D, H413D, H424D, H426D, H428D 4B-66, 4B-67
- H322C-B3/5, H422C, H422C-B3/5, H424C, H424C-B3/4, H424C-B3/4+DIESEL, H426C-EB 4B-68, 4B-69
- H424C-IV, H424C-B3/4-IV, H424C-B3/4-TLIN/FN, H424C-B3/4-TRIN/FN H424D-IV 4B-70, 4B-71
- Non Vapor 4B-72, 4B-73

Fuel Tube Clamp Assembly 4B-74, 4B-75

DISCHARGE ASSEMBLY

H311C-IV & Full (Balance) & H311D-IV & Full (Balance)

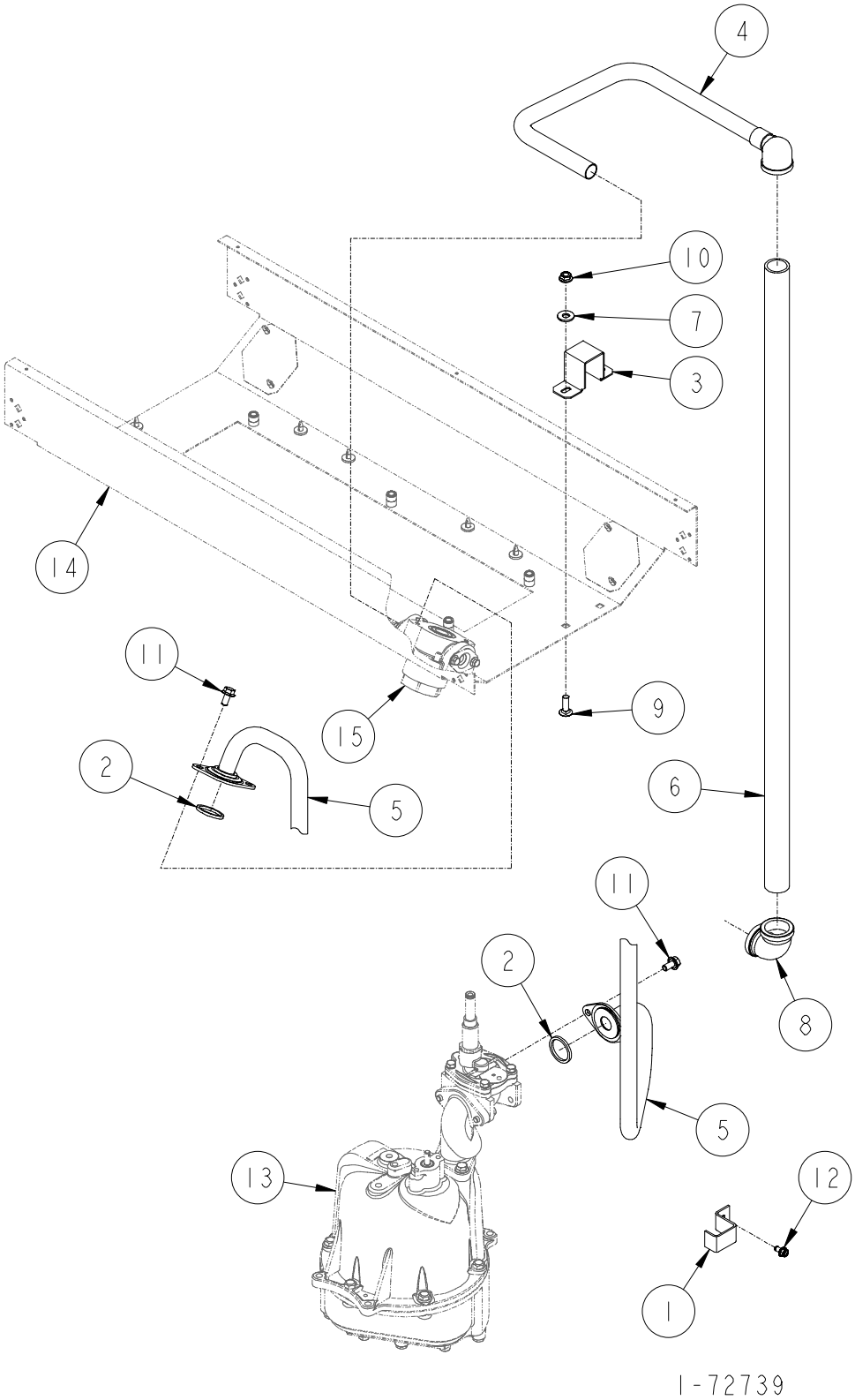

DISCHARGE ASSEMBLY

H311C-IV & Full (Balance) & H311D-IV & Full (Balance)

ITEM NO.	PART NO.	DESCRIPTION
1	1-231856	Discharge Tube Bracket
2	13-313235	Gasket
3	1-321154	Down Pipe Bracket
4	5-422734	Vapor Outlet Tube
5	1-422641	Fuel Discharge Tube
6	335-50510	1-1/2" x 81-1/2" Long Pipe
7	03-50611	5/16 Plate Washer
8	06-51700	1" x 90° Elbow - Banded
9	39-52198	5/16-18 x 1" Long Carriage Bolt
10	02-54752	5/16-18 M-F Flange Whiz Lock Nut
11	35-55132	5/16-18 x 5/8" Long M-F Flange Whiz Lock Screw
12	69-55392	1/4 x 1/2" Long Hex Washer Head Tapping Screw
13	For parts call out of Meter & Hydraulics Assembly see 72726.	
14	For parts call out of Chassis Assembly see 72779.	
15	For parts call out of Outlet Adapter Assembly see 72752.	

Reference for Tokheim internal use only:

321212	Fuel Tube Hydraulic Assembly
422740	Raceway Assembly

1-72739

4
B

This page reserved for future use.

This page reserved for future use.

DISCHARGE ASSEMBLY

H312C-IV & Full (Balance) & H312D-IV & Full (Balance)

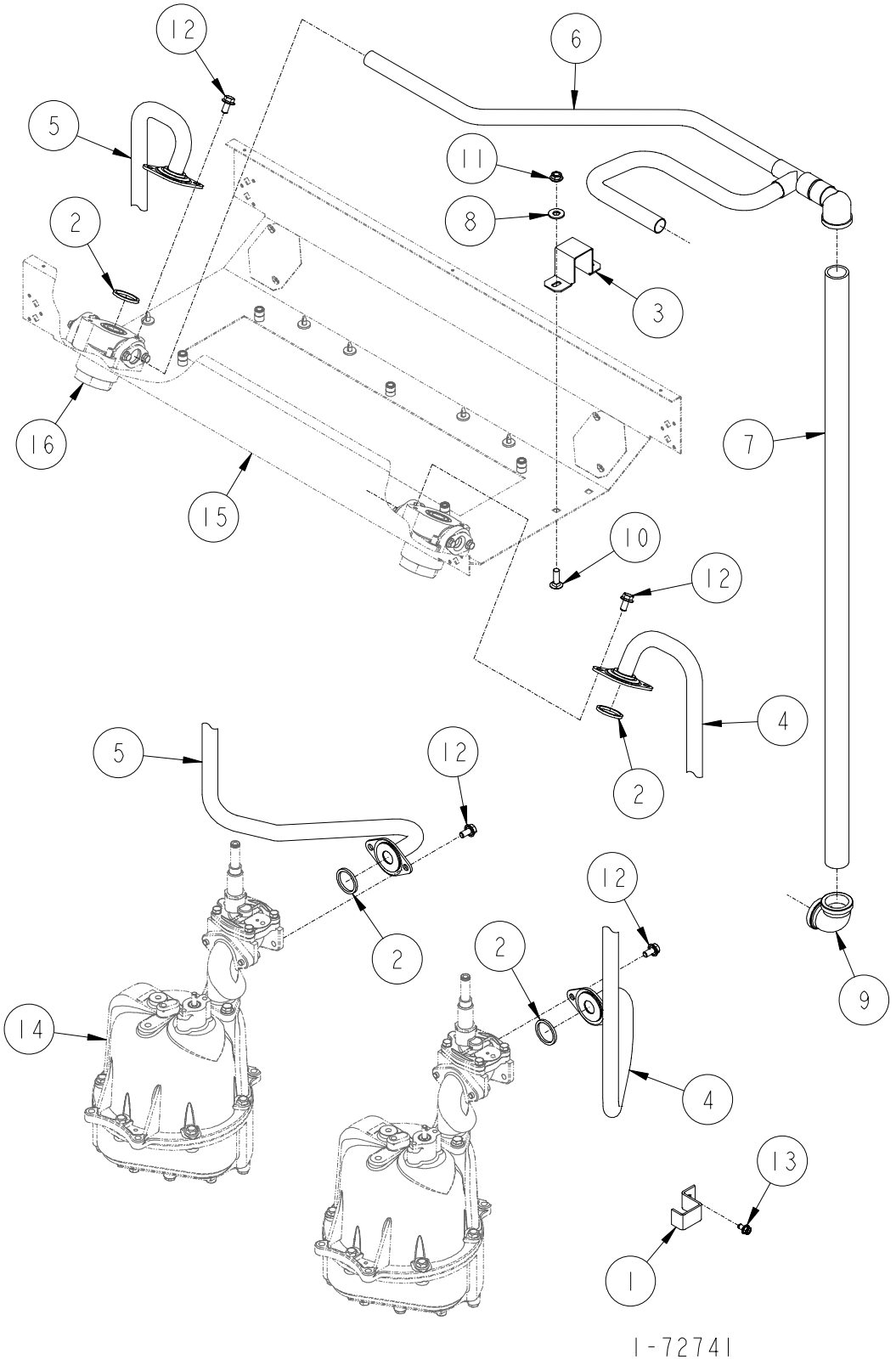

DISCHARGE ASSEMBLY

H312C-IV & Full (Balance) &H312D-IV & Full (Balance)

ITEM NO.	PART NO.	DESCRIPTION
1	1-231856	Discharge Tube Bracket
2	13-313235	Gasket
3	1-321154	Down Pipe Bracket
4	1-422641	Fuel Discharge Tube
5	1-422642	Fuel Discharge Tube
6	4-422734	Vapor Outlet Tube
7	335-50510	1-1/2" x 81-1/2" Long Pipe
8	03-50611	5/16 Plate Washer
9	06-51700	1" x 90° Elbow - Banded
10	39-52198	5/16-18 x 1" Long Carriage Bolt
11	02-54752	5/16-18 M-F Flange Whiz Lock Nut
12	35-55132	5/16-18 x 5/8" Long M-F Flange Whiz Lock Screw
13	69-55392	1/4 x 1/2" Long Hex Washer Head Tapping Screw
14	For parts call out of Meter & Hydraulics Assembly see 72726.	
15	For parts call out of Chassis Assembly see 72779.	
16	For parts call out of Outlet Adapter Assembly see 72752.	

Reference for Tokheim internal use only:

321212	Fuel Tube Hydraulic Assembly
422740	Raceway Assembly

1-72741

4
B

DISCHARGE ASSEMBLY

H322C-IV & Full (Balance) & H322D-IV & Full (Balance)

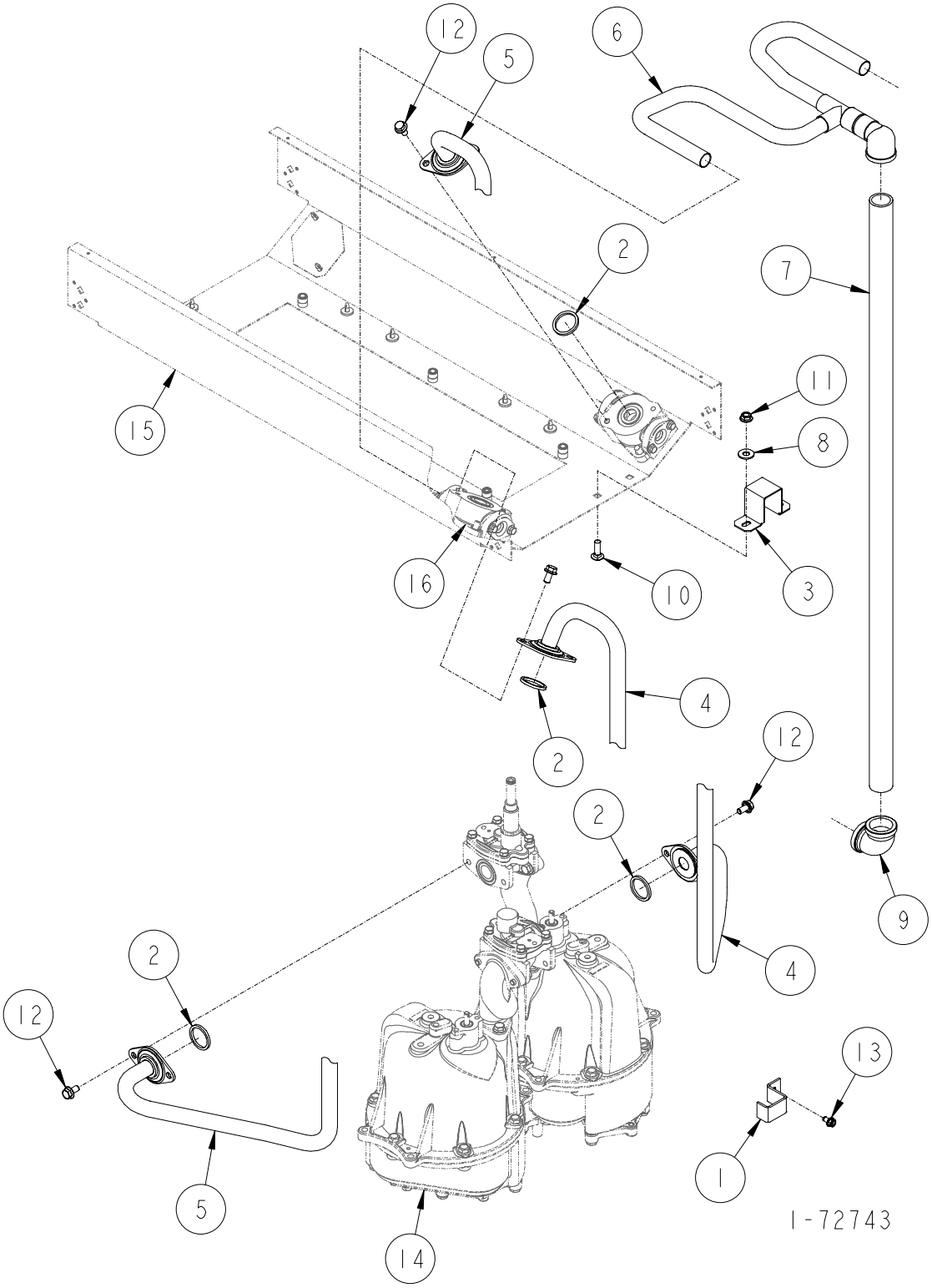

DISCHARGE ASSEMBLY

H322C-IV & Full (Balance) & H322D-IV & Full (Balance)

ITEM NO.	PART NO.	DESCRIPTION
1	1-231856	Discharge Tube Bracket
2	13-313235	Gasket
3	1-321154	Down Pipe Bracket
4	1-422641	Fuel Discharge Tube
5	1-422642	Fuel Discharge Tube
6	4-422734	Vapor Outlet Tube
7	335-50510	1-1/2" x 81-1/2" Long Pipe
8	03-50611	5/16 Plate Washer
9	06-51700	1" x 90° Elbow - Banded
10	39-52198	5/16-18 x 1" Long Carriage Bolt
11	02-54752	5/16-18 M-F Flange Whiz Lock Nut
12	35-55132	5/16-18 x 5/8" Long M-F Flange Whiz Lock Screw
13	69-55392	1/4 x 1/2" Long Hex Washer Head Tapping Screw
14	For parts call out of Meter & Hydraulics Assembly see 72726.	
15	For parts call out of Chassis Assembly see 72779.	
16	For parts call out of Outlet Adapter Assembly see 72752.	

Reference for Tokheim internal use only:

321212	Fuel Tube Hydraulic Assembly
422740	Raceway Assembly

1-72743

4
B

DISCHARGE ASSEMBLY

H322C-B3/5-IV & Full (Balance)

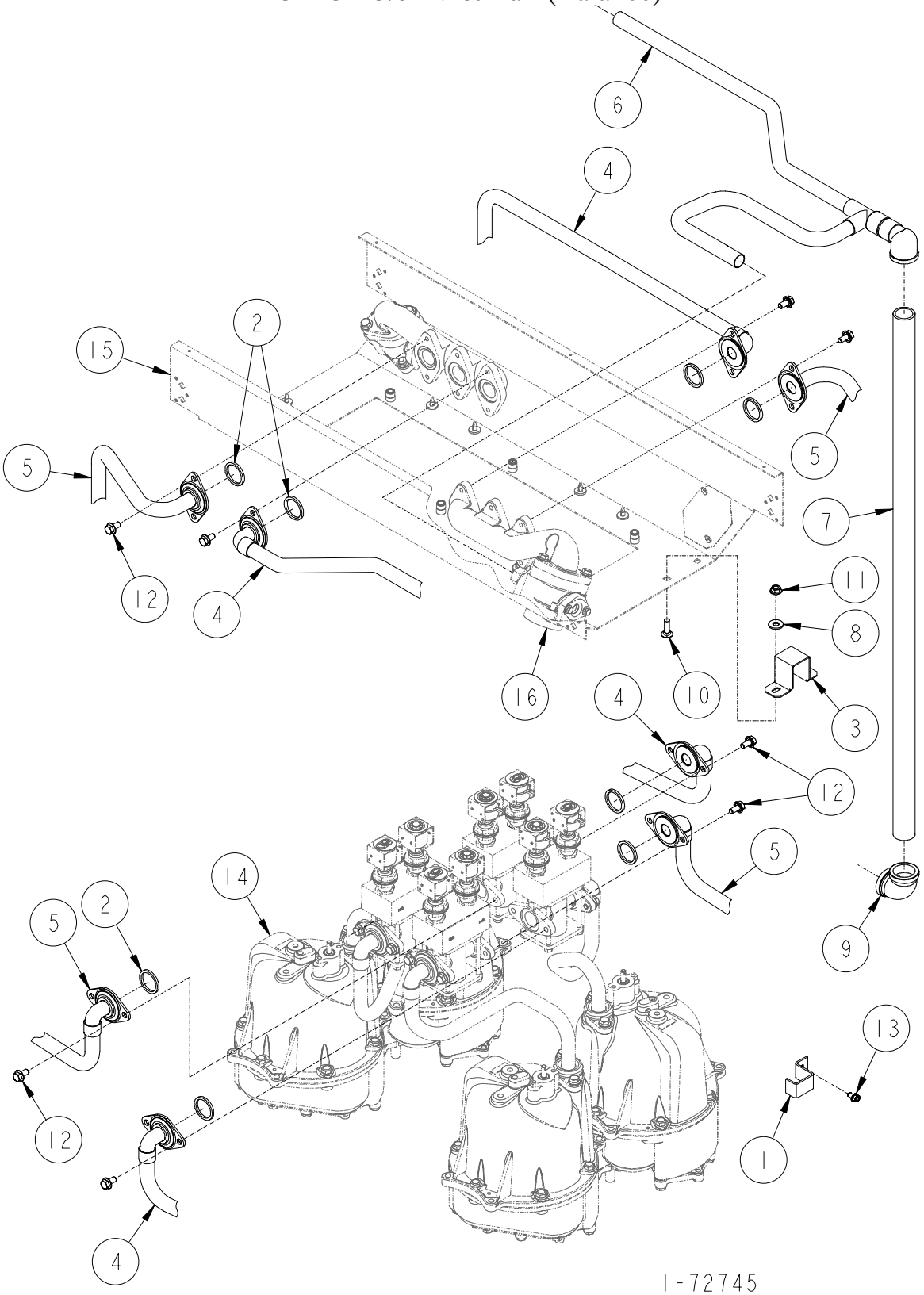

DISCHARGE ASSEMBLY

H322C-B3/5-IV & Full (Balance)

ITEM NO.	PART NO.	DESCRIPTION
1	1-231856	Discharge Tube Bracket
2	13-313235	Gasket
3	1-321154	Down Pipe Bracket
4	1-422696	Fuel Discharge Tube
5	1-422711	Fuel Discharge Tube
6	4-422734	Vapor Outlet Tube
7	335-50510	1-1/2" x 81-1/2" Long Pipe
8	03-50611	5/16" Plate Washer
9	06-51700	1" x 90° Elbow - Banded
10	39-52198	5/16-18 x 1" Long Carriage Bolt
11	02-54752	5/16-18 M-F Flange Whiz Lock Nut
12	35-55132	5/16-18 x 5/8" Long M-F Flange Whiz Lock Screw
13	69-55392	1/4 x 1/2" Long Hex Washer Head Tapping Screw
14	For parts call out of Meter & Hydraulics Assembly see 72726.	
15	For parts call out of Chassis Assembly see 72779.	
16	For parts call out of Outlet Adapter Assembly see 72752.	

Reference for Tokheim internal use only:

321212	Fuel Tube Hydraulic Assembly
422740	Raceway Assembly

1-72745

4
B

DISCHARGE ASSEMBLY

H324C-IV & Full (Balance) & H324D-IV & Full (Balance)

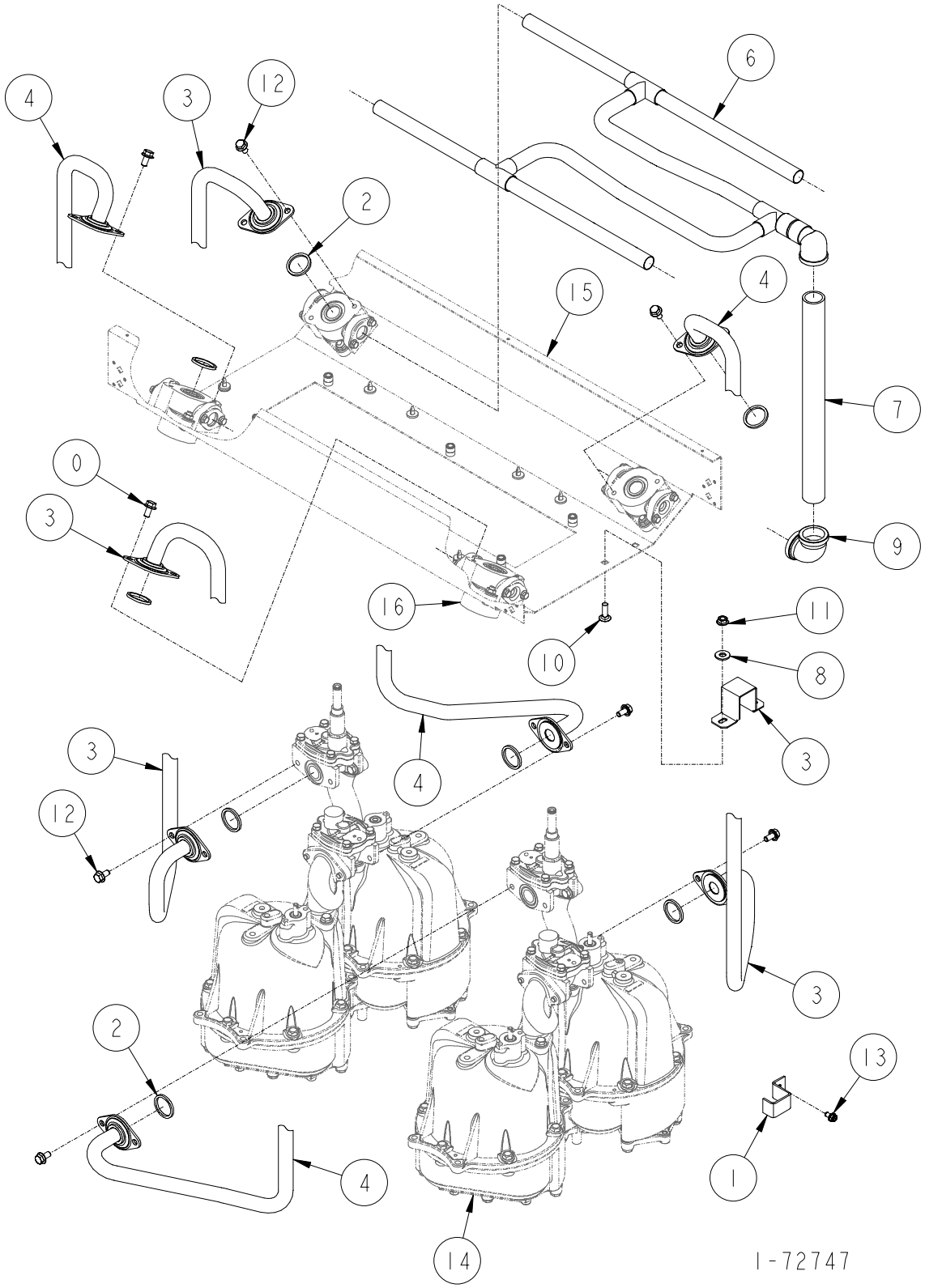

DISCHARGE ASSEMBLY

H324C-IV & Full (Balance) & H324D-IV & Full (Balance)

ITEM NO.	PART NO.	DESCRIPTION
1	1-231856	Discharge Tube Bracket
2	13-313235	Gasket
3	1-321154	Down Pipe Bracket
4	1-422641	Fuel Discharge Tube
5	1-422642	Fuel Discharge Tube
6	4-422734	Vapor Outlet Tube
7	335-50510	1-1/2" x 81-1/2" Long Pipe
8	03-50611	5/16 Plate Washer
9	06-51700	1" x 90° Elbow - Banded
10	39-52198	5/16-18 x 1" Long Carriage Bolt
11	02-54752	5/16-18 M-F Flange Whiz Lock Nut
12	35-55132	5/16-18 x 5/8" Long M-F Flange Whiz Lock Screw
13	69-55392	1/4 x 1/2" Long Hex Washer Head Tapping Screw
14	For parts call out of Meter & Hydraulics Assembly see 72726.	
15	For parts call out of Chassis Assembly see 72779.	
16	For parts call out of Outlet Adapter Assembly see 72752.	

Reference for Tokheim internal use only:

321212	Fuel Tube Hydraulic Assembly
422740	Raceway Assembly

1-72747

4
B

This page reserved for future use.

This page reserved for future use.

This page reserved for future use.

This page reserved for future use.

This page reserved for future use.

This page reserved for future use.

This page reserved for future use.

This page reserved for future use.

This page reserved for future use.

This page reserved for future use.

This page reserved for future use.

This page reserved for future use.

DISCHARGE ASSEMBLY

H413C-IV & Full (Balance) & H413D-IV & Full (Balance)

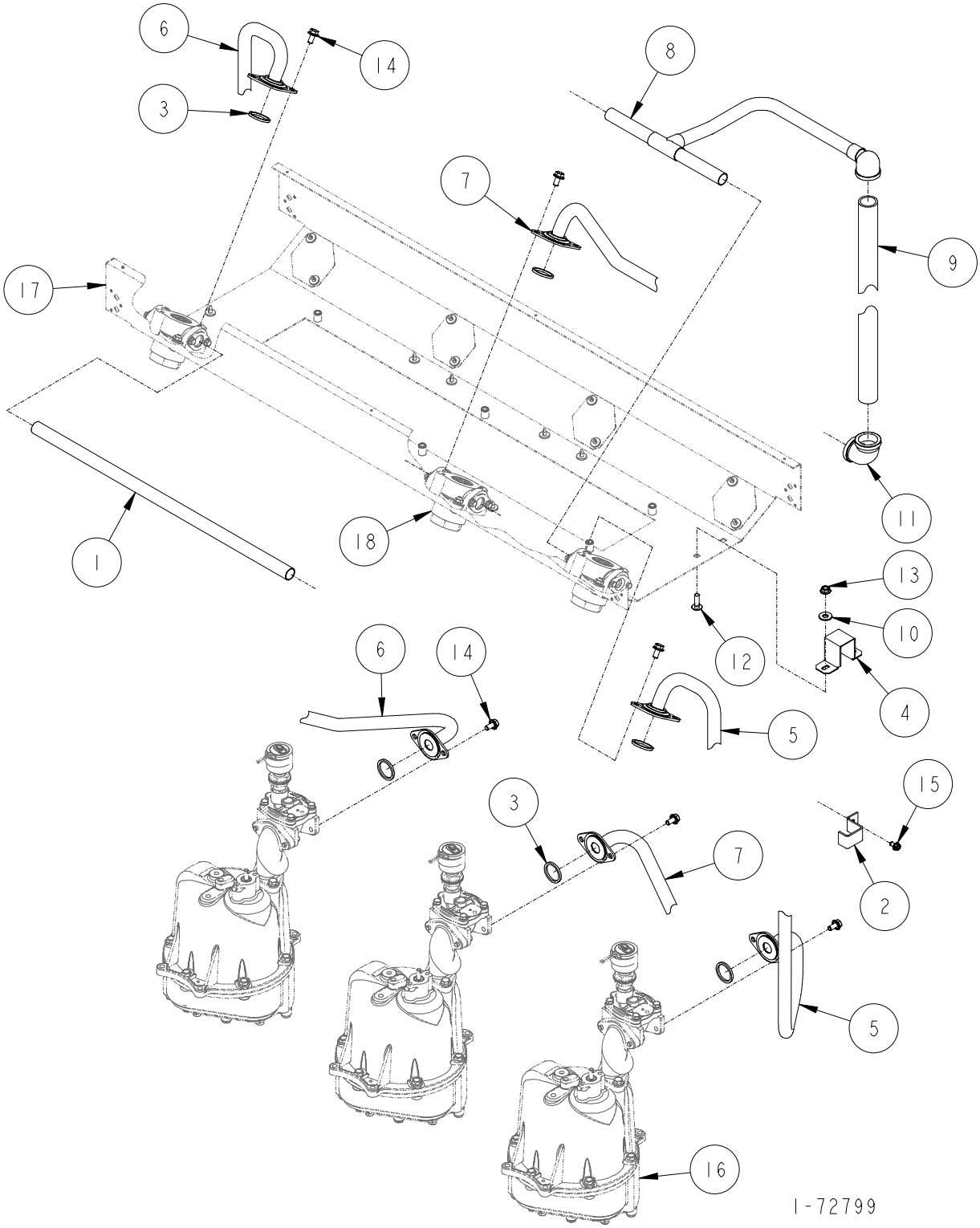

DISCHARGE ASSEMBLY

H413C-IV & Full (Balance) &H413D-IV & Full (Balance)

ITEM NO.	PART NO.	DESCRIPTION
1	94-230486	Copper Tube Nipple
2	1-231856	Discharge Tube Bracket
3	13-313235	Gasket
4	1-321154	Down Pipe Bracket
5	1-422641	Fuel Discharge Tube
6	1-422642	Fuel Discharge Tube
7	1-422643	Fuel Discharge Tube
8	5-422689	Vapor Outlet Tube
9	335-50510	1-1/2" x 81-1/2" Long Pipe
10	03-50611	5/16 Plate Washer
11	06-51700	1" x 90° Elbow - Banded
12	39-52198	5/16-18 x 1" Long Carriage Bolt
13	02-54752	5/16-18 M-F Flange Whiz Lock Nut
14	35-55132	5/16-18 x 5/8" Long M-F Flange Whiz Lock Screw
15	69-55392	1/4 x 1/2" Long Hex Washer Head Tapping Screw
16	For parts call out of Meter & Hydraulics Assembly see 72726.	
17	For parts call out of Chassis Assembly see 72724.	
18	For parts call out of Outlet Adapter Assembly see 72752.	

Reference for Tokheim internal use only:

321170	Fuel Tube Hydraulic Assembly
422624	Raceway Assembly

1-72799

4
B

DISCHARGE ASSEMBLY

H413C-EB-IV & FUll (BALANCE)

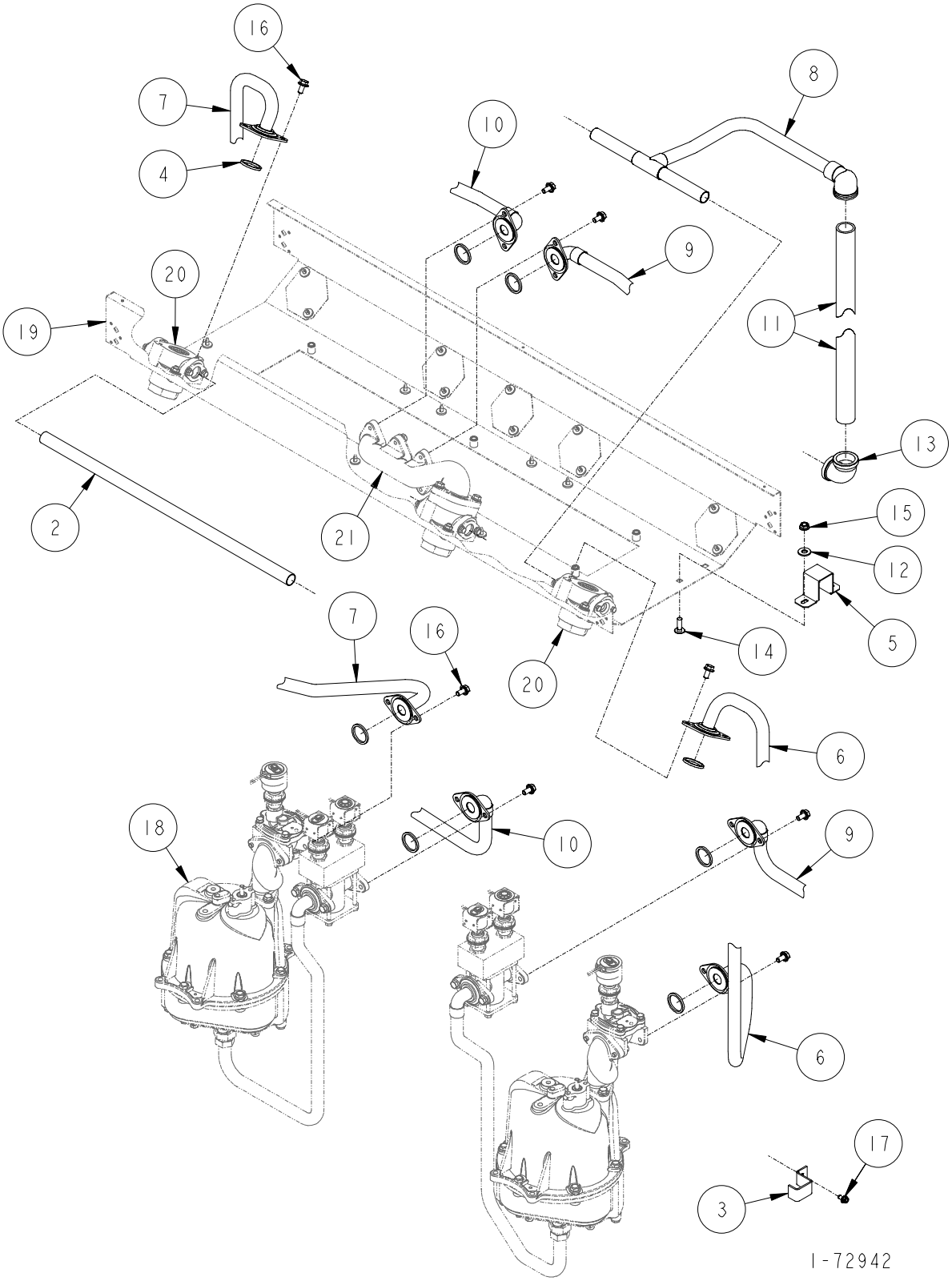

DISCHARGE ASSEMBLY

H413C-EB-IV & FULL (BALANCE)

ITEM NO.	PART NO.	DESCRIPTION
1	7-230486	Copper Tube Nipple
2	94-230486	Copper Tube Nipple
3	1-231856	Discharge Tube Bracket
4	13-313235	Gasket
5	1-321154	Down Pipe Bracket
6	1-422641	Fuel Discharge Tube
7	1-422642	Fuel Discharge Tube
8	5-422689	Vapor Outlet Tube
9	1-422707	Fuel Discharge Tube
10	1-422706	Fuel Discharge Tube
11	335-50510	1-1/2" x 81-1/2" Long Pipe
12	03-50611	5/16 Plate Washer
13	06-51700	1" x 90° Elbow - Banded
14	39-52198	5/16-18 x 1" Long Carriage Bolt
15	02-54752	5/16-18 M-F Flange Whiz Lock Nut
16	35-55132	5/16-18 x 5/8" Long M-F Flange Whiz Lock Screw
17	69-55392	1/4 x 1/2" Long Hex Washer Head Tapping Screw
18	For parts call out of Meter & Hydraulics Assembly see 72729.	
19	For parts call out of Chassis Assembly see 72724.	
20	For parts call out of Outlet Adapter Assembly see 72752.	
21	For parts call out of Outlet Adapter Assembly see 72760.	

Reference for Tokheim internal use only:

321170	Fuel Tube Hydraulic Assembly
422624	Raceway Assembly

1-72942

4
B

DISCHARGE ASSEMBLY

H414C-IV & Full (Balance) & H414D-IV & Full (Balance)

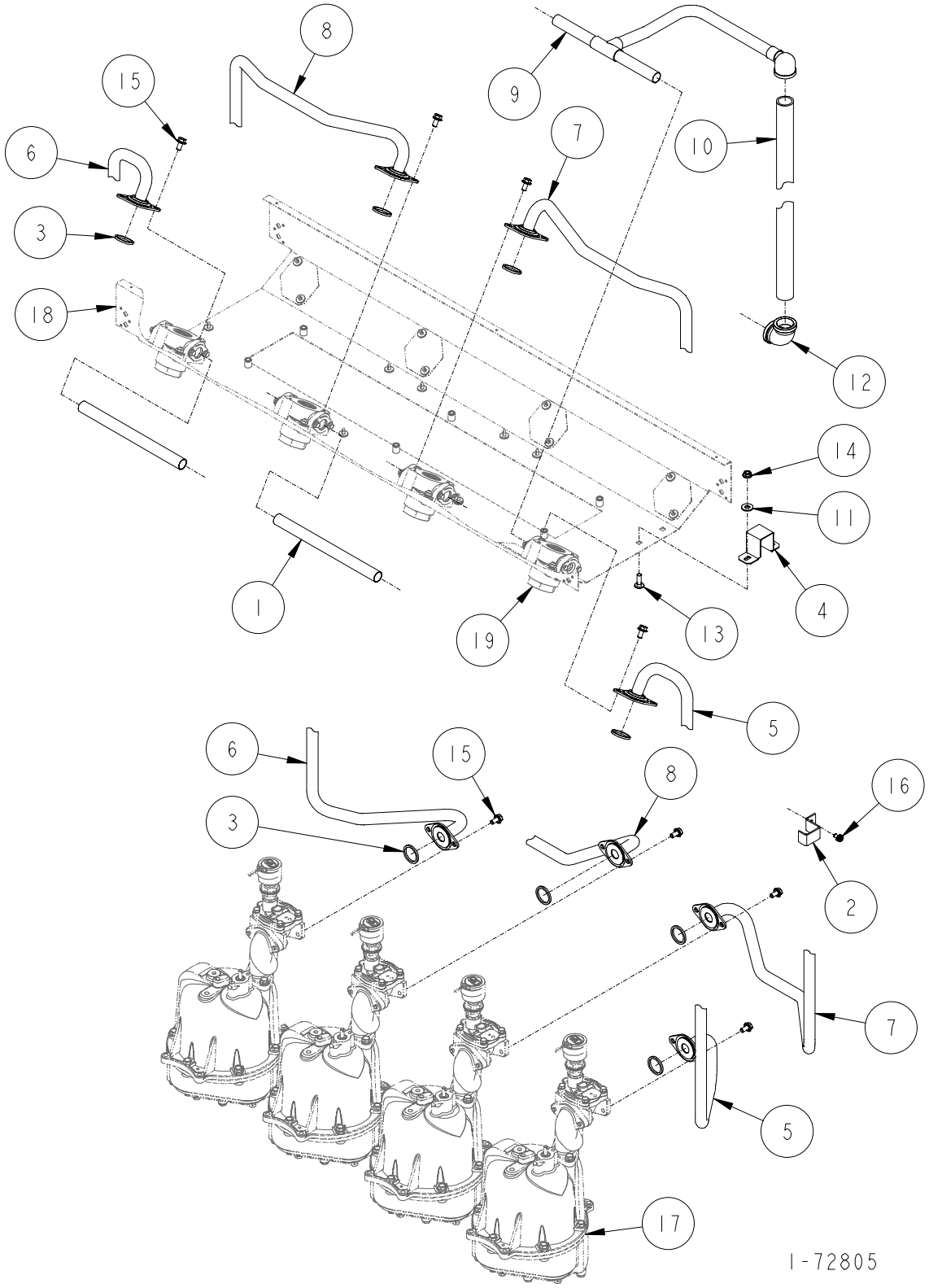

DISCHARGE ASSEMBLY

H414C-IV & Full (Balance) & H414D-IV & Full (Balance)

ITEM NO.	PART NO.	DESCRIPTION
1	7-230486	Copper Tube Nipple
2	1-231856	Discharge Tube Bracket
3	13-313235	Gasket
4	1-321154	Down Pipe Bracket
5	1-422641	Fuel Discharge Tube
6	1-422642	Fuel Discharge Tube
7	1-422694	Fuel Discharge Tube
8	1-422695	Fuel Discharge Tube
9	5-422689	Vapor Outlet Tube
10	335-50510	1-1/2" x 81-1/2" Long Pipe
11	03-50611	5/16 Plate Washer
12	06-51700	1" x 90° Elbow - Banded
13	39-52198	5/16-18 x 1" Long Carriage Bolt
14	02-54752	5/16-18 M-F Flange Whiz Lock Nut
15	35-55132	5/16-18 x 5/8" Long M-F Flange Whiz Lock Screw
16	69-55392	1/4 x 1/2" Long Hex Washer Head Tapping Screw
17	For parts call out of Meter & Hydraulics Assembly see 72726.	
18	For parts call out of Chassis Assembly see 72724.	
19	For parts call out of Outlet Adapter Assembly see 72752.	

Reference for Tokheim internal use only:

321170	Fuel Tube Hydraulic Assembly
422624	Raceway Assembly

1-72805

4
B

This page reserved for future use.

This page reserved for future use.

DISCHARGE ASSEMBLY

H422C-IV & Full (Balance) & H422D-IV & Full (Balance)

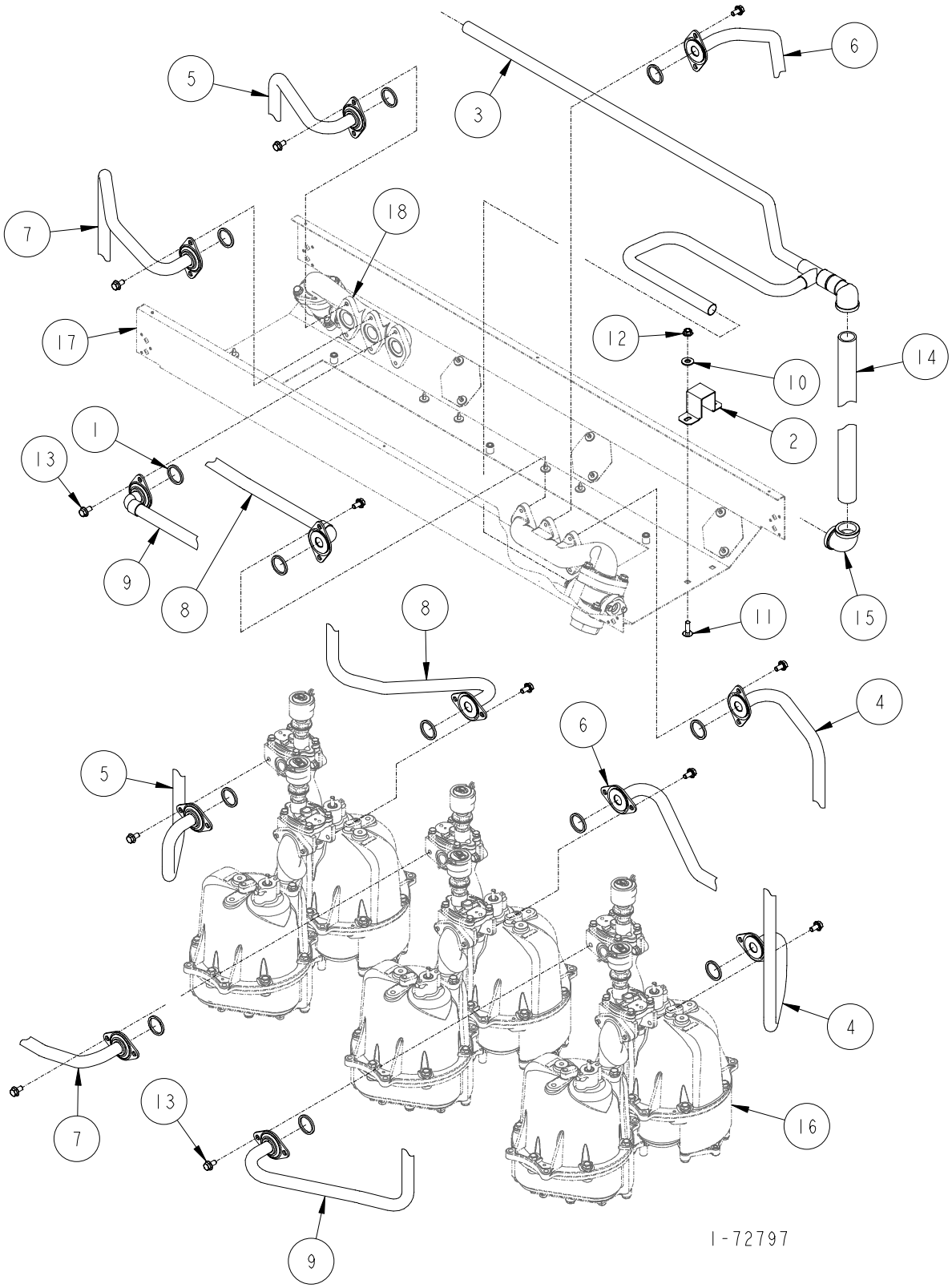

DISCHARGE ASSEMBLY

H422C-IV & Full (Balance) & H422D-IV & Full (Balance)

ITEM NO.	PART NO.	DESCRIPTION
1	13-313235	Gasket
2	1-321154	Down Pipe Bracket
3	4-422689	Vapor Outlet Tube
4	1-422729	Fuel Discharge Tube (H422C Side A)
5	1-422729	Fuel Discharge Tube (H422C Side B)
6	1-422730	Fuel Discharge Tube (H422C Side A)
7	1-422730	Fuel Discharge Tube (H422C Side B)
8	1-422731	Fuel Discharge Tube (H422C Side A)
9	1-422731	Fuel Discharge Tube (H422C Side B)
10	03-50611	5/16 Plate Washer
11	39-52198	5/16-18 x 1" Long Carriage Bolt
12	02-54752	5/16-18 M-F Flange Whiz Lock Nut
13	35-55132	5/16-18 x 5/8" Long M-F Flange Whiz Lock Screw
14	335-50510	1-1/2" x 81-1/2" Long Pipe
15	06-51700	1" x 90° Elbow - Banded
16	For parts call out of Meter & Hydraulics Assembly see 72726.	
17	For parts call out of Chassis Assembly see 72724.	
18	For parts call out of Outlet Adapter Assembly see 72760.	

Reference for Tokheim internal use only:

321170	Fuel Tube Hydraulic Assembly
422624	Raceway Assembly

1-72797

4
B

DISCHARGE ASSEMBLY

H422C-B3/5-IV & Full (Balance)

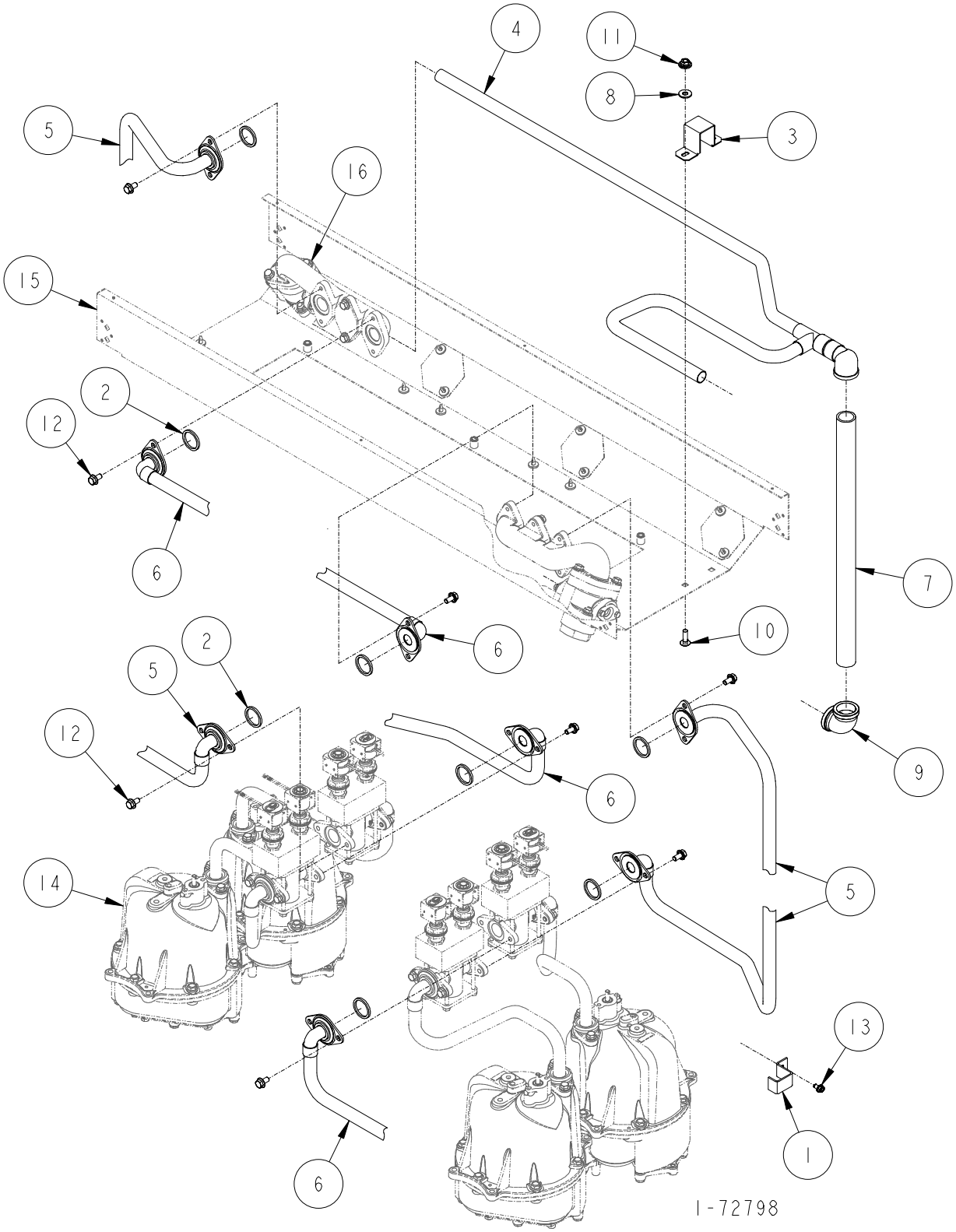

DISCHARGE ASSEMBLY

H422C-B3/5-IV & FULL (BALANCE)

ITEM NO.	PART NO.	DESCRIPTION
1	1-231856	Discharge Tube Bracket
2	13-313235	Gasket
3	1-321154	Down Pipe Bracket
4	1-422689	Vapor Outlet Tube
5	1-422732	Fuel Discharge Tube
6	1-422733	Fuel Discharge Tube
7	335-50510	1-1/2" x 81-1/2" Long Pipe
8	03-50611	5/16 Plate Washer
9	06-51700	1" x 90° Elbow - Banded
10	39-52198	5/16-18 x 1" Long Carriage Bolt
11	02-54752	5/16-18 M-F Flange Whiz Lock Nut
12	35-55132	5/16-18 x 5/8" Long M-F Flange Whiz Lock Screw
13	69-55392	1/4 x 1/2" Long Hex Washer Head Tapping Screw
14	For parts call out of Meter & Hydraulics Assembly see 72728.	
15	For parts call out of Chassis Assembly see 72724.	
16	For parts call out of Outlet Adapter Assembly see 72760.	

Reference for Tokheim internal use only:

321170	Fuel Tube Hydraulic Assembly
422624	Raceway Assembly

1-72798

4
B

DISCHARGE ASSEMBLY

H422C-B3/5MR-IV & Full (Balance)

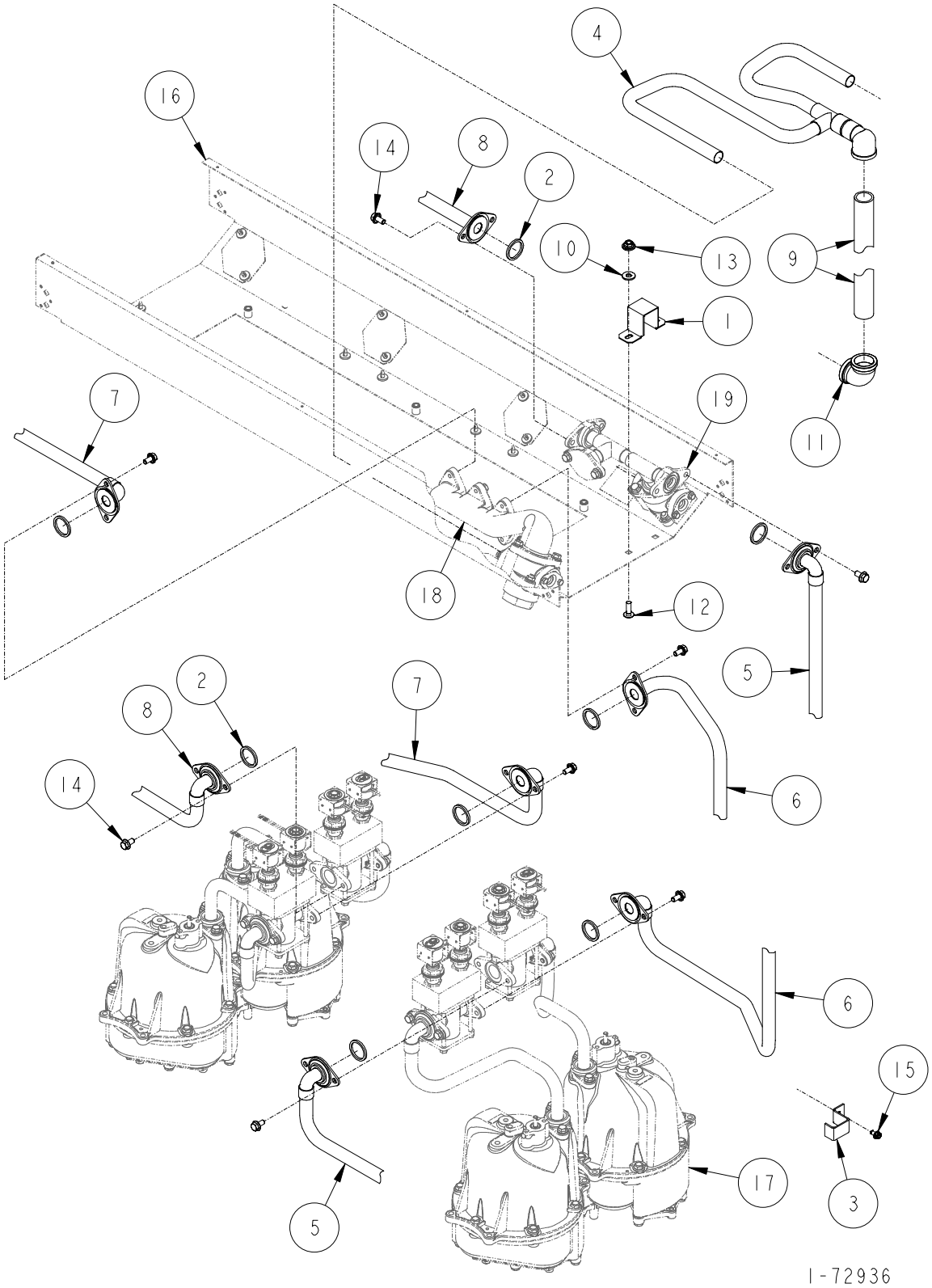

DISCHARGE ASSEMBLY

H422C-B3/5MR-IV & FULL (BALANCE)

ITEM NO.	PART NO.	DESCRIPTION
1	1-231856	Discharge Tube Bracket
2	13-313235	Gasket
3	1-321154	Down Pipe Bracket
4	8-422689	Vapor Outlet Tube
5	1-422732	Fuel Discharge Tube
6	1-422732	Fuel Discharge Tube
7	1-422733	Fuel Discharge Tube
8	1-422732	Fuel Discharge Tube
9	335-50510	1-1/2" x 81-1/2" Long Pipe
10	03-50611	5/16 Plate Washer
11	06-51700	1" x 90° Elbow - Banded
12	39-52198	5/16-18 x 1" Long Carriage Bolt
13	02-54752	5/16-18 M-F Flange Whiz Lock Nut
14	35-55132	5/16-18 x 5/8" Long M-F Flange Whiz Lock Screw
15	69-55392	1/4 x 1/2" Long Hex Washer Head Tapping Screw
16	For parts call out of Chassis Assembly see 72724.	
17	For parts call out of Meter & Hydraulics Assembly see 72728.	
18	For parts call out of Outlet Adapter Assembly see 72760.	
19	For parts call out of Outlet Adapter Assembly see 72819.	

Reference for Tokheim internal use only:

321170	Fuel Tube Hydraulic Assembly
422624	Raceway Assembly

1-72936

4
B

DISCHARGE ASSEMBLY

H424C-IV & Full (Balance) & H424D-IV & Full (Balance)

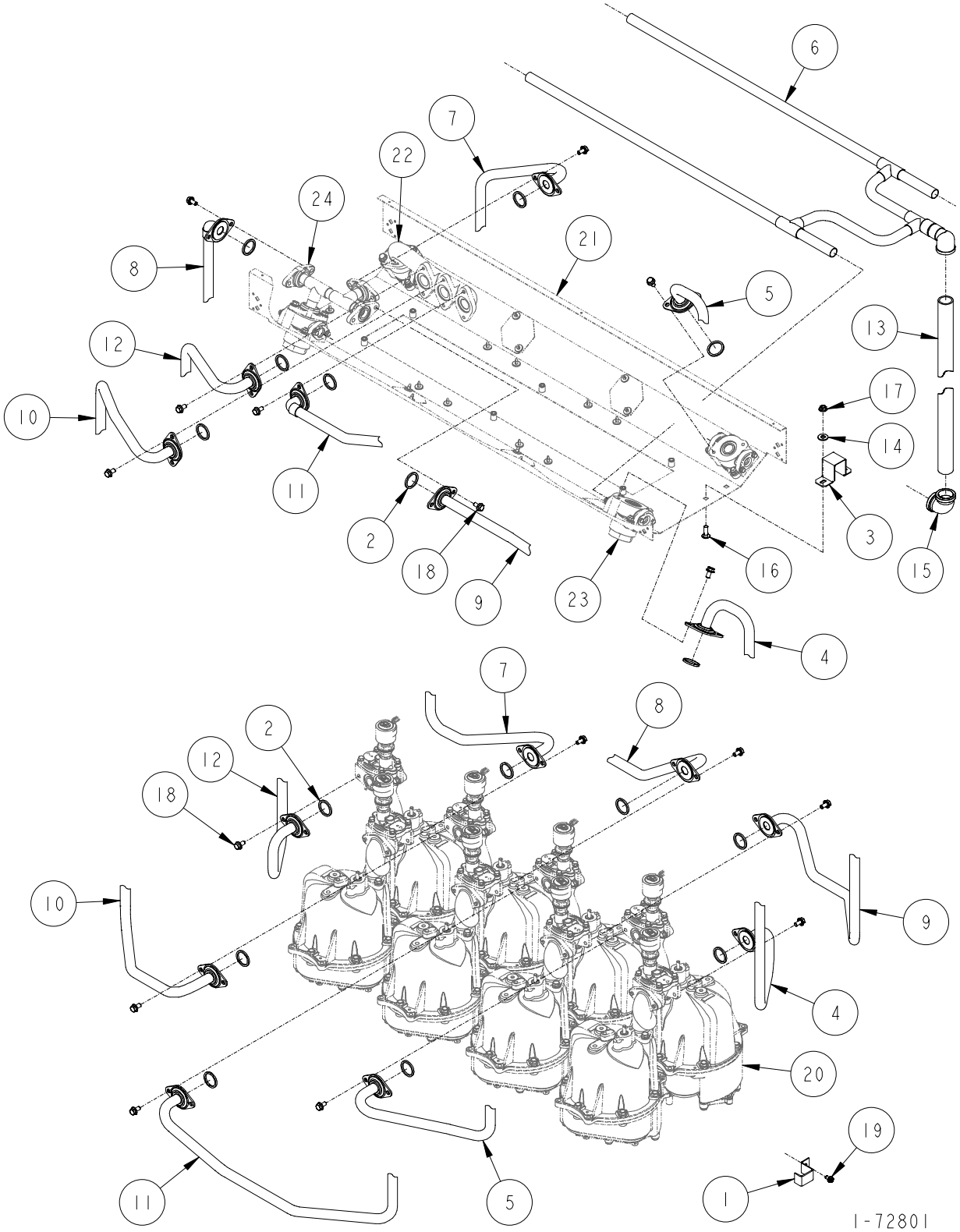

DISCHARGE ASSEMBLY

H424C-IV & Full (Balance) & H424D-IV & Full (Balance)

ITEM NO.	PART NO.	DESCRIPTION
1	1-231856	Discharge Tube Bracket
2	13-313235	Gasket
3	1-321154	Down Pipe Bracket
4	1-422641	Fuel Discharge Tube
5	1-422642	Fuel Discharge Tube
6	3-422689	Vapor Outlet Tube
7	1-422697	Fuel Discharge Tube
8	1-422698	Fuel Discharge Tube
9	1-422699	Fuel Discharge Tube
10	1-422700	Fuel Discharge Tube
11	1-422701	Fuel Discharge Tube
12	1-422729	Fuel Discharge Tube
13	335-50510	1-1/2" x 81-1/2" Long Pipe
14	03-50611	5/16 Plate Washer
15	06-51700	1" x 90° Elbow - Banded
16	39-52198	5/16-18 x 1" Long Carriage Bolt
17	02-54752	5/16-18 M-F Flange Whiz Lock Nut
18	35-55132	5/16-18 x 5/8" Long M-F Flange Whiz Lock Screw
19	69-55392	1/4 x 1/2" Long Hex Washer Head Tapping Screw
20	For parts call out of Meter & Hydraulics Assembly see 72726.	
21	For parts call out of Chassis Assembly see 72724.	
22	For parts call out of Outlet Adapter Assembly see 72760.	
23	For parts call out of Outlet Adapter Assembly see 72752.	
24	For parts call out of Outlet Adapter Assembly see 72819.	

Reference for Tokheim internal use only:

321170	Fuel Tube Hydraulic Assembly
422624	Raceway Assembly

1-72801

4
B

DISCHARGE ASSEMBLY

H424C-IN/FN & H424D-IN/FN

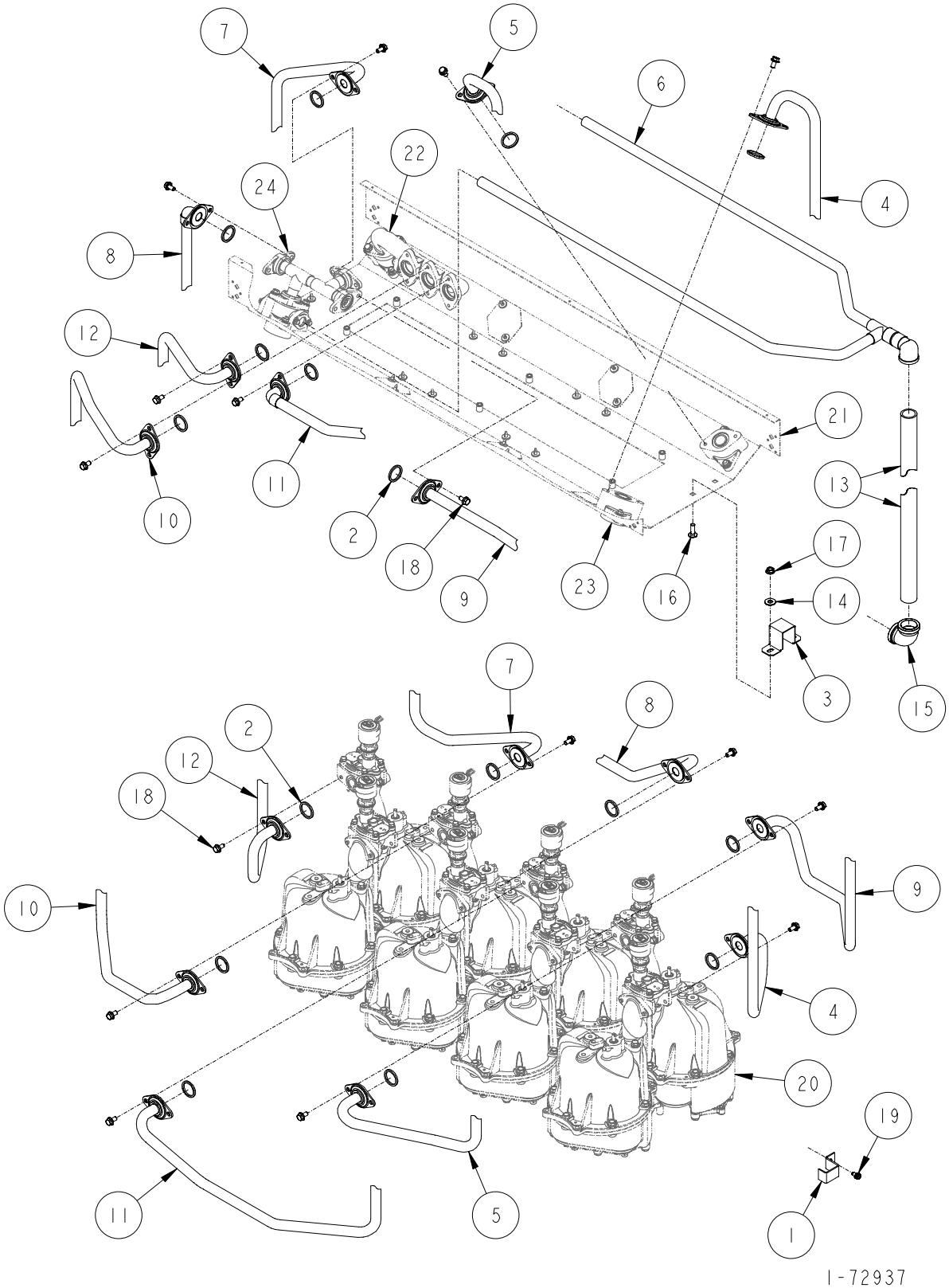

DISCHARGE ASSEMBLY

H424C-IN/FN & H424D-IN/FN

ITEM NO.	PART NO.	DESCRIPTION
1	1-231856	Discharge Tube Bracket
2	13-313235	Gasket
3	1-321154	Down Pipe Bracket
4	1-422641	Fuel Discharge Tube
5	1-422642	Fuel Discharge Tube
6	6-422689	Vapor Outlet Tube
7	1-422697	Fuel Discharge Tube
8	1-422698	Fuel Discharge Tube
9	1-422699	Fuel Discharge Tube
10	1-422700	Fuel Discharge Tube
11	1-422701	Fuel Discharge Tube
12	1-422729	Fuel Discharge Tube
13	335-50510	1-1/2" x 81-1/2" Long Pipe
14	03-50611	5/16 Plate Washer
15	06-51700	1" x 90° Elbow - Banded
16	39-52198	5/16-18 x 1" Long Carriage Bolt
17	02-54752	5/16-18 M-F Flange Whiz Lock Nut
18	35-55132	5/16-18 x 5/8" Long M-F Flange Whiz Lock Screw
19	69-55392	1/4 x 1/2" Long Hex Washer Head Tapping Screw
20	For parts call out of Meter & Hydraulics Assembly see 72726.	
21	For parts call out of Chassis Assembly see 72724.	
22	For parts call out of Outlet Adapter Assembly see 72760.	
23	For parts call out of Outlet Adapter Assembly see 72763.	
24	For parts call out of Outlet Adapter Assembly see 72819.	

Reference for Tokheim internal use only:

321170	Fuel Tube Hydraulic Assembly
422624	Raceway Assembly

1-72937

4
B

DISCHARGE ASSEMBLY

H424C-TLIN/FN & H424D-TLIN/FN

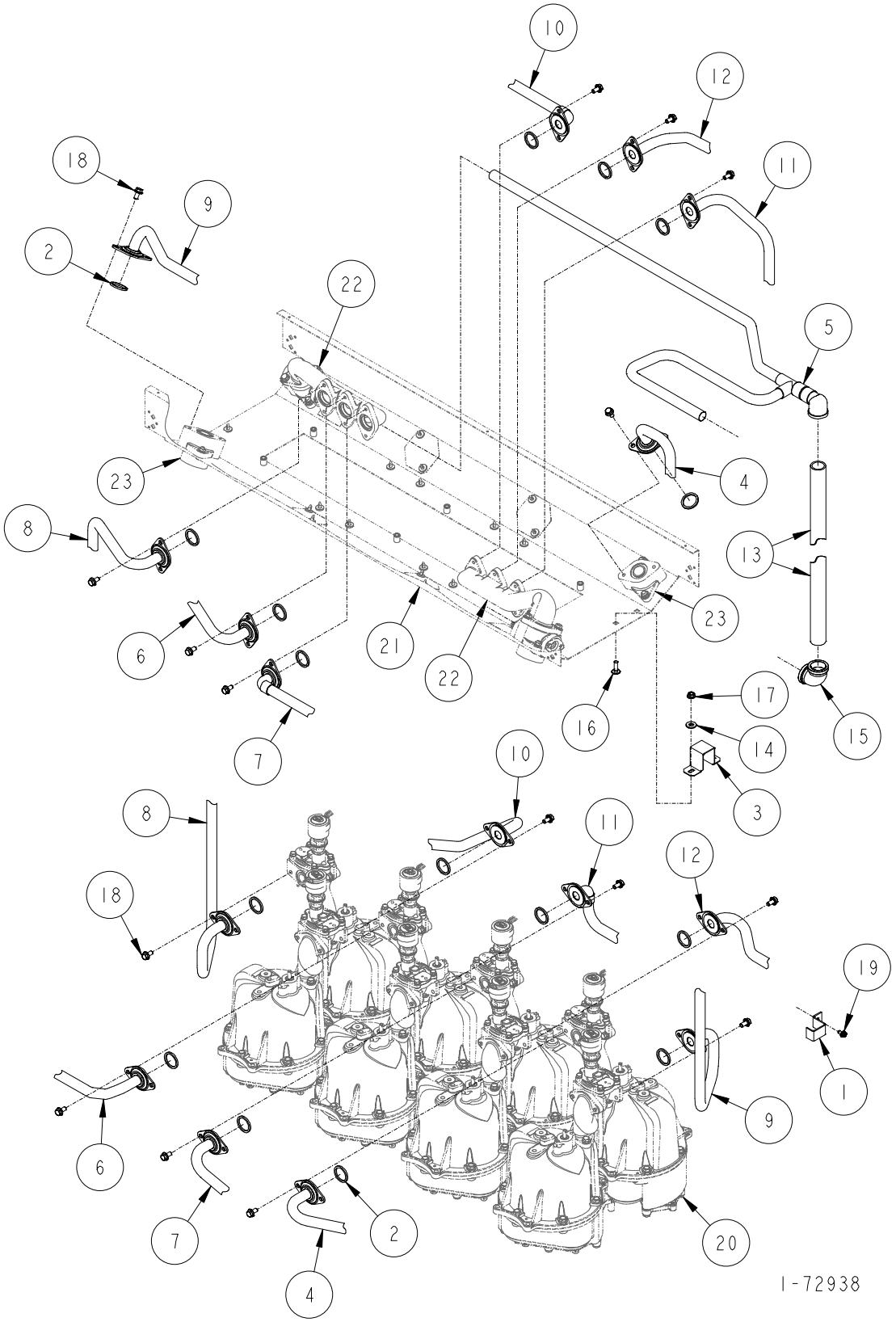

DISCHARGE ASSEMBLY

H424C-TLIN/FN & H424D-TLIN/FN

ITEM NO.	PART NO.	DESCRIPTION
1	1-231856	Discharge Tube Bracket
2	13-313235	Gasket
3	1-321154	Down Pipe Bracket
4	1-422642	Fuel Discharge Tube
5	4-422689	Vapor Outlet Tube
6	1-422700	Fuel Discharge Tube
7	1-422701	Fuel Discharge Tube
8	1-422729	Fuel Discharge Tube
9	1-422832	Fuel Discharge Tube
10	1-422854	Fuel Discharge Tube
11	1-422855	Fuel Discharge Tube
12	1-422856	Fuel Discharge Tube
13	335-50510	1-1/2" x 81-1/2" Long Pipe
14	03-50611	5/16 Plate Washer
15	06-51700	1" x 90° Elbow - Banded
16	39-52198	5/16-18 x 1" Long Carriage Bolt
17	02-54752	5/16-18 M-F Flange Whiz Lock Nut
18	35-55132	5/16-18 x 5/8" Long M-F Flange Whiz Lock Screw
19	69-55392	1/4 x 1/2" Long Hex Washer Head Tapping Screw
20	For parts call out of Meter & Hydraulics Assembly see 72726.	
21	For parts call out of Chassis Assembly see 72724.	
22	For parts call out of Outlet Adapter Assembly see 72760.	
23	For parts call out of Outlet Adapter Assembly see 72763.	

Reference for Tokheim internal use only:

321170	Fuel Tube Hydraulic Assembly
422624	Raceway Assembly

1-72938

4
B

DISCHARGE ASSEMBLY

H424C-TRIN/FN & H424D-TRIN/FN

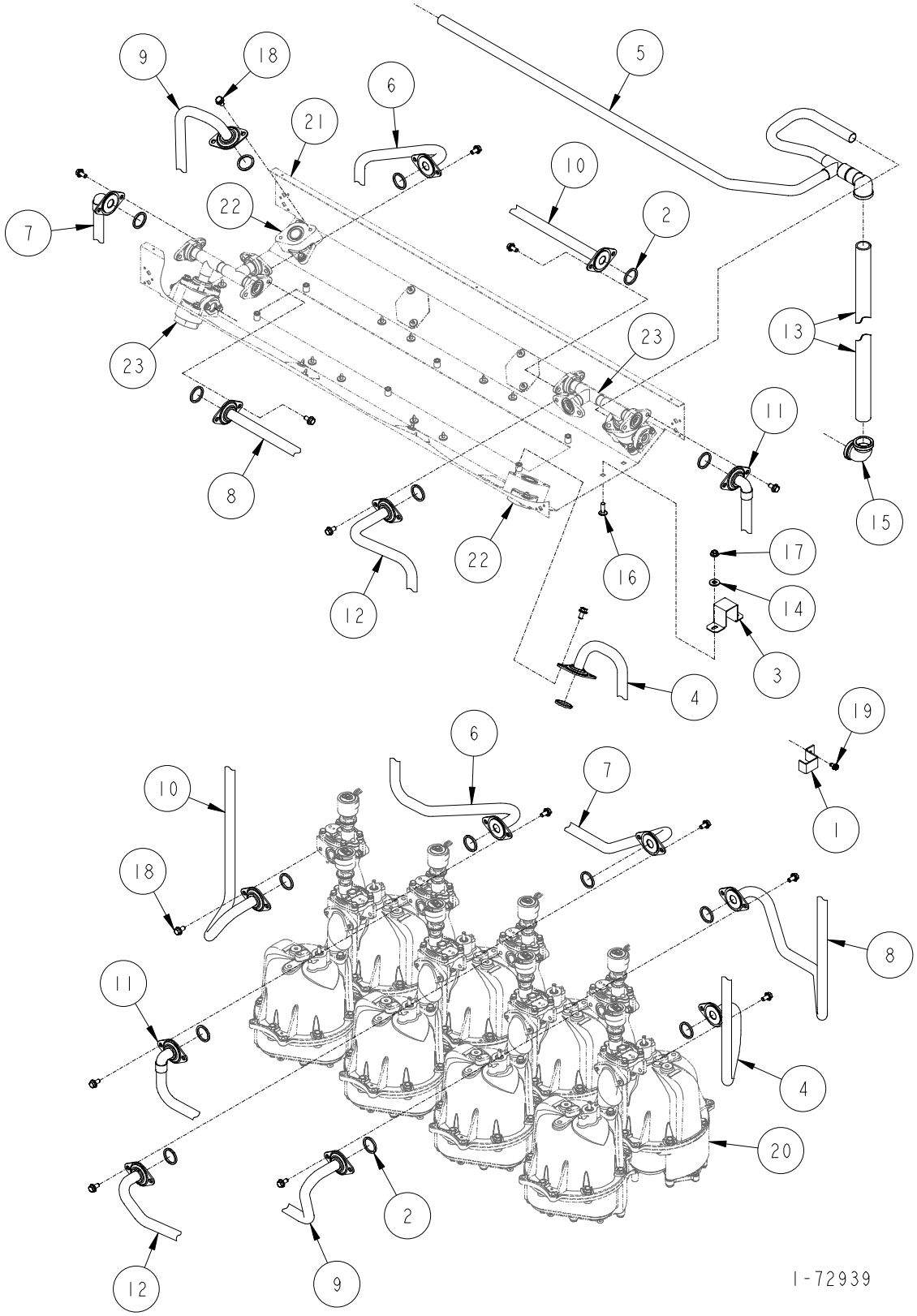

DISCHARGE ASSEMBLY

H424C-TRIN/FN & H424D-TRIN/FN

ITEM NO.	PART NO.	DESCRIPTION
1	1-231856	Discharge Tube Bracket
2	13-313235	Gasket
3	1-321154	Down Pipe Bracket
4	1-422641	Fuel Discharge Tube
5	7-422689	Vapor Outlet Tube
6	1-422697	Fuel Discharge Tube
7	1-422698	Fuel Discharge Tube
8	1-422699	Fuel Discharge Tube
9	1-422975	Fuel Discharge Tube
10	1-422976	Fuel Discharge Tube
11	1-422977	Fuel Discharge Tube
12	1-422978	Fuel Discharge Tube
13	335-50510	1-1/2" x 81-1/2" Long Pipe
14	03-50611	5/16 Plate Washer
15	06-51700	1" x 90° Elbow - Banded
16	39-52198	5/16-18 x 1" Long Carriage Bolt
17	02-54752	5/16-18 M-F Flange Whiz Lock Nut
18	35-55132	5/16-18 x 5/8" Long M-F Flange Whiz Lock Screw
19	69-55392	1/4 x 1/2" Long Hex Washer Head Tapping Screw
20	For parts call out of Meter & Hydraulics Assembly see 72726.	
21	For parts call out of Chassis Assembly see 72724.	
22	For parts call out of Outlet Adapter Assembly see 72763.	
23	For parts call out of Outlet Adapter Assembly see 72819.	

Reference for Tokheim internal use only:

321170	Fuel Tube Hydraulic Assembly
422624	Raceway Assembly

1-72939

4
B

DISCHARGE ASSEMBLY

H424C-B3/4-IN/FN

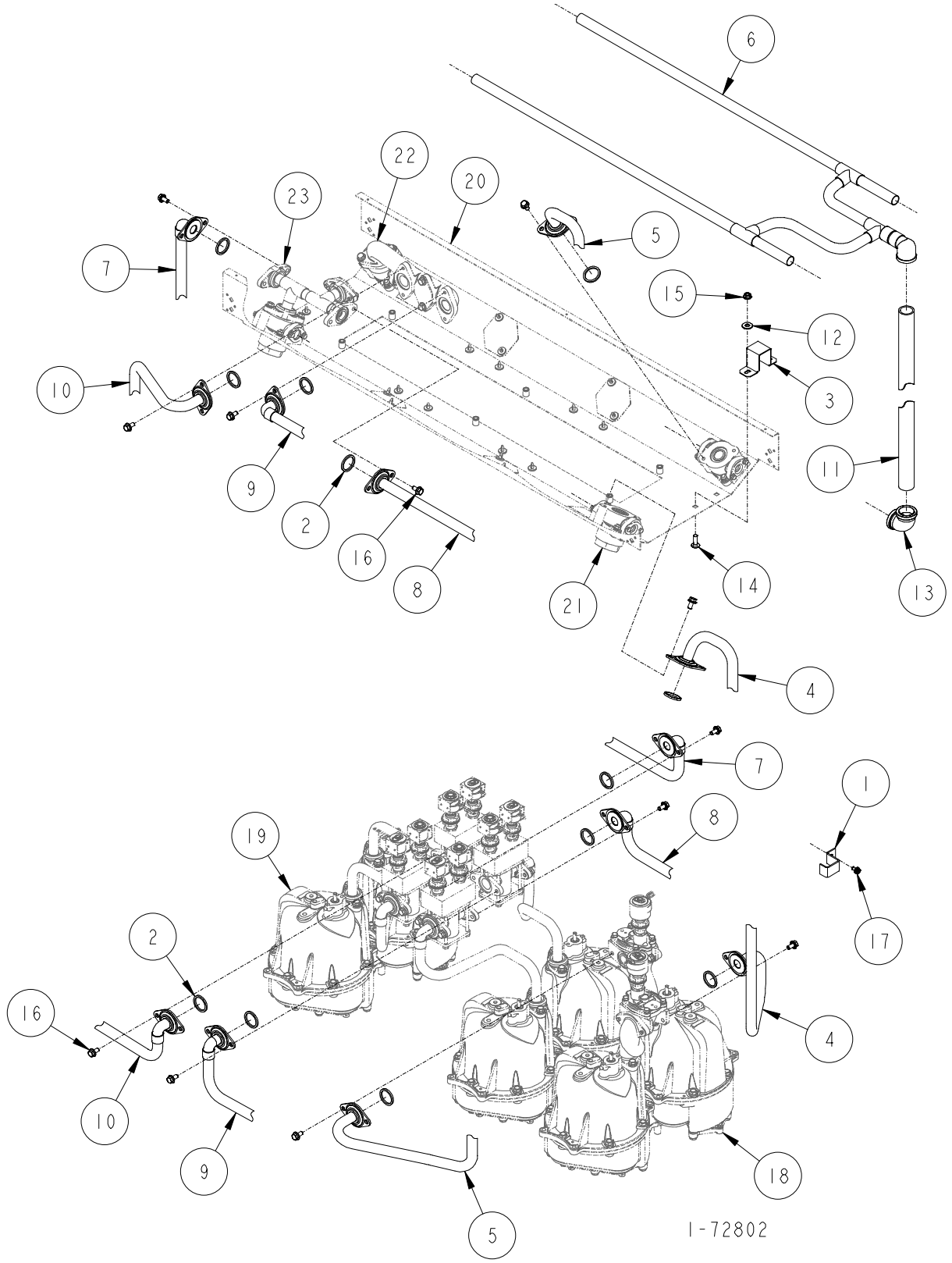

DISCHARGE ASSEMBLY

H424C-B3/4-IN/FN

ITEM NO.	PART NO.	DESCRIPTION
1	1-231856	Discharge Tube Bracket
2	13-313235	Gasket
3	1-321154	Down Pipe Bracket
4	1-422641	Fuel Discharge Tube
5	1-422642	Fuel Discharge Tube
6	3-422689	Vapor Outlet Tube
7	1-422702	Fuel Discharge Tube
8	1-422703	Fuel Discharge Tube
9	1-422704	Fuel Discharge Tube
10	1-422732	Fuel Discharge Tube
11	335-50510	1-1/2" x 81-1/2" Long Pipe
12	03-50611	5/16" Plate Washer
13	06-51700	1" x 90° Elbow - Banded
14	39-52198	5/16-18 x 1" Long Carriage Bolt
15	02-54752	5/16-18 M-F Flange Whiz Lock Nut
16	35-55132	5/16-18 x 5/8" Long M-F Flange Whiz Lock Screw
17	69-55392	1/4 x 1/2" Long Hex Washer Head Tapping Screw
18	For parts call out of Meter & Hydraulics Assembly see 72726.	
19	For parts call out of Meter & Hydraulics Assembly see 72728.	
20	For parts call out of Chassis Assembly see 72724.	
21	For parts call out of Outlet Adapter Assembly see 72752.	
22	For parts call out of Outlet Adapter Assembly see 72760.	
23	For parts call out of Outlet Adapter Assembly see 72819.	

Reference for Tokheim internal use only:

321170	Fuel Tube Hydraulic Assembly
422624	Raceway Assembly

1-72802

4
B

DISCHARGE ASSEMBLY

H424C-B3/4TL-IN/FN

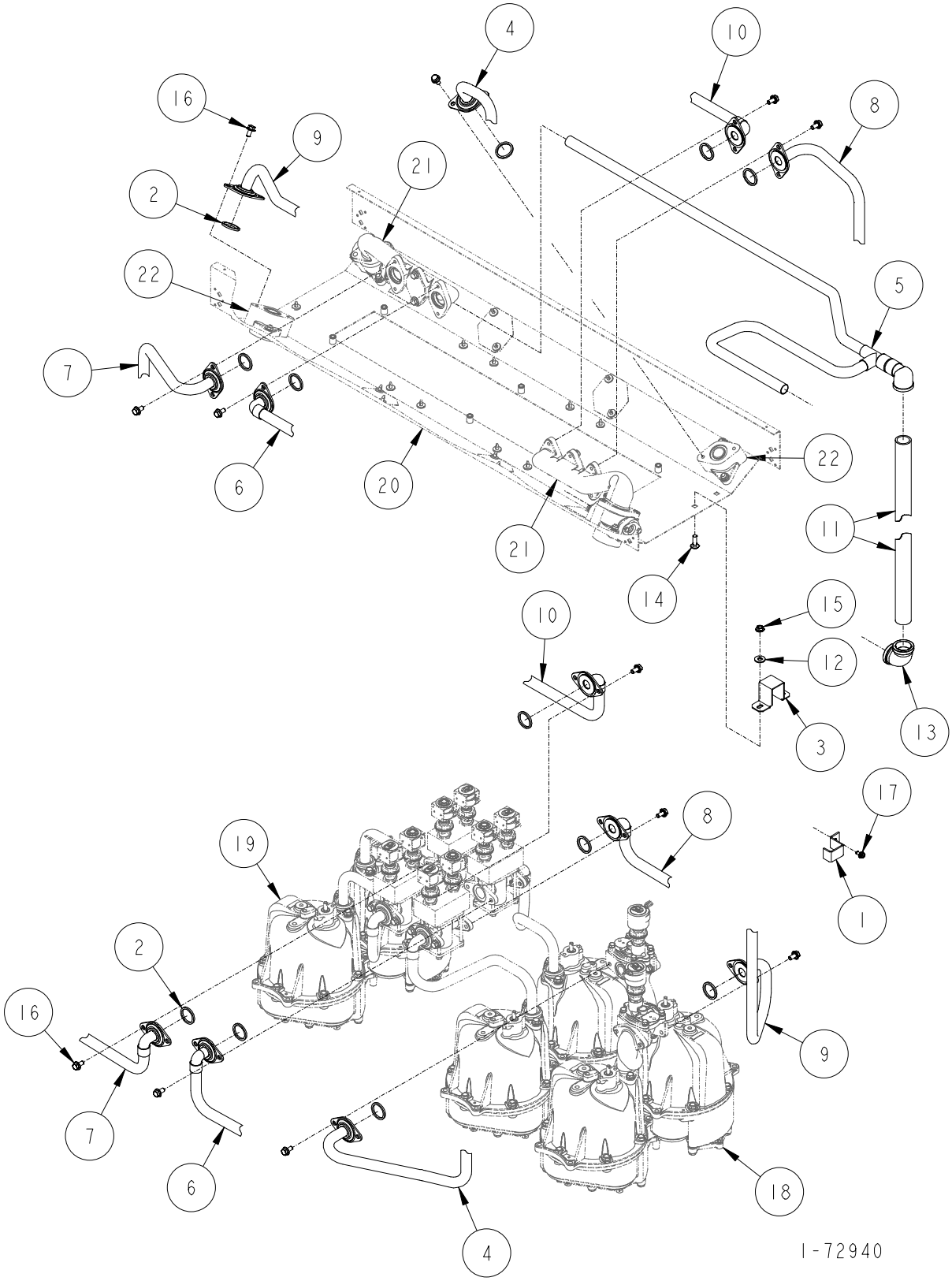

DISCHARGE ASSEMBLY

H424C-B3/4TL-IN/FN

ITEM NO.	PART NO.	DESCRIPTION
1	1-231856	Discharge Tube Bracket
2	13-313235	Gasket
3	1-321154	Down Pipe Bracket
4	1-422642	Fuel Discharge Tube
5	4-422689	Vapor Outlet Tube
6	1-422704	Fuel Discharge Tube
7	1-422732	Fuel Discharge Tube
8	1-422831	Fuel Discharge Tube
9	1-422832	Fuel Discharge Tube
10	1-422833	Fuel Discharge Tube
11	335-50510	1-1/2" x 81-1/2" Long Pipe
12	03-50611	5/16" Plate Washer
13	06-51700	1" x 90° Elbow - Banded
14	39-52198	5/16-18 x 1" Long Carriage Bolt
15	02-54752	5/16-18 M-F Flange Whiz Lock Nut
16	35-55132	5/16-18 x 5/8" Long M-F Flange Whiz Lock Screw
17	69-55392	1/4 x 1/2" Long Hex Washer Head Tapping Screw
18	For parts call out of Meter & Hydraulics Assembly see 72726.	
19	For parts call out of Meter & Hydraulics Assembly see 72728.	
20	For parts call out of Chassis Assembly see 72724.	
21	For parts call out of Outlet Adapter Assembly see 72760.	
22	For parts call out of Outlet Adapter Assembly see 72763.	

Reference for Tokheim internal use only:

321170	Fuel Tube Hydraulic Assembly
422624	Raceway Assembly

1-72940

4
B

DISCHARGE ASSEMBLY

H424C-B3/4TR-IN/FN

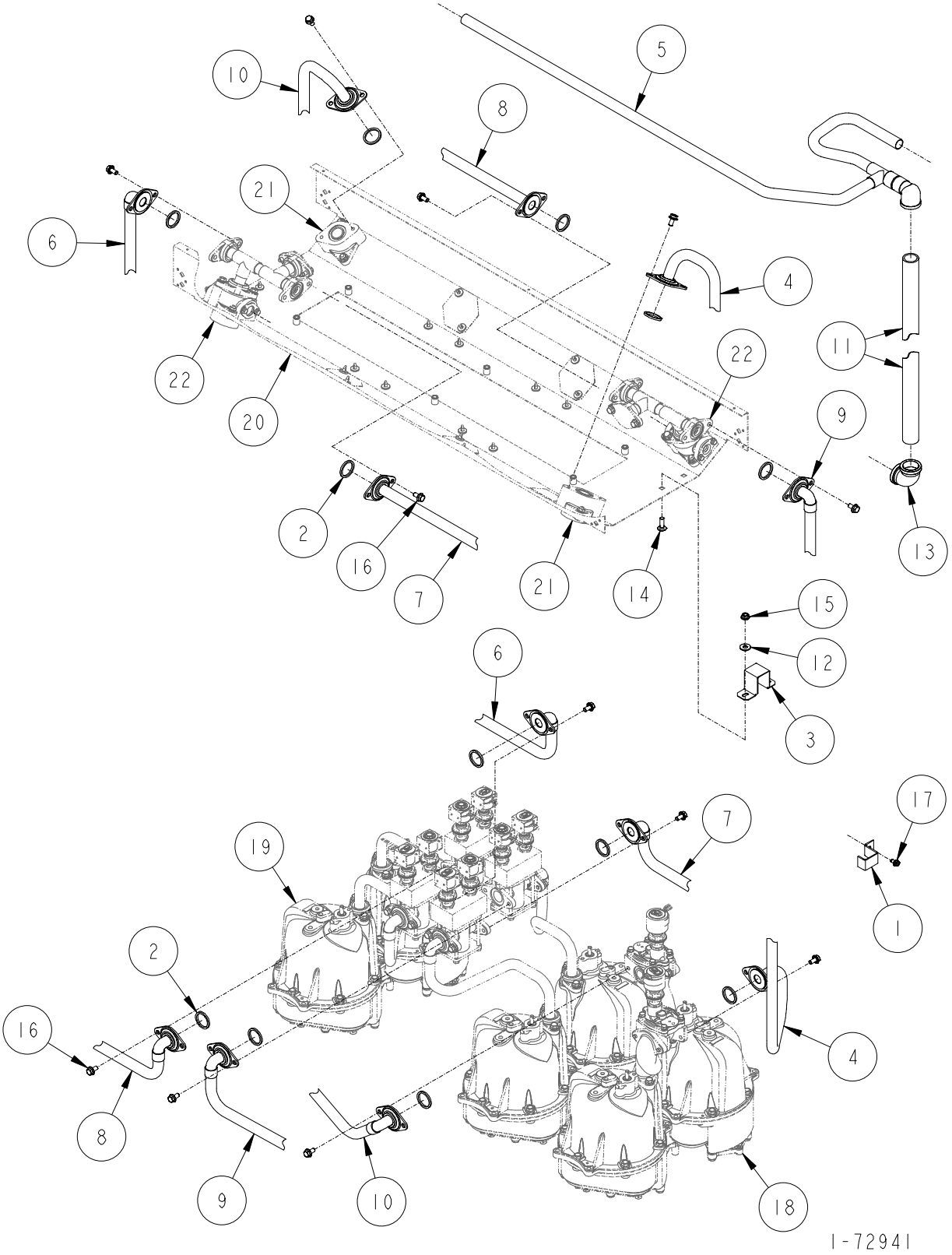

DISCHARGE ASSEMBLY

H424C-B3/4TR-IN/FN

ITEM NO.	PART NO.	DESCRIPTION
1	1-231856	Discharge Tube Bracket
2	13-313235	Gasket
3	1-321154	Down Pipe Bracket
4	1-422641	Fuel Discharge Tube
5	7-422689	Vapor Outlet Tube
6	1-422702	Fuel Discharge Tube
7	1-422703	Fuel Discharge Tube
8	1-422844	Fuel Discharge Tube
9	1-422845	Fuel Discharge Tube
10	1-422881	Fuel Discharge Tube
11	335-50510	1-1/2" x 81-1/2" Long Pipe
12	03-50611	5/16" Plate Washer
13	06-51700	1" x 90° Elbow - Banded
14	39-52198	5/16-18 x 1" Long Carriage Bolt
15	02-54752	5/16-18 M-F Flange Whiz Lock Nut
16	35-55132	5/16-18 x 5/8" Long M-F Flange Whiz Lock Screw
17	69-55392	1/4 x 1/2" Long Hex Washer Head Tapping Screw
18	For parts call out of Meter & Hydraulics Assembly see 72726.	
19	For parts call out of Meter & Hydraulics Assembly see 72728.	
20	For parts call out of Chassis Assembly see 72724.	
21	For parts call out of Outlet Adapter Assembly see 72763.	
22	For parts call out of Outlet Adapter Assembly see 72819.	

Reference for Tokheim internal use only:

321170	Fuel Tube Hydraulic Assembly
422624	Raceway Assembly

1-72941

4
B

DISCHARGE ASSEMBLY

H424C-B3/4+DEISEL-IV & Full (Balance)

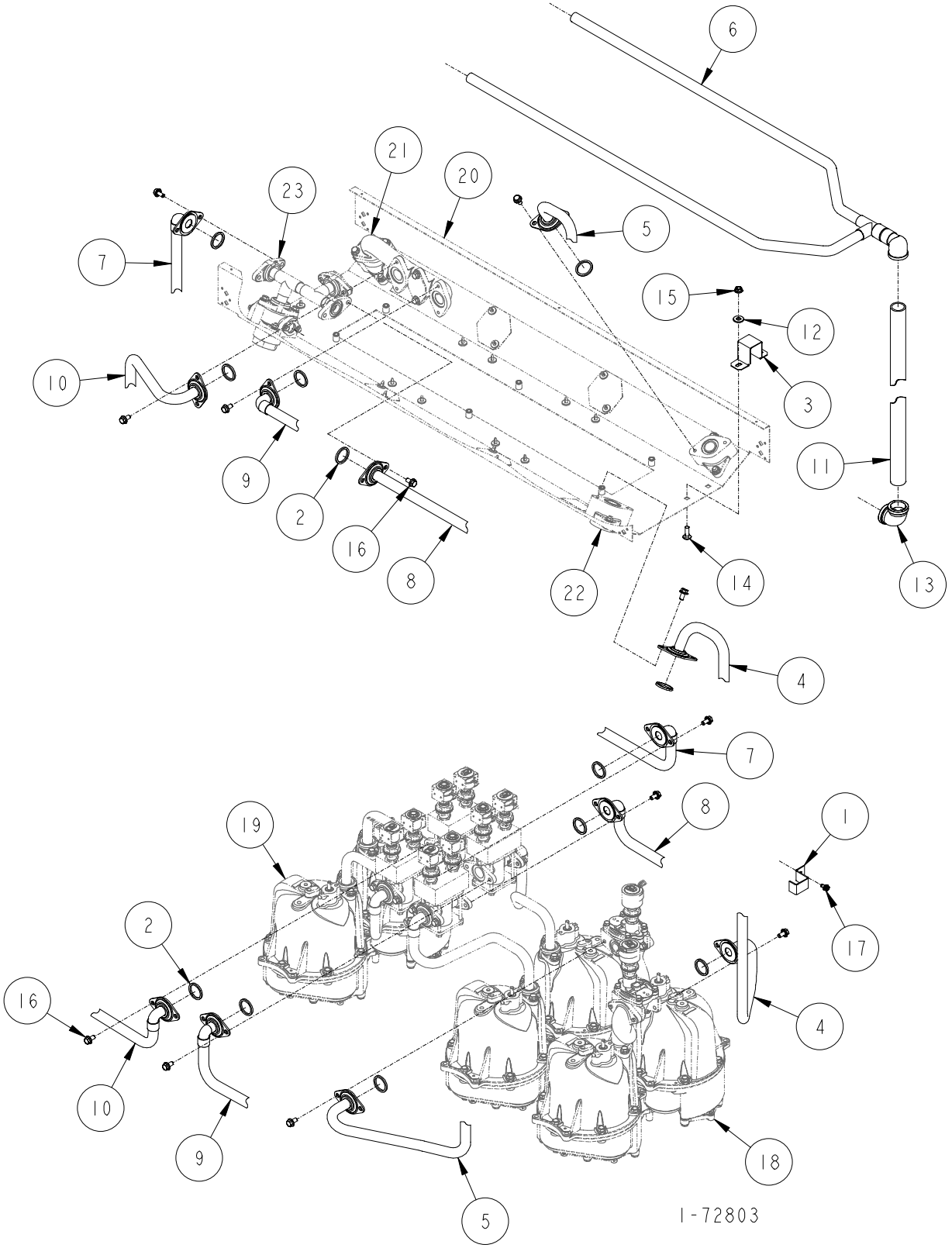

DISCHARGE ASSEMBLY

H424C-B3/4+DEISEL-IV & FULL (BALANCE)

ITEM NO.	PART NO.	DESCRIPTION
1	1-231856	Discharge Tube Bracket
2	13-313235	Gasket
3	1-321154	Down Pipe Bracket
4	1-422641	Fuel Discharge Tube
5	1-422642	Fuel Discharge Tube
6	6-422689	Vapor Outlet Tube
7	1-422702	Fuel Discharge Tube
8	1-422703	Fuel Discharge Tube
9	1-422704	Fuel Discharge Tube
10	1-422732	Fuel Discharge Tube
11	335-50510	1-1/2" x 81-1/2" Long Pipe
12	03-50611	5/16" Plate Washer
13	06-51700	1" x 90° Elbow - Banded
14	39-52198	5/16-18 x 1" Long Carriage Bolt
15	02-54752	5/16-18 M-F Flange Whiz Lock Nut
16	35-55132	5/16-18 x 5/8" Long M-F Flange Whiz Lock Screw
17	69-55392	1/4 x 1/2" Long Hex Washer Head Tapping Screw
18	For parts call out of Meter & Hydraulics Assembly see 72726.	
19	For parts call out of Meter & Hydraulics Assembly see 72728.	
20	For parts call out of Chassis Assembly see 72724.	
21	For parts call out of Outlet Adapter Assembly see 72760.	
22	For parts call out of Outlet Adapter Assembly see 72763.	
23	For parts call out of Outlet Adapter Assembly see 72819.	

Reference for Tokheim internal use only:

321170	Fuel Tube Hydraulic Assembly
422624	Raceway Assembly

1-72803

4
B

DISCHARGE ASSEMBLY

H426C-IV & Full (Balance) & H426D-IV & Full (Balance)

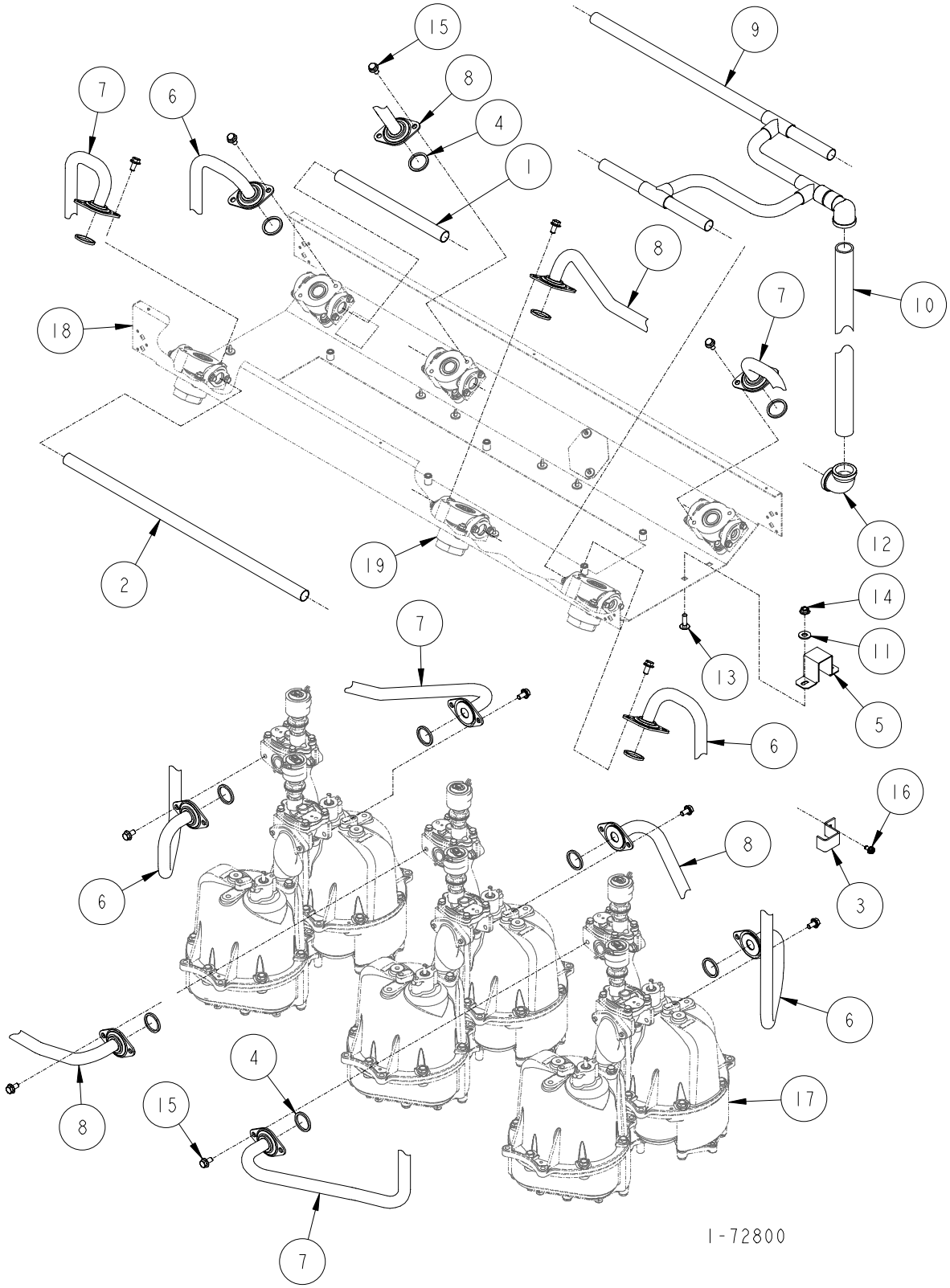

DISCHARGE ASSEMBLY

H426C-IV & Full (Balance) & H426D-IV & Full (Balance)

ITEM NO.	PART NO.	DESCRIPTION
1	7-230486	Copper Tube Nipple
2	94-230486	Copper Tube Nipple
3	1-231856	Discharge Tube Bracket
4	13-313235	Gasket
5	1-321154	Down Pipe Bracket
6	1-422641	Fuel Discharge Tube
7	1-422642	Fuel Discharge Tube
8	1-422643	Fuel Discharge Tube
9	2-422689	Vapor Outlet Tube
10	335-50510	1-1/2" x 81-1/2" Long Pipe
11	03-50611	5/16 Plate Washer
12	06-51700	1" x 90° Elbow - Banded
13	39-52198	5/16-18 x 1" Long Carriage Bolt
14	02-54752	5/16-18 M-F Flange Whiz Lock Nut
15	35-55132	5/16-18 x 5/8" Long M-F Flange Whiz Lock Screw
16	69-55392	1/4 x 1/2" Long Hex Washer Head Tapping Screw
17	For parts call out of Meter & Hydraulics Assembly see 72726.	
18	For parts call out of Chassis Assembly see 72724.	
19	For parts call out of Outlet Adapter Assembly see 72752.	

Reference for Tokheim internal use only:

321170	Fuel Tube Hydraulic Assembly
422624	Raceway Assembly

1-72800

4
B

DISCHARGE ASSEMBLY
H426C-EB-IV & FULL (BALANCE)

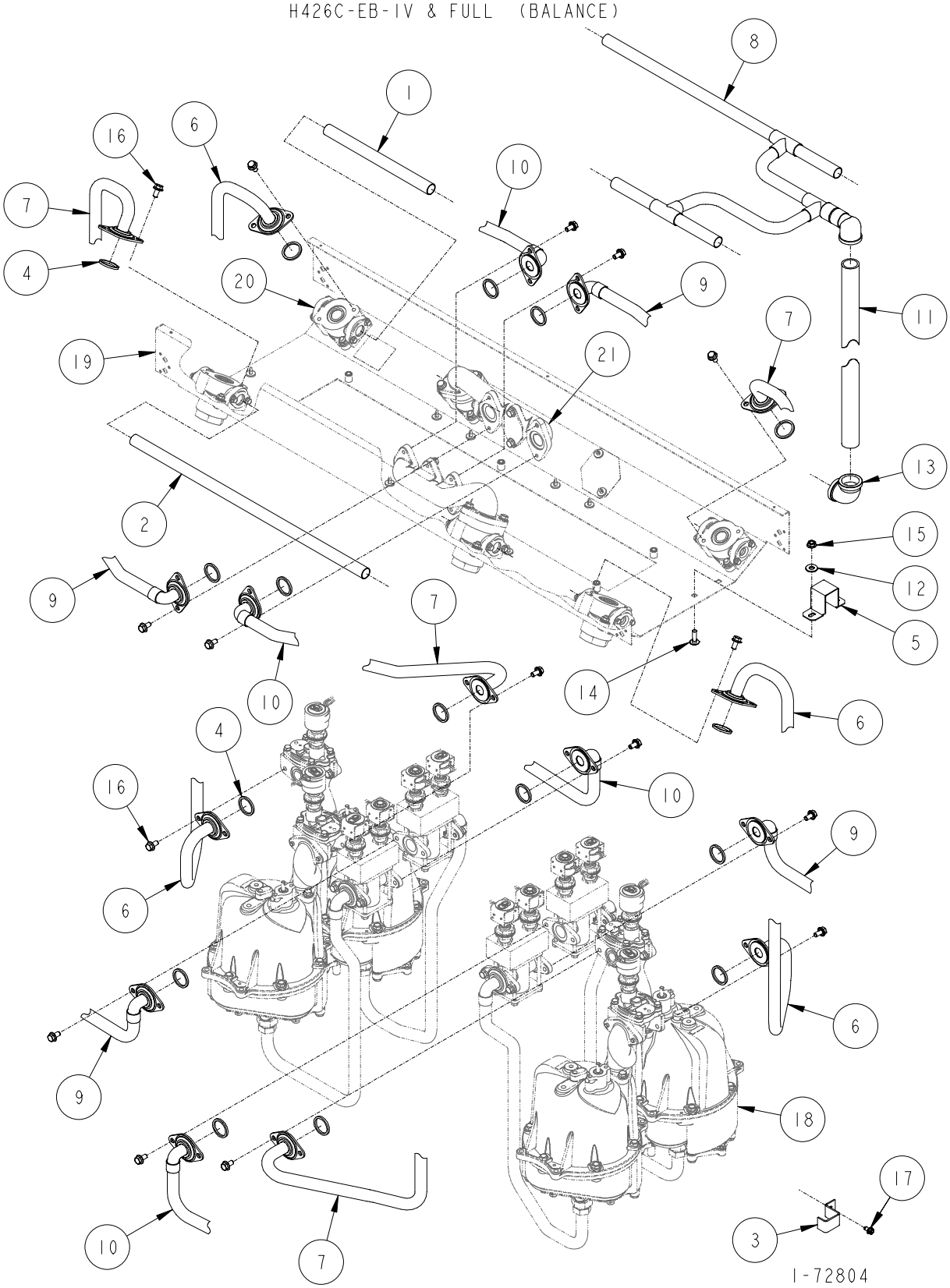

DISCHARGE ASSEMBLY

H426C-EB-IV & FULL (BALANCE)

ITEM NO.	PART NO.	DESCRIPTION
1	7-230486	Copper Tube Nipple
2	94-230486	Copper Tube Nipple
3	1-231856	Discharge Tube Bracket
4	13-313235	Gasket
5	1-321154	Down Pipe Bracket
6	1-422641	Fuel Discharge Tube
7	1-422642	Fuel Discharge Tube
8	2-422689	Vapor Outlet Tube
9	1-422707	Fuel Discharge Tube
10	1-422706	Fuel Discharge Tube
11	335-50510	1-1/2" x 81-1/2" Long Pipe
12	03-50611	5/16 Plate Washer
13	06-51700	1" x 90° Elbow - Banded
14	39-52198	5/16-18 x 1" Long Carriage Bolt
15	02-54752	5/16-18 M-F Flange Whiz Lock Nut
16	35-55132	5/16-18 x 5/8" Long M-F Flange Whiz Lock Screw
17	69-55392	1/4 x 1/2" Long Hex Washer Head Tapping Screw
18	For parts call out of Meter & Hydraulics Assembly see 72729.	
19	For parts call out of Chassis Assembly see 72724.	
20	For parts call out of Outlet Adapter Assembly see 72752.	
21	For parts call out of Outlet Adapter Assembly see 72760.	

Reference for Tokheim internal use only:

321170	Fuel Tube Hydraulic Assembly
422624	Raceway Assembly

1-72804

4
B

DISCHARGE ASSEMBLY

H428C-IV & Full (Balance) & H428D-IV & Full (Balance)

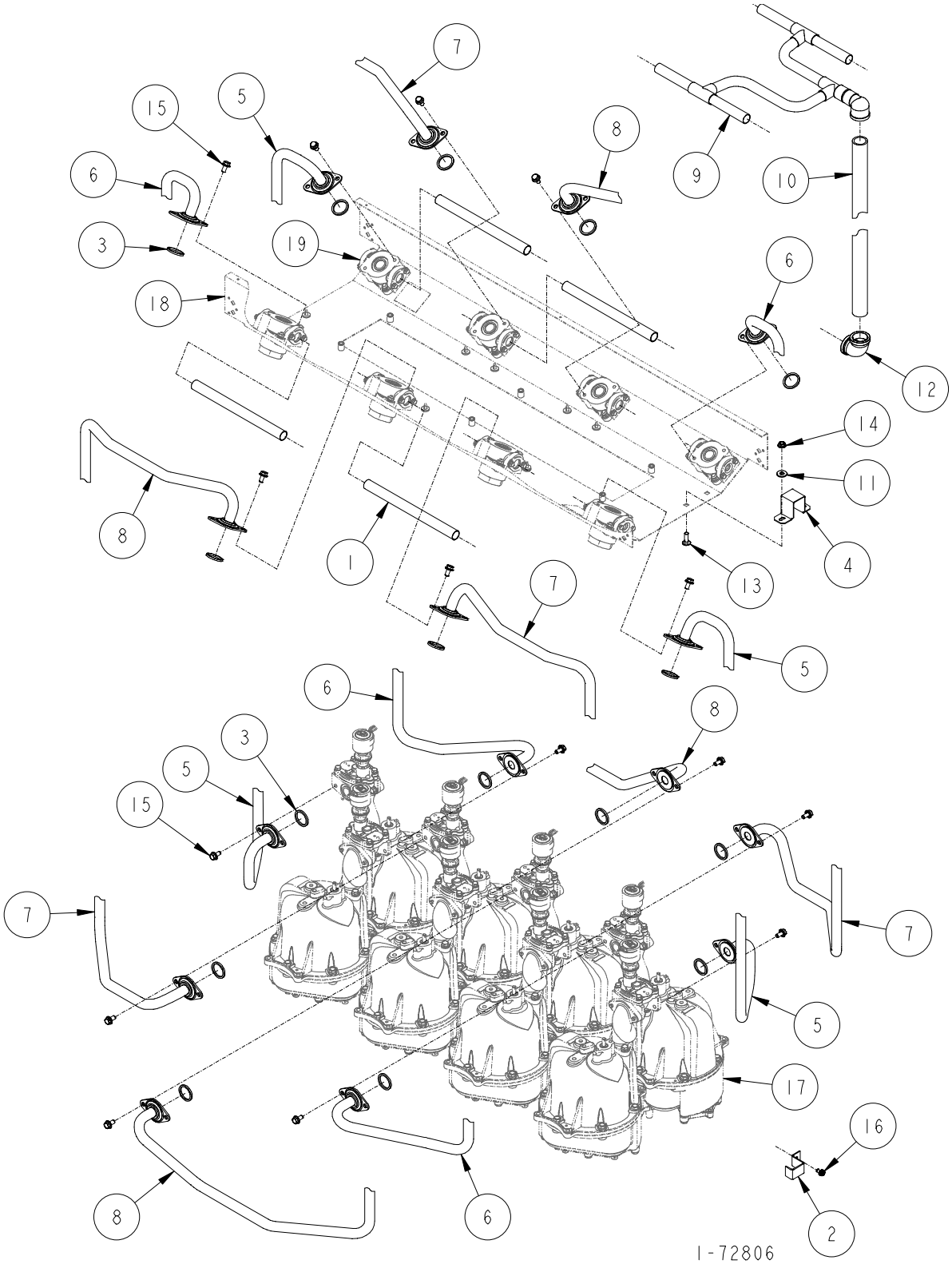

DISCHARGE ASSEMBLY

H428C-IV & Full (Balance) & H428D-IV & Full (Balance)

ITEM NO.	PART NO.	DESCRIPTION
1	7-230486	Copper Tube Nipple
2	1-231856	Discharge Tube Bracket
3	13-313235	Gasket
4	1-321154	Down Pipe Bracket
5	1-422641	Fuel Discharge Tube
6	1-422642	Fuel Discharge Tube
7	1-422694	Fuel Discharge Tube
8	1-422695	Fuel Discharge Tube
9	1-422689	Vapor Outlet Tube
10	335-50510	1-1/2" x 81-1/2" Long Pipe
11	03-50611	5/16 Plate Washer
12	06-51700	1" x 90° Elbow - Banded
13	39-52198	5/16-18 x 1" Long Carriage Bolt
14	02-54752	5/16-18 M-F Flange Whiz Lock Nut
15	35-55132	5/16-18 x 5/8" Long M-F Flange Whiz Lock Screw
16	69-55392	1/4 x 1/2" Long Hex Washer Head Tapping Screw
17	For parts call out of Meter & Hydraulics Assembly see 72726.	
18	For parts call out of Chassis Assembly see 72724.	
19	For parts call out of Outlet Adapter Assembly see 72752.	

Reference for Tokheim internal use only:

321170	Fuel Tube Hydraulic Assembly
422624	Raceway Assembly

1-72806

4
B

DISCHARGE ASSEMBLY
H428C-EB-IV & FULL (BALANCE)

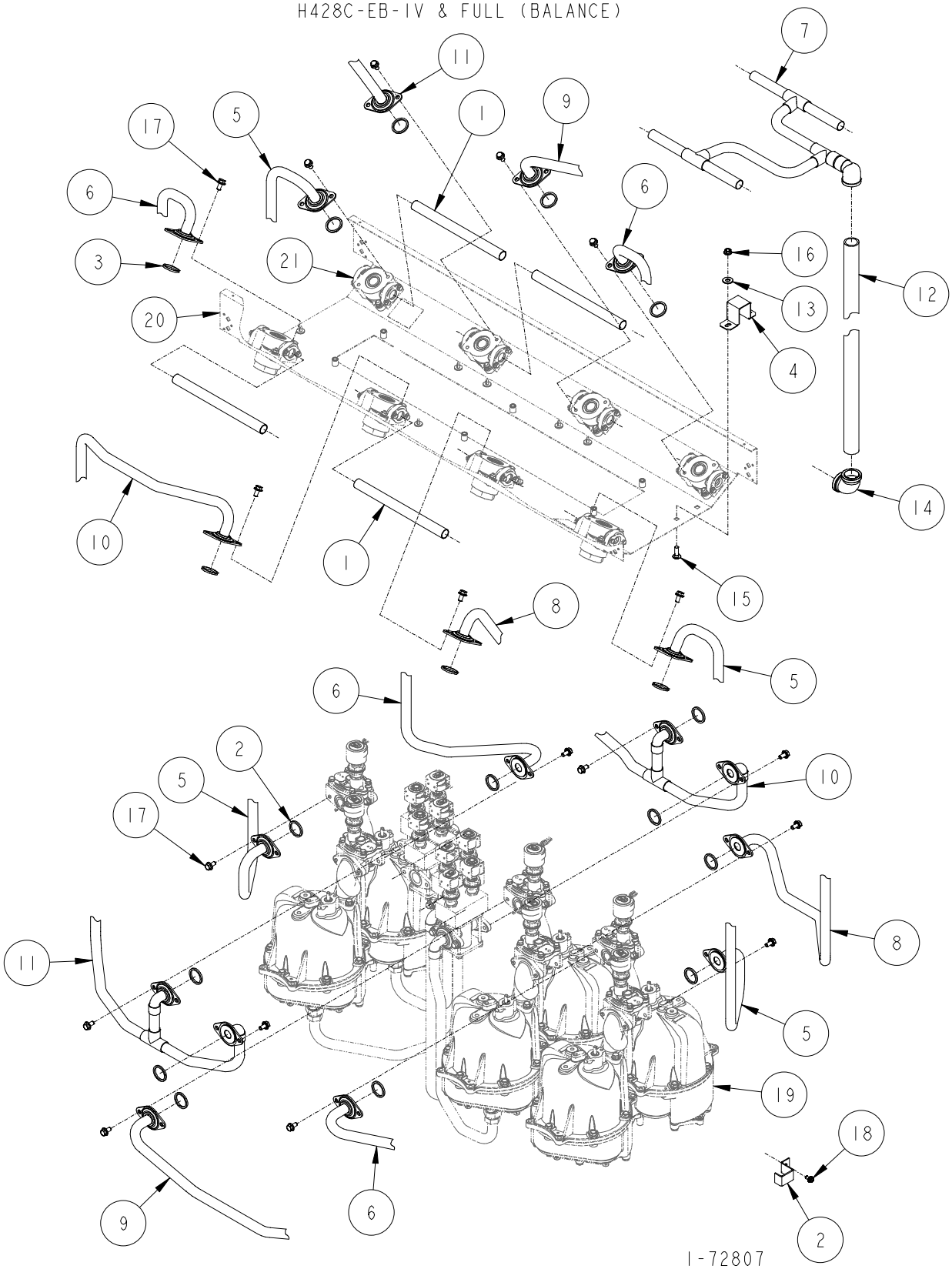

DISCHARGE ASSEMBLY

H428C-EB-IV & FULL (BALANCE)

ITEM NO.	PART NO.	DESCRIPTION
1	7-230486	Copper Tube Nipple
2	1-231856	Discharge Tube Bracket
3	13-313235	Gasket
4	1-321154	Down Pipe Bracket
5	1-422641	Fuel Discharge Tube
6	1-422642	Fuel Discharge Tube
7	1-422689	Vapor Outlet Tube
8	1-422694	Fuel Discharge Tube
9	1-422720	Fuel Discharge Tube
10	1-422721	Fuel Discharge Tube
11	1-422722	Fuel Discharge Tube
12	335-50510	1-1/2" x 81-1/2" Long Pipe
13	03-50611	5/16 Plate Washer
14	06-51700	1" x 90° Elbow - Banded
15	39-52198	5/16-18 x 1" Long Carriage Bolt
16	02-54752	5/16-18 M-F Flange Whiz Lock Nut
17	35-55132	5/16-18 x 5/8" Long M-F Flange Whiz Lock Screw
18	69-55392	1/4 x 1/2" Long Hex Washer Head Tapping Screw
19	For parts call out of Meter & Hydraulics Assembly see 72726.	
20	For parts call out of Chassis Assembly see 72724.	
21	For parts call out of Outlet Adapter Assembly see 72752.	

Reference for Tokheim internal use only:

321170	Fuel Tube Hydraulic Assembly
422624	Raceway Assembly

1-72807

4
B

SUCTION VAPOR ASSEMBLY

INTERIM & FULL (BALANCE)

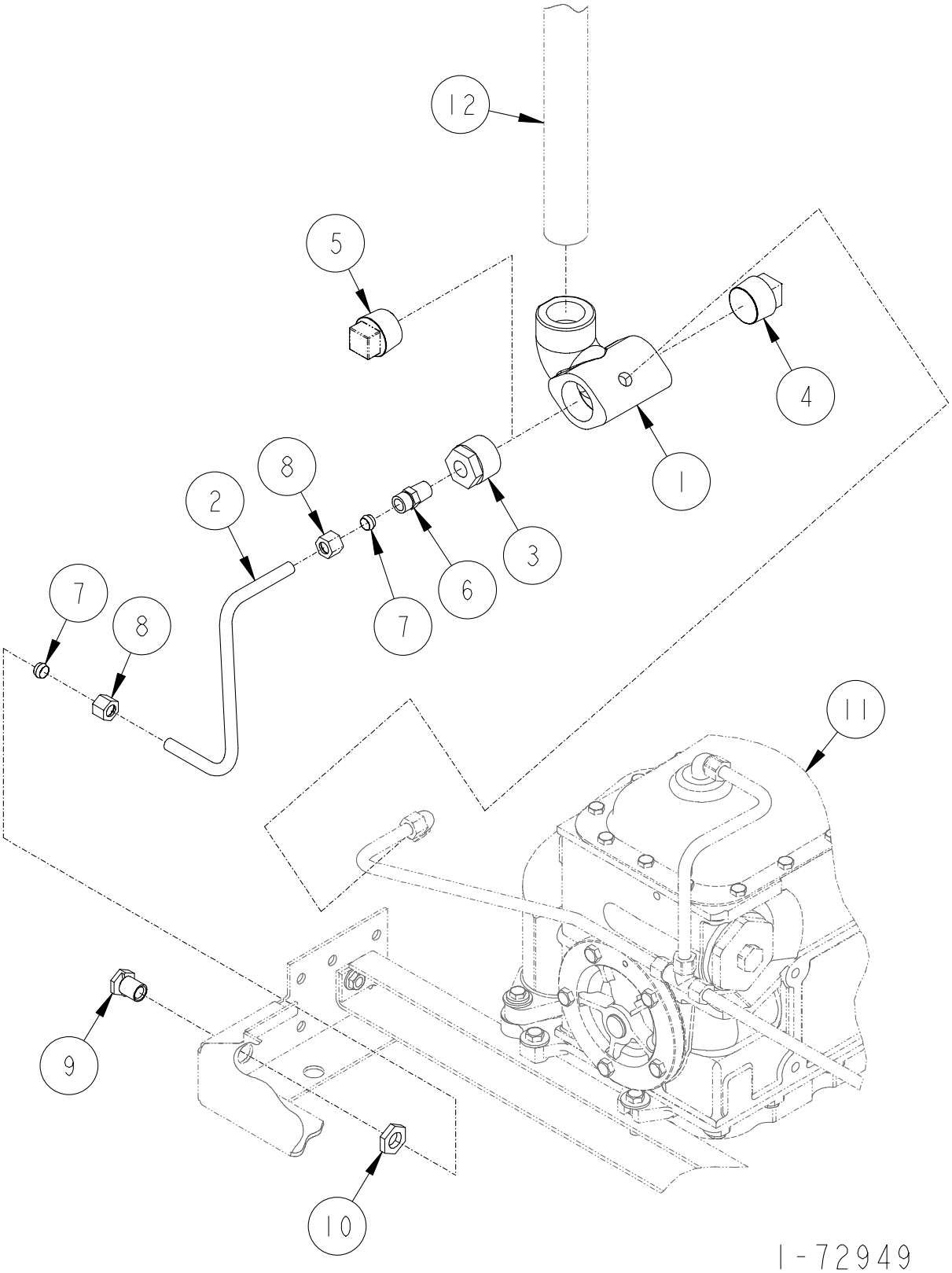

SUCTION VAPOR ASSEMBLY

INTERIM & FULL (BALANCE)

ITEM NO.	PART NO.	DESCRIPTION
1	2-319405	Offset Tee
2	Vapor Vent Tube	
	1-233739	30"
	1-321347	45"
3	14-51852	1" x 1/4" Hex Bushing
4	06-51900	1" Pipe Plug
5	06-51900	1" Pipe Plug
6	05-52010	Compression Connector
7	05-52040	Compression Sleeve
8	14-52040	Compression Nut
9	8300073	Air Separator Vent
10	8300074	Air Separator Vent Nut
11	For parts call out of Suction System see:	
	72897	H311C, H311D & H311C-SB3/5
	72898	H322C, H322D & H322C-SB3/5
	72899	H312C & H312D
	72900	H324C & H324D
	72901	H413C & H413D
	72902	H426C & H426D
	72903	H424C-SB3/4
	72904	H428C-SEB

ITEM NO.	PART NO.	DESCRIPTION
12	For parts call out of Discharge Assembly see:	
	72739	H311C, H311D
	72741	H312C, H312D
	72743	H322C, H322D
	72745	H322C-B3/5
	72747	H324C, H324D
	72797	H422C, H422D
	72798	H422C-B3/5
	72799	H413C, H413D
	72800	H426C, H426D
	72802	H424C-B3/4-IN/FN
	72803	H424C-B3/4+ Diesel
	72804	H426C-EB
	72805	H414C, H414D
	72807	H428C-EB
	72936	H422C-B3/5MR
	72940	H424C-B3/4TL-IN/FN
	72941	H424C-B3/4TR-IN/FN
	72942	H413C-EB
	Reference for Tokheim internal use only:	
	321170	Fuel Tube Hydraulic Assembly (45")
	321212	Fuel Tube Hydraulic Assembly (30")

1-72949

4
B

OUTLET ADAPTER ASSEMBLY
INTERIM/FULL VAPOR (BALANCE)

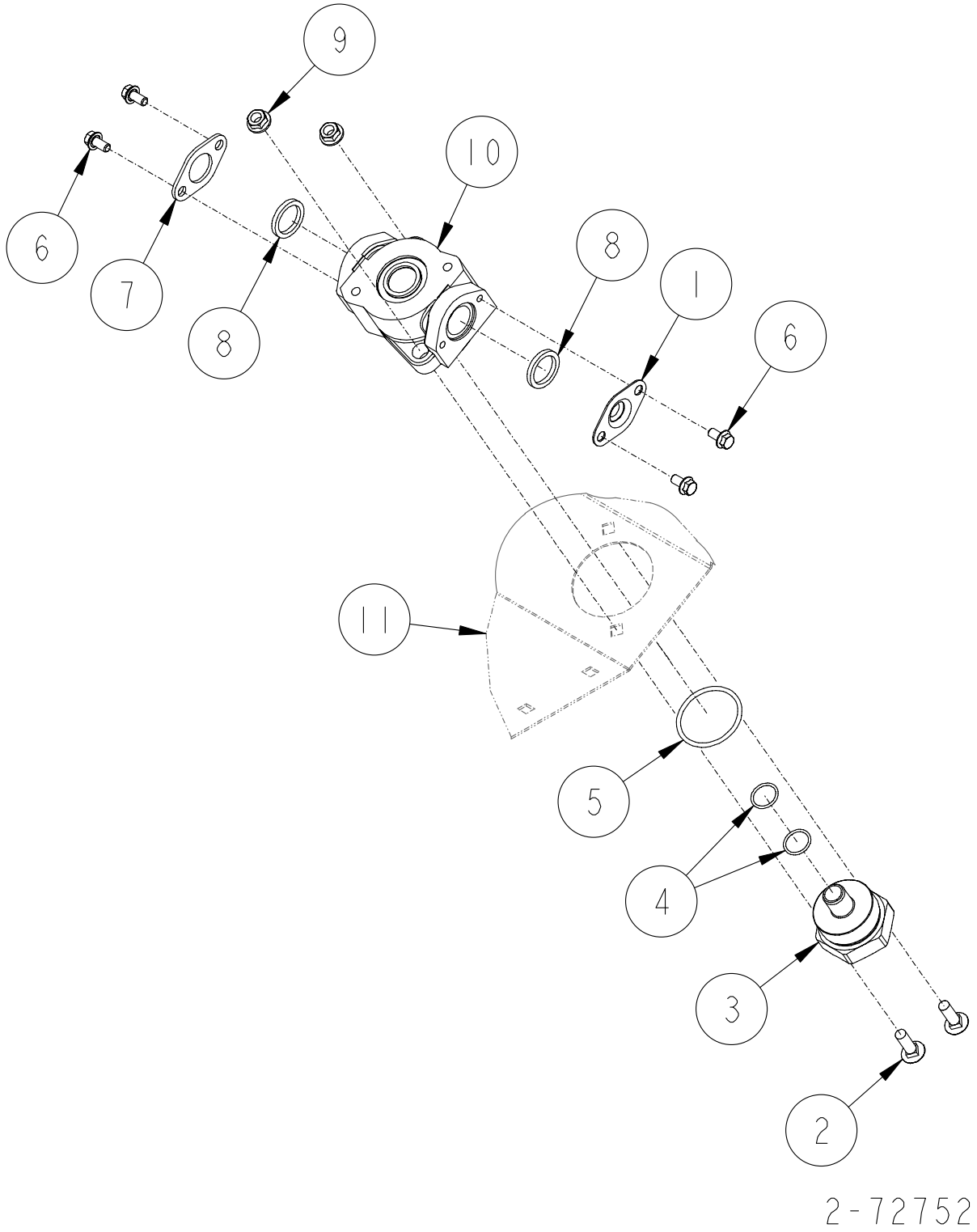

OUTLET ADAPTER ASSEMBLY
Interim/Full Vapor (Balance)

ITEM NO.	PART NO.	DESCRIPTION
1	1-231836	Vapor Cap
2	39-52198	5/16-18 x 1" Long Carriage Bolt
3	Outlet Adapter	
	1-227838	3/4" Non-Swivel (Interim Vapor only)
	1-232274	Flow Inverted (MaxVac only)
4	11-318940	"O" Ring (MaxVac only)
5	27-318940	"O" Ring (Interim Vapor & MaxVac only)
6	05-55132	1/4-20 x 1/2" Long M-F Flange Whiz Lock Screw
7	1-132494	Vapor Flange
8	13-313235	Gasket
9	02-54752	5/16-18 M-F Flange Whiz Lock Nut
10	1-422007	Outlet Adapter
11	For parts call out of Chassis Assembly see:	
	72779	H300C & H300D Series
	72724	H400C & H400D Series
	Reference for Tokheim internal use only:	
	422624	Raceway Assembly (H400C & H400D Series)
	422740	Raceway Assembly (H300C & H300D Series)

2-72752

4
B

OUTLET ADAPTER ASSEMBLY

INTERIM/FULL VAPOR (BALANCE)

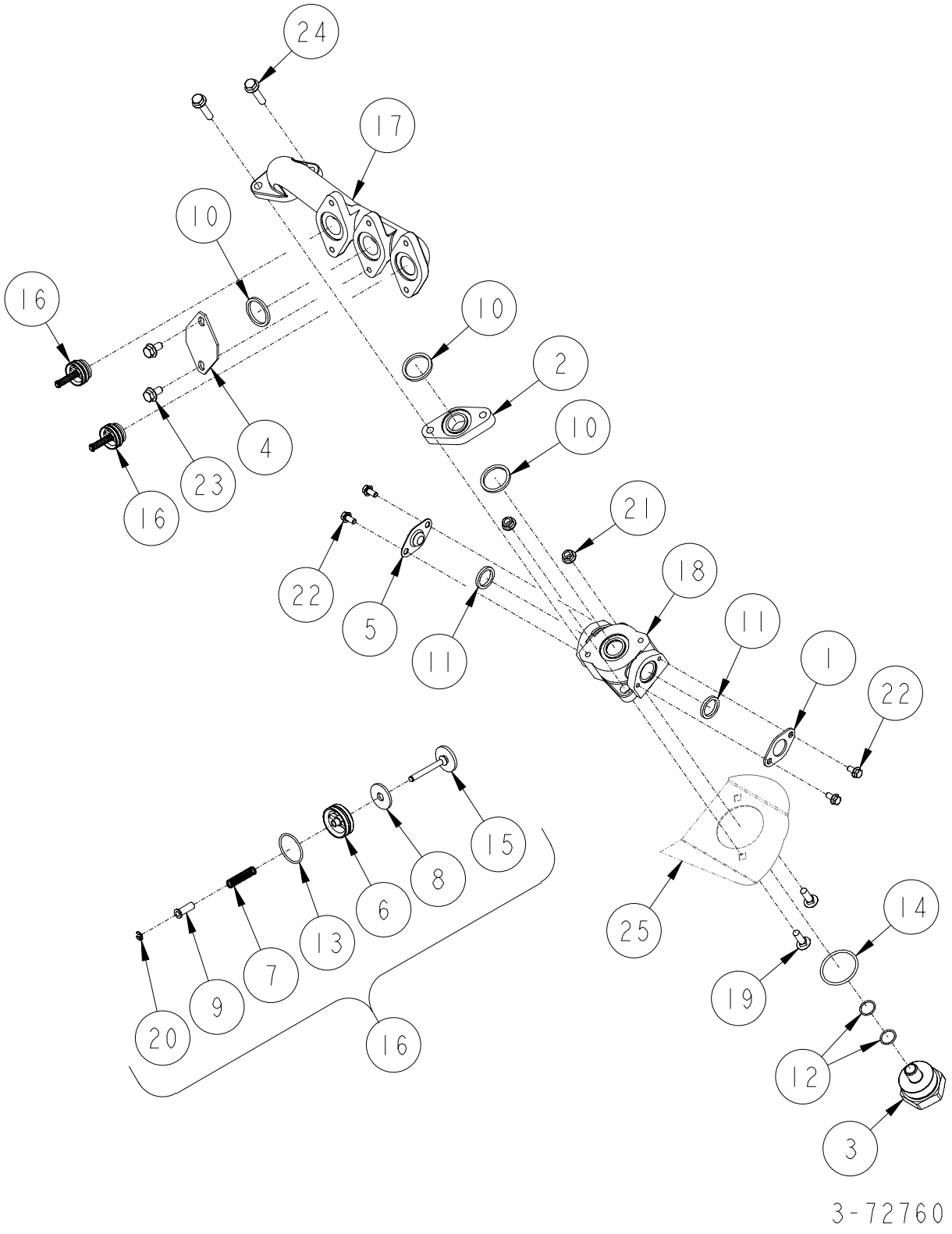

OUTLET ADAPTER ASSEMBLY

INTERIM/FULL VAPOR (BALANCE)

ITEM NO.	PART NO.	DESCRIPTION
1	1-132494	Vapor Flange
2	4-227299	Flange (Used with old Outlet Manifold 1-421962 only)
3	Outlet Adapter	
	1-227838	3/4" Non-Swivel
	1-232274	Flow Inverted (MaxVac Only)
4	1-228345	Manifold Cap
5	1-231836	Vapor Cap
6	Check Valve Seat	
	1-233801	All models except Canada
	2-233801	Canada
7	1-233802	Spring
8	1-233805	Poppet Seal
9	1-233807	Stem Sleeve
10	13-313235	Gasket
11	20-313235	Gasket
12	11-318940	"O" Ring (MaxVac only)
13	18-318940	"O" Ring
14	27-318940	"O" Ring
15	Poppet Assembly	
	1-321451	All models except Canada
	2-321451	Canada
16	Check Valve Assembly	
	321452-1	All models except Canada
	321452-2	Canada
17	Outlet Manifold	
	1-421962	Old Design (No longer used)
	1-423000	New Design
18	1-422007	Outlet Adapter
19	39-52198	5/16-18 x 1" Long Carriage Bolt
20	05-52482	Truarc Retaining Ring
21	02-54752	5/16-18 M-F Flange Whiz Lock Nut
22	05-55132	1/4-20 x 1/2" Long M-F Flange Whiz Lock Screw
23	35-55132	5/16-18 x 5/8" Long M-F Flange Whiz Lock Screw
24	41-55132	M-F Flange Whiz Lock Screw
25	For parts call out of Chassis Assembly see:	
	72779	H300C Series
	72724	H400C Series
	Reference for Tokheim internal use only:	
	422740	Raceway Assembly (H300C & H300D Series)

3-72760

4
B

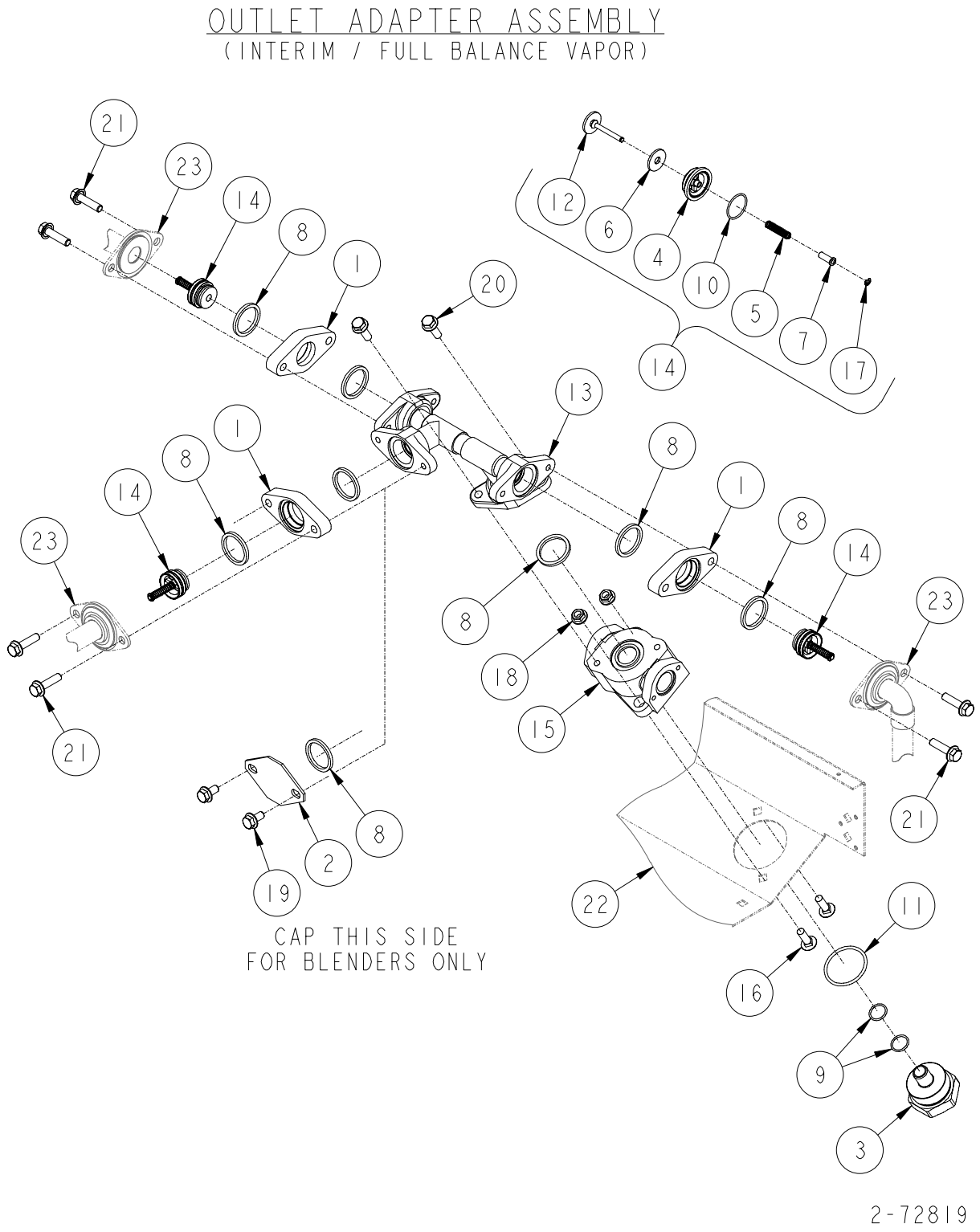
OUTLET ADAPTER ASSEMBLY
(INTERIM / FULL BALANCE VAPOR)
21
23
14
8
1
20
12
6
4
10
5
7
17
14
13
1
8
14
23
21
8
1
8
14
23
8
18
15
21
2
8
19
22
11
16
9
3
CAP THIS SIDE
FOR BLENDERS ONLY
2-72819

OUTLET ADAPTER ASSEMBLY

INTERIM / FULL (BALANCE)

ITEM NO.	PART NO.	DESCRIPTION
1	5-227299	Flange
2	1-228345	Manifold Cap
3	Outlet Adapter	
	1-227838	3/4" Non-Swivel
	1-232274	Flow Inverted (MaxVac only)
4	Check Valve Seat	
	1-233801	All models except Canada
	2-233801	Canada
5	1-233802	Spring
6	1-233805	Poppet Seal
7	1-233807	Stem Sleeve
8	13-313235	Gasket
9	11-318940	"O" Ring (MaxVac only)
10	18-318940	"O" Ring
11	27-318940	"O" Ring
12	Poppet Assembly	
	1-321451	All models except Canada
	2-321451	Canada
13	1-321491	Manifold Assembly
14	Check Valve Assembly	
	321452-1	All models except Canada
	321452-2	Canada
15	1-422007	Outlet Adapter
16	39-52198	5/16-18 x 1" Long Carriage Bolt
17	05-52482	Truarc Retaining Ring
18	02-54752	5/16-18 M-F Flange Whiz Lock Nut
19	35-55132	5/16-18 x 5/8" Long M-F Flange Whiz Lock Screw
20	38-55132	5/16-18 x 1" Long M-F Flange Whiz Lock Screw
21	40-55132	5/16-18 x 1-1/4" Long M-F Flange Whiz Lock Screw
22	For parts call out of Chassis Assembly see 72724	
23	For parts call out of Discharge Assembly see:	
	72801	H424C-IV
	72802	H424C-B3/4-IN/FN
	72803	H424C-B3/4+DEISEL-IV
	72936	H422C-B3/5MR
	72937	H424C-IN/FN
	72939	H424C/D-TRIN/FN
	72941	H424C-B3/4TR-IN/FN
	Reference for Tokheim internal use only:	
	422624	Raceway Assembly (H400C & H400D Series)

2-72819

4
B

OUTLET ADAPTER ASSEMBLY

NON VAPOR

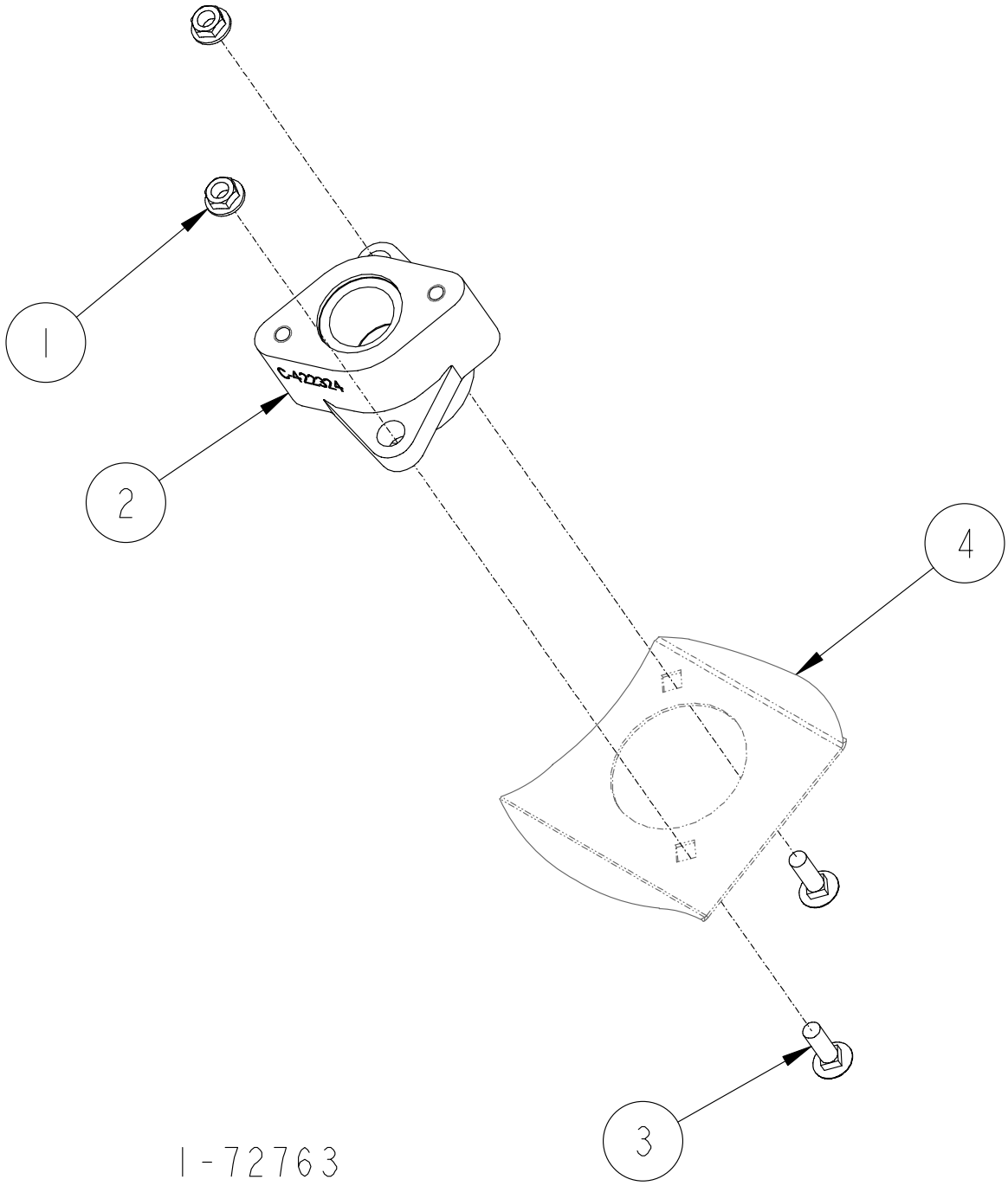

OUTLET ADAPTER ASSEMBLY
(NON VAPOR)

ITEM NO.	PART NO.	DESCRIPTION
1	02-54752	5/16-18 M-F Flange Whiz Lock Nut
2	Outlet Adapter	
	1-422324	3/4"
	2-422324	1"
3	39-52198	5/16-18 x 1" Long Carriage Bolt
4	For parts call out of Chassis Assembly see:	
	72779	H300C & H300DSeries
	72724	H400C & H400DSeries
	Reference for Tokheim internal use only:	
	422624	Raceway Assembly (H400C & H400D Series)
	422740	Raceway Assembly (H300C & H300D Series)

1-72763

FUEL TUBE CLAMP ASSEMBLY

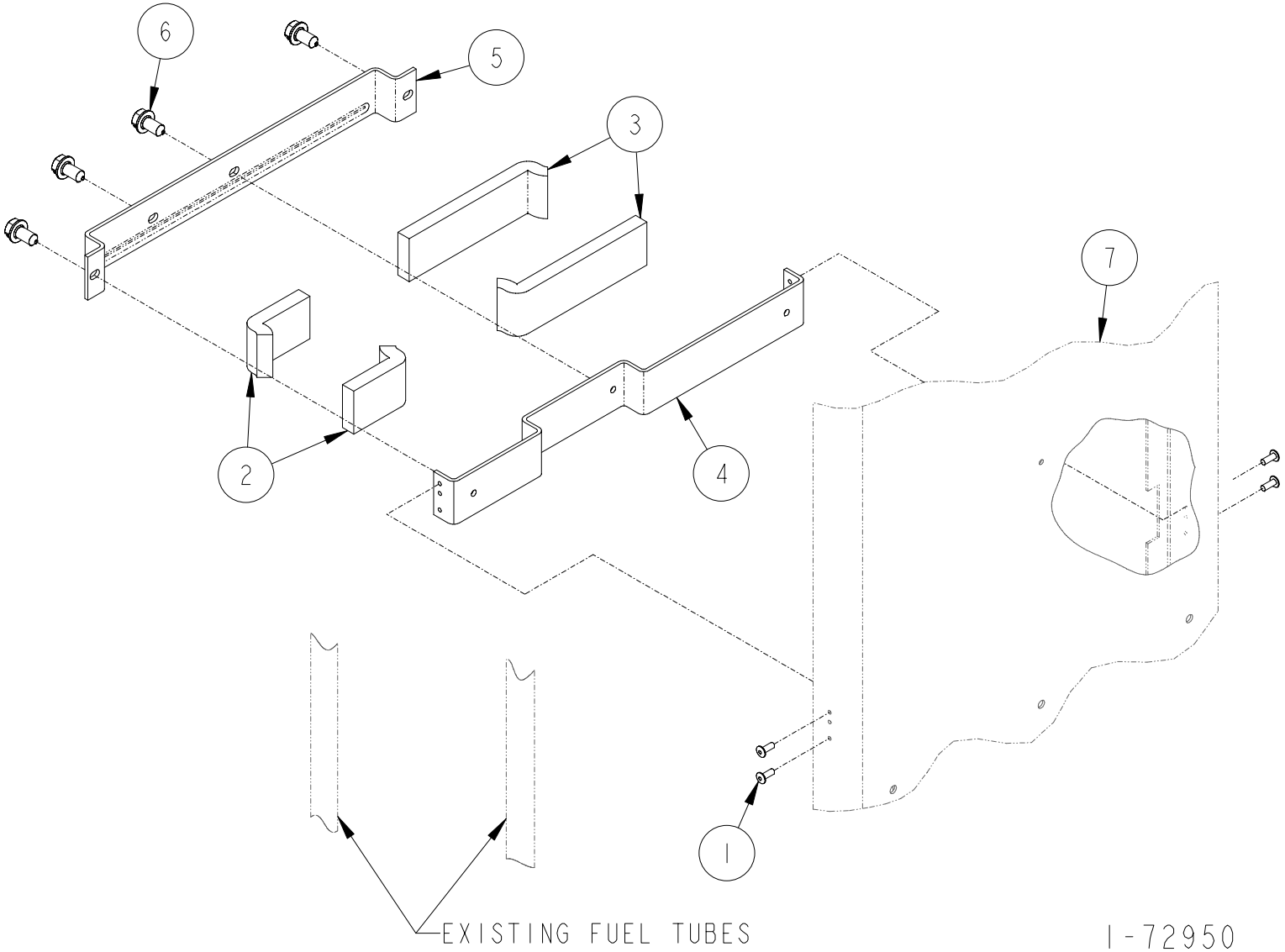

FUEL TUBE CLAMP ASSEMBLY

ITEM NO.	PART NO.	DESCRIPTION
1	2-128281	Rivet
2	15-317638	Cushion
3	49-317638	Cushion
4	1-321415	Tube Bracket
5	1-321416	Tube Holder
6	69-55392	1/4 x 1/2" Long Hex Washer Head Tapping Screw
7	For parts call out of Chassis Assembly see:	
	72779	45"
	72724	30"
	Reference for Tokheim internal use only:	
	321170	45"
	321212	30"

1-72950

SECTION 4C

898 Discharge Hydraulics (Max Vac)

Page Number

Discharge Assembly
- H311C & H311D 4C-2, 4C-3
- These pages reserved for future use 4C-4, 4C-5
- H312C & H312D 4C-6, 4C-7
- H322C & H322D 4C-8, 4C-9
- H322C-B3/5 ..... 4C-10, 4C-11
- H324C & H324D 4C-12, 4C-13
- These pages reserved for future use 4C-14, 4C-15
- H411C-B3/5 ..... 4C-16, 4C-17
- These pages reserved for future use ..... 4C-18—4C-25
- H413C & H413D 4C-26, 4C-27
- H413C-EB ..... 4C-28—4C-29
- These pages reserved for future use ..... 4C-30—4C-33
- H422C & H422D 4C-34, 4C-35
- H422C-B3/5 ..... 4C-36, 4C-37
- H424C & H424D 4C-38, 4C-39
- H424C-TL & H424D-TL 4C-40, 4C-41
- H424C-TR & H424D-TR 4C-42, 4C-43
- H424C-B3/4 ..... 4C-44, 4C-45
- H424C-B3/4-TL 4C-46, 4C-47
- H424C-B3/4-TR 4C-48, 4C-49
- H424C-B3/4-MN 4C-50, 4C-51
- H426C & H426D 4C-52, 4C-53

Page Number

Discharge Assembly (Continued)
- H426C-EB 4C-54, 4C-55
- H428C & H428D 4C-56, 4C-57
- H428C-EB 4C-58, 4C-59

Outlet Adapter Assembly
- H311C, H312C, H322C, H324C, H413C, H424C, H424C-B3/4, H424C-B3/4+DIESEL, H426C, H426C-EB, H428C, H428C-EB, H311D, H312D, H322D, H324D, H413D, H424D, H426D, H428D 4C-60, 4C-61
- H322C-B3/5, H422C, H422C-B3/5, H424C, H424C-B3/4, H426C-EB, H422D, H424D 4C-62, 4C-63
- H424C-IV, H424C-B3/4-IV, H424C-B3/4-TLIN/FN, H424C-B3/4-TRIN/FN 4C-64, 4C-65
- Non Vapor 4C-66, 4C-67

MaxVac Assembly 4C-68, 4C-69

Fuel Tube Clamp Assembly 4C-70, 4C-71

DISCHARGE ASSEMBLY

H311C-MV & H311D-MV

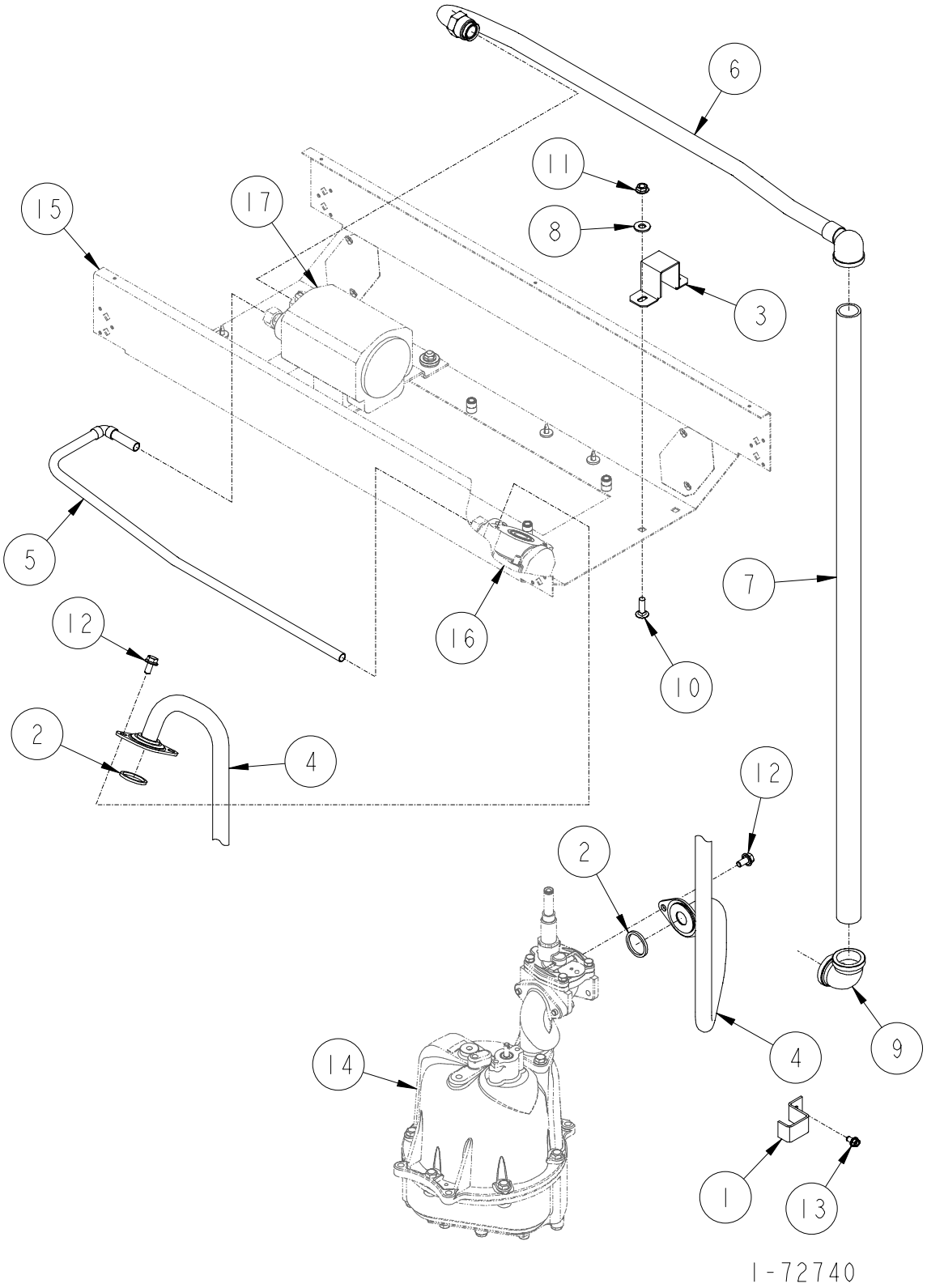

DISCHARGE ASSEMBLY

H311C-MV & H311C-MV

ITEM NO.	PART NO.	DESCRIPTION
1	1-231856	Discharge Tube Bracket
2	13-313235	Gasket
3	1-321154	Down Pipe Bracket
4	1-422641	Fuel Discharge Tube
5	2-422735	Vapor Outlet Tube
6	2-422736	Vapor Outlet Tube
7	335-50510	1-1/2" x 81-1/2" Long Pipe
8	03-50611	5/16 Plate Washer
9	06-51700	1" x 90° Elbow - Banded (Remote Control)
	2-319405	Offset Tee (Suction System)
10	39-52198	5/16-18 x 1" Long Carriage Bolt
11	02-54752	5/16-18 M-F Flange Whiz Lock Nut
12	35-55132	5/16-18 x 5/8" Long M-F Flange Whiz Lock Screw
13	69-55392	1/4 x 1/2" Long Hex Washer Head Tapping Screw
14	For parts call out of Meter & Hydraulics Assembly see 72726.	
15	For parts call out of Chassis Assembly see 72779.	
16	For parts call out of Outlet Adaptor Assembly see 72753.	
17	For parts call ot of MaxVac Pump Assembly see 72751.	

Reference for Tokheim internal use only:

321212	Fuel Tube Hydraulic Assembly
422740	Raceway Assembly

1-72740

4
C

This page reserved for future use.

This page reserved for future use.

DISCHARGE ASSEMBLY

H312C-MV & H312D-MV

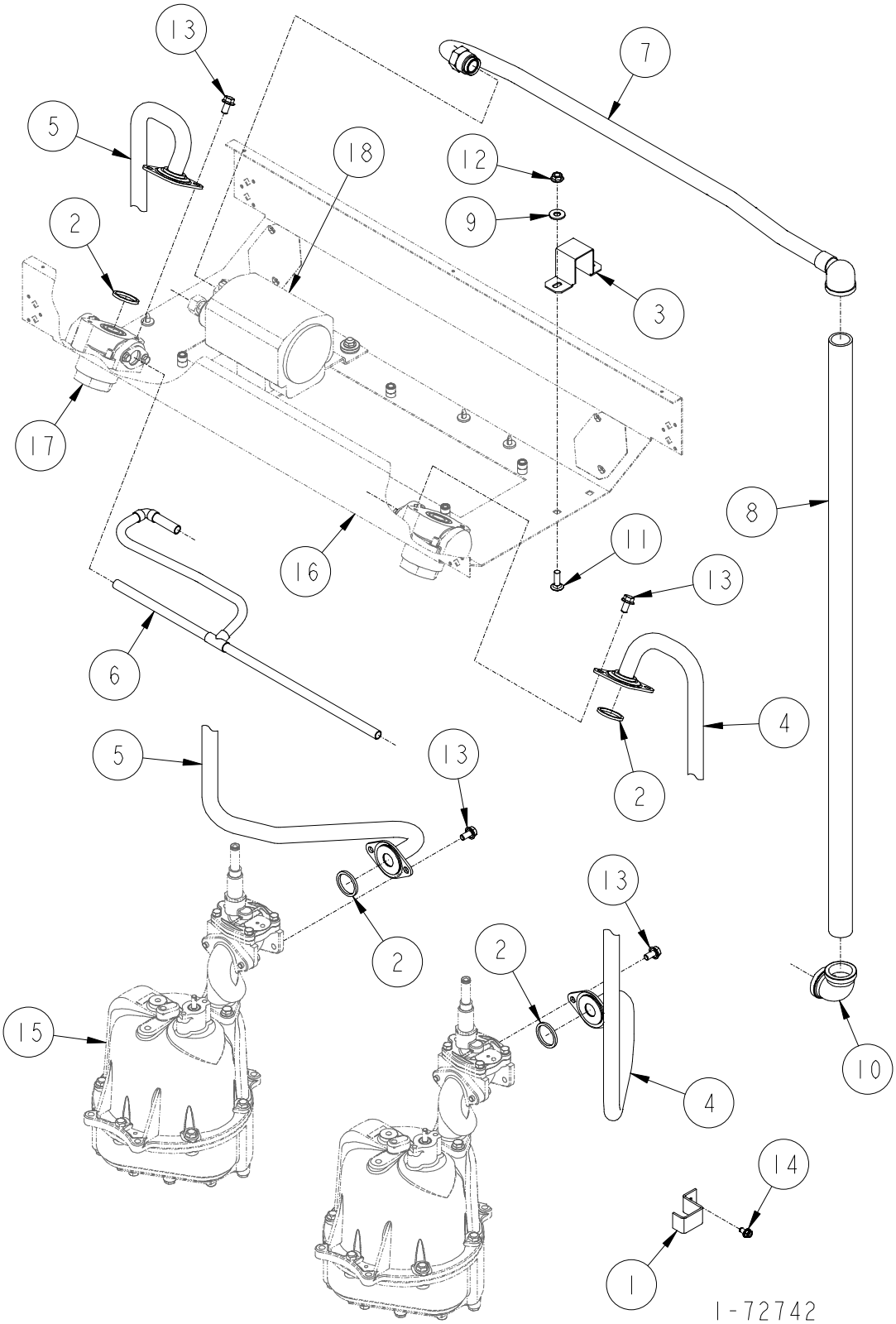

DISCHARGE ASSEMBLY

H312C-MV & H312D-MV

ITEM NO.	PART NO.	DESCRIPTION
1	1-231856	Discharge Tube Bracket
2	13-313235	Gasket
3	1-321154	Down Pipe Bracket
4	1-422641	Fuel Discharge Tube
5	1-422642	Fuel Discharge Tube
6	2-422735	Vapor Outlet Tube
7	2-422736	Vapor Outlet Tube
8	335-50510	1-1/2" x 81-1/2" Long Pipe
9	03-50611	5/16 Plate Washer
10	06-51700	1" x 90° Elbow - Banded (Remote Control)
	2-319405	Offset Tee (Suction System)
11	39-52198	5/16-18 x 1" Long Carriage Bolt
12	02-54752	5/16-18 M-F Flange Whiz Lock Nut
13	35-55132	5/16-18 x 5/8" Long M-F Flange Whiz Lock Screw
14	69-55392	1/4 x 1/2" Long Hex Washer Head Tapping Screw
15	For parts call out of Meter & Hydraulics Assembly see 72726.	
16	For parts call out of Chassis Assembly see 72779.	
17	For parts call out of Outlet Adaptor Assembly see 72753.	
18	For parts call out of MaxVac Pump Assembly see 72751.	

Reference for Tokheim internal use only:

321212	Fuel Tube Hydraulic Assembly
422740	Raceway Assembly

1-72742

4
C

DISCHARGE ASSEMBLY

H322C-MV & H322D-MV

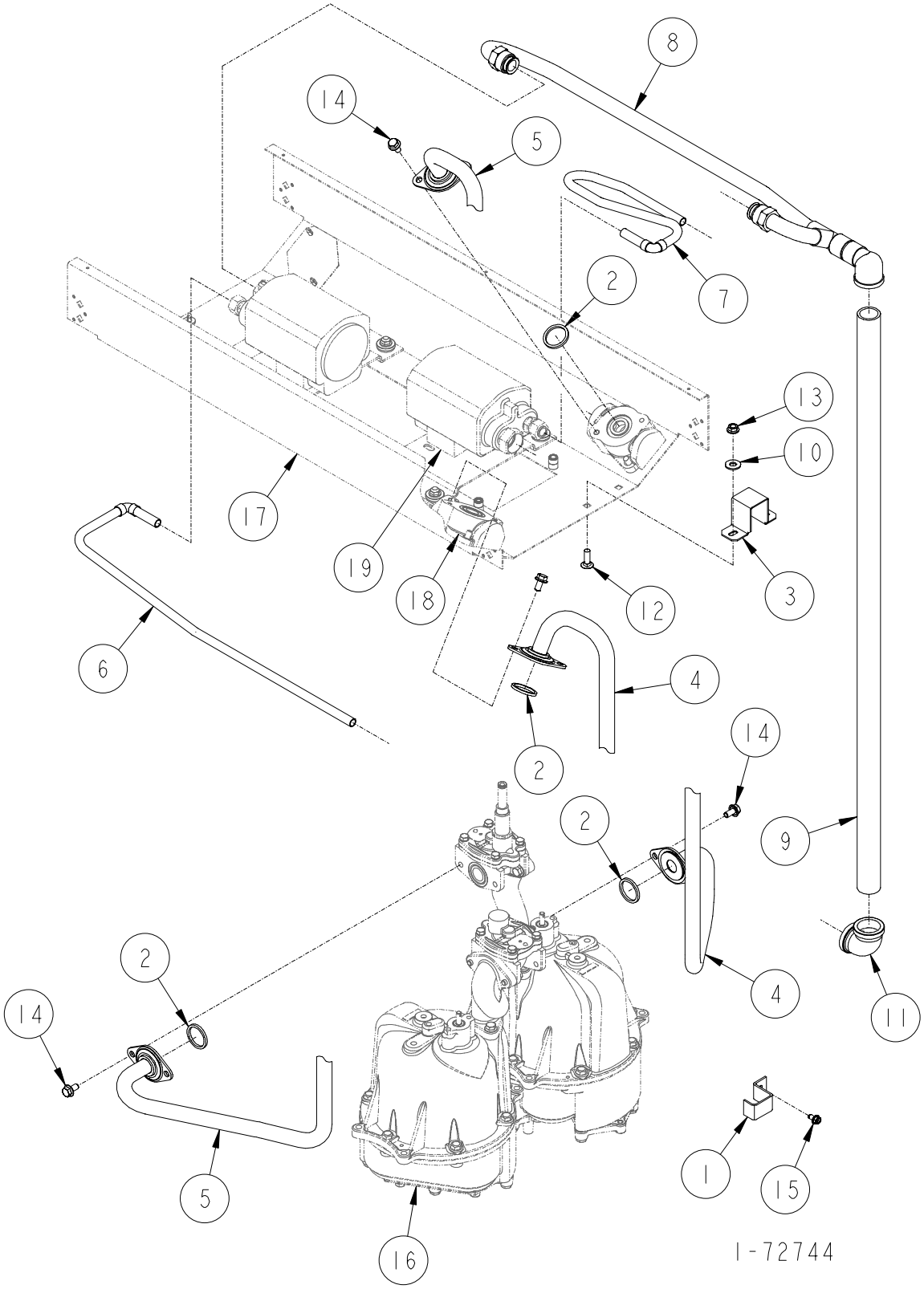

DISCHARGE ASSEMBLY

H322C-MV & H322D-MV

ITEM NO.	PART NO.	DESCRIPTION
1	1-231856	Discharge Tube Bracket
2	13-313235	Gasket
3	1-321154	Down Pipe Bracket
4	1-422641	Fuel Discharge Tube
5	1-422642	Fuel Discharge Tube
6	2-422735	Vapor Outlet Tube
7	3-422735	Vapor Outlet Tube
8	1-422736	Vapor Outlet Tube
9	335-50510	1-1/2" x 81-1/2" Long Pipe
10	03-50611	5/16 Plate Washer
11	06-51700	1" x 90° Elbow - Banded (Remote Control)
	2-319405	Offset Tee (Suction System)
12	39-52198	5/16-18 x 1" Long Carriage Bolt
13	02-54752	5/16-18 M-F Flange Whiz Lock Nut
14	35-55132	5/16-18 x 5/8" Long M-F Flange Whiz Lock Screw
15	69-55392	1/4 x 1/2" Long Hex Washer Head Tapping Screw
16	For parts call out of Meter & Hydraulics Assembly see 72726.	
17	For parts call out of Chassis Assembly see 72779.	
18	For parts call out of Outlet Adaptor Assembly see 72753.	
19	For parts call out of MaxVac Pump Assembly see 72751.	

Reference for Tokheim internal use only:

321212	Fuel Tube Hydraulic Assembly
422740	Raceway Assembly

1-72744

4
C

DISCHARGE ASSEMBLY

H322C-B3/5-MV

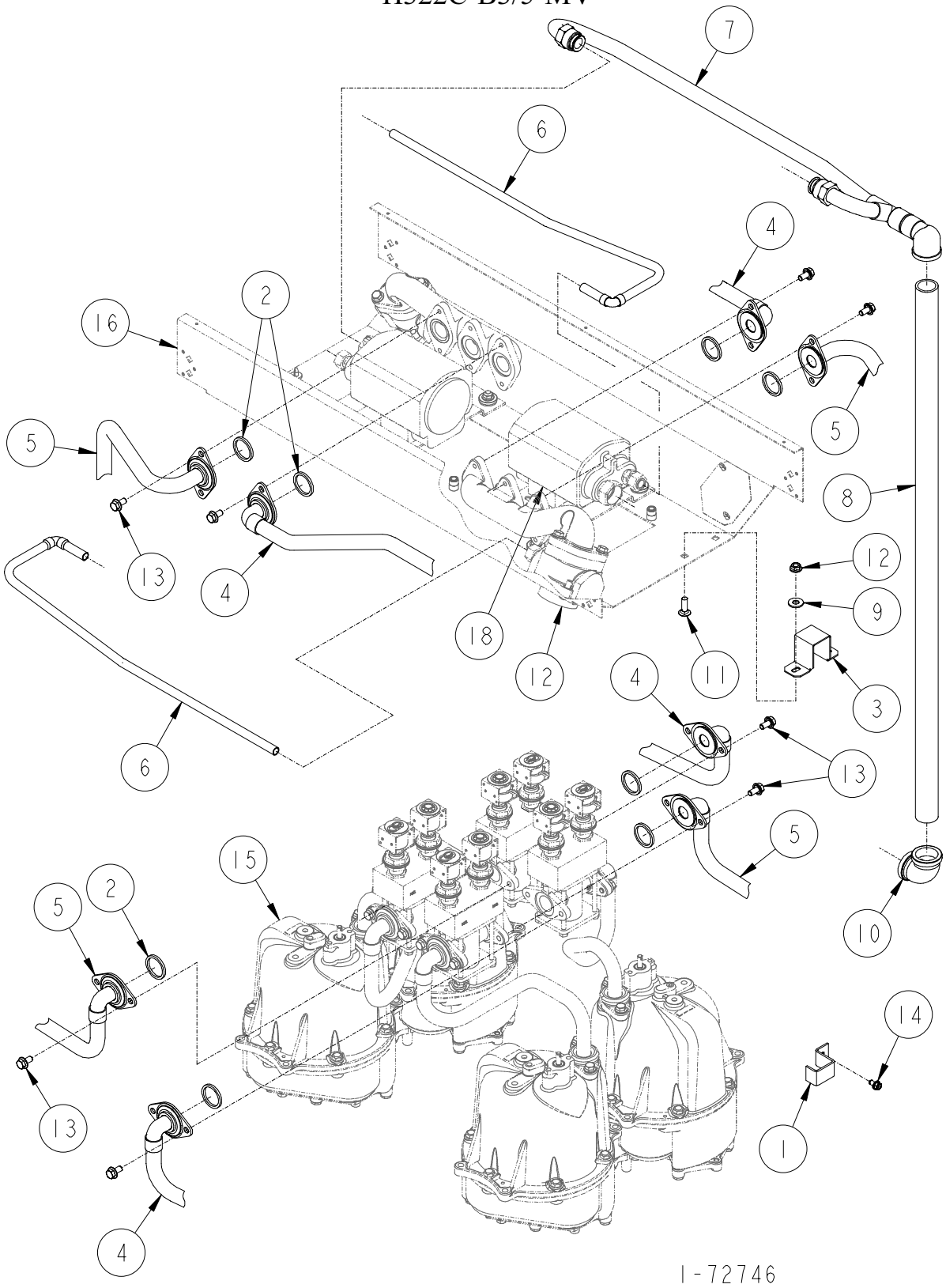

DISCHARGE ASSEMBLY

H322C-B3/5-MV

ITEM NO.	PART NO.	DESCRIPTION
1	1-231856	Discharge Tube Bracket
2	13-313235	Gasket
3	1-321154	Down Pipe Bracket
4	1-422696	Fuel Discharge Tube
5	1-422711	Fuel Discharge Tube
6	2-422735	Vapor Outlet Tube
7	1-422736	Vapor Outlet Tube
8	335-50510	1-1/2" x 81-1/2" Long Pipe
9	03-50611	5/16 Plate Washer
10	06-51700	1" x 90° Elbow - Banded (Remote Control)
	2-319405	Offset Tee (Suction System)
11	39-52198	5/16-18 x 1" Long Carriage Bolt
12	02-54752	5/16-18 M-F Flange Whiz Lock Nut
13	35-55132	5/16-18 x 5/8" Long M-F Flange Whiz Lock Screw
14	69-55392	1/4 x 1/2" Long Hex Washer Head Tapping Screw
15	For parts call out of Meter & Hydraulics Assembly see 72726.	
16	For parts call out of Chassis Assembly see 72779.	
17	For parts call out of Outlet Adaptor Assembly see 72762.	
18	For parts call out of MaxVac Pump Assembly see 72751.	

Reference for Tokheim internal use only:

321212	Fuel Tube Hydraulic Assembly
422740	Raceway Assembly

1-72746

4
C

DISCHARGE ASSEMBLY

H324C-MV & H324D-MV

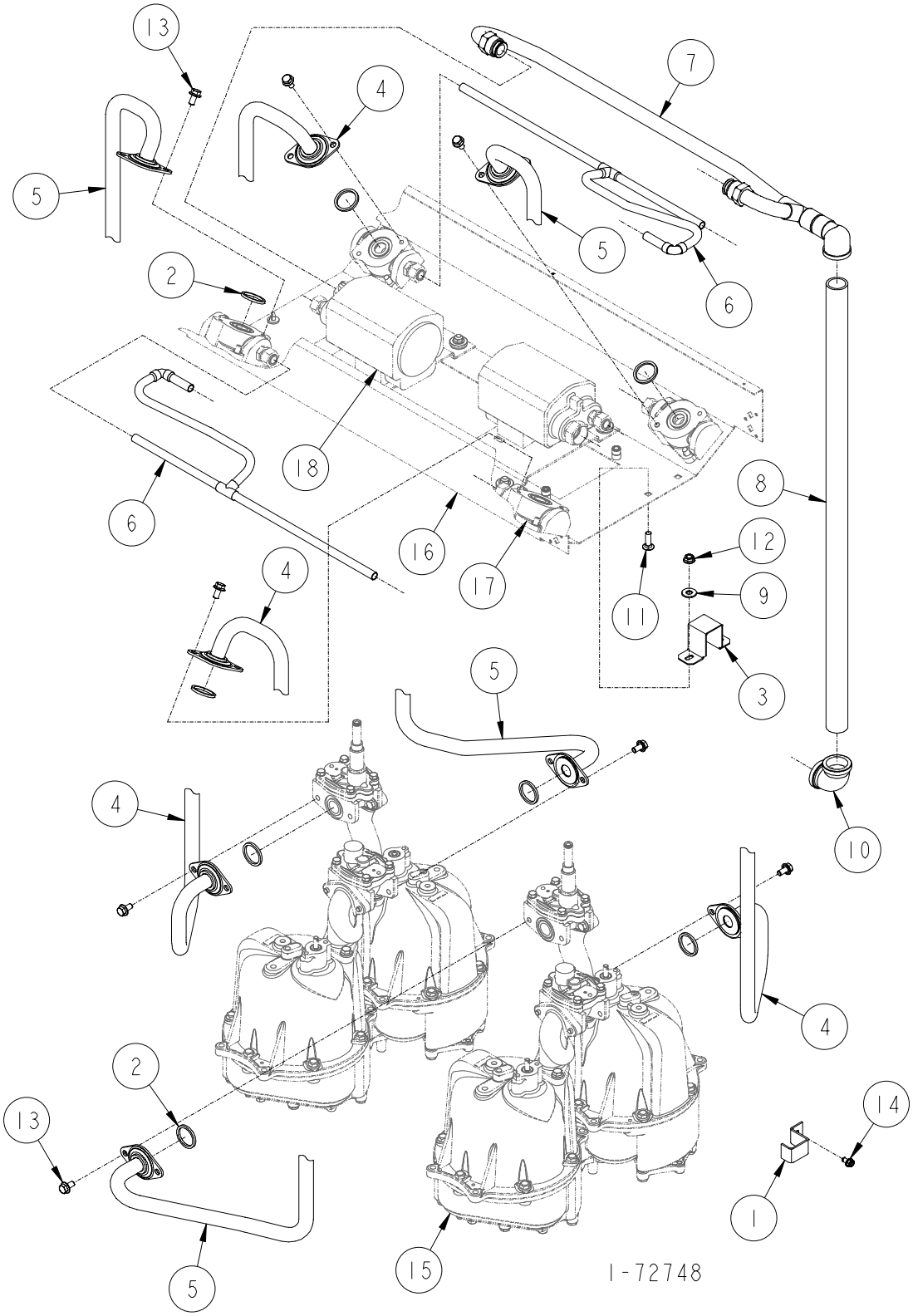

DISCHARGE ASSEMBLY

H324C-MV & H324D-MV

ITEM NO.	PART NO.	DESCRIPTION
1	1-231856	Discharge Tube Bracket
2	13-313235	Gasket
3	1-321154	Down Pipe Bracket
4	1-422641	Fuel Discharge Tube
5	1-422642	Fuel Discharge Tube
6	1-422735	Vapor Outlet Tube
7	1-422736	Vapor Outlet Tube
8	335-50510	1-1/2" x 81-1/2" Long Pipe
9	03-50611	5/16 Plate Washer
10	06-51700	1" x 90° Elbow - Banded (Remote Control)
	2-319405	Offset Tee (Suction System)
11	39-52198	5/16-18 x 1" Long Carriage Bolt
12	02-54752	5/16-18 M-F Flange Whiz Lock Nut
13	35-55132	5/16-18 x 5/8" Long M-F Flange Whiz Lock Screw
14	69-55392	1/4 x 1/2" Long Hex Washer Head Tapping Screw
15	For parts call out of Meter & Hydraulics Assembly see 72726.	
16	For parts call out of Chassis Assembly see 72779.	
17	For parts call out of Outlet Adaptor Assembly see 72753.	
18	For parts call out of MaxVac Pump Assembly see 72751.	

Reference for Tokheim internal use only:

321212	Fuel Tube Hydraulic Assembly
422740	Raceway Assembly

1-72748

4
C

This page reserved for future use.

This page reserved for future use.

DISCHARGE ASSEMBLY

H411C-B3/5-MV

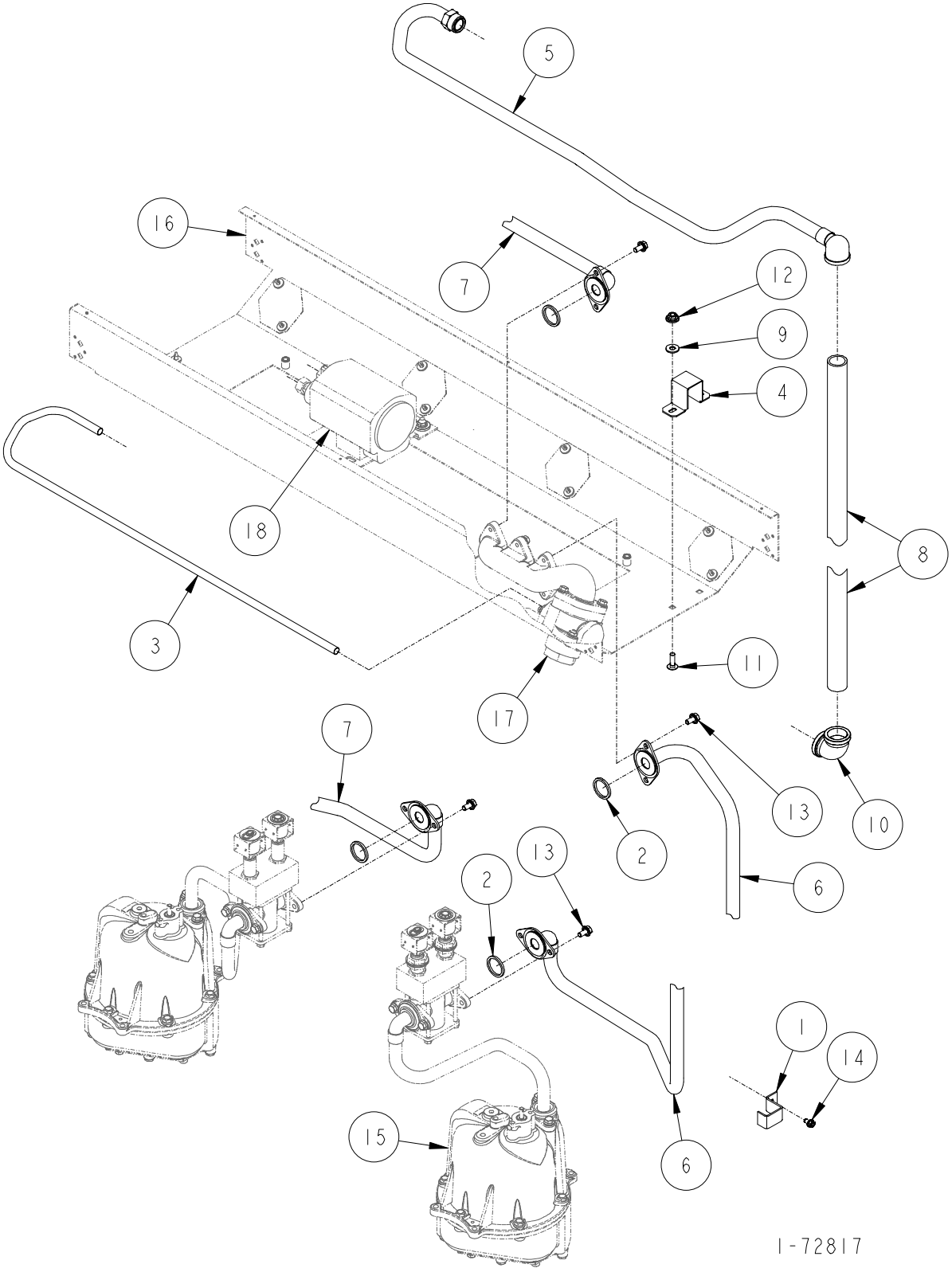

DISCHARGE ASSEMBLY

H411C-B3/5-MV

ITEM NO.	PART NO.	DESCRIPTION
1	1-231856	Discharge Tube Bracket
2	13-313235	Gasket
3	1-321135	Vapor Inlet Tube
4	1-321154	Down Pipe Bracket
5	2-422630	Vapor Outlet Tube
6	1-422732	Fuel Discharge Tube
7	1-422733	Fuel Discharge Tube
8	335-50510	1-1/2" x 81-1/2" Long Pipe
9	03-50611	5/16 Plate Washer
10	06-51700	1" x 90° Elbow - Banded (Remote Control)
	2-319405	Offset Tee (Suction System)
11	39-52198	5/16-18 x 1" Long Carriage Bolt
12	02-54752	5/16-18 M-F Flange Whiz Lock Nut
13	35-55132	5/16-18 x 5/8" Long M-F Flange Whiz Lock Screw
14	69-55392	1/4 x 1/2" Long Hex Washer Head Tapping Screw
15	For parts call out of Meter & Hydraulics Assembly see 72728.	
16	For parts call out of Chassis Assembly see 72724.	
17	For parts call out of Outlet Adapter Assembly see 72762.	
18	For parts call out of MaxVac Assembly see 72751.	

Reference for Tokheim internal use only:

321170	Fuel Tube Hydraulic Assembly
422624	Raceway Assembly

1-72817

4
C

This page reserved for future use.

This page reserved for future use.

This page reserved for future use.

This page reserved for future use.

This page reserved for future use.

This page reserved for future use.

This page reserved for future use.

This page reserved for future use.

DISCHARGE ASSEMBLY

H413C-MV & H413D-MV

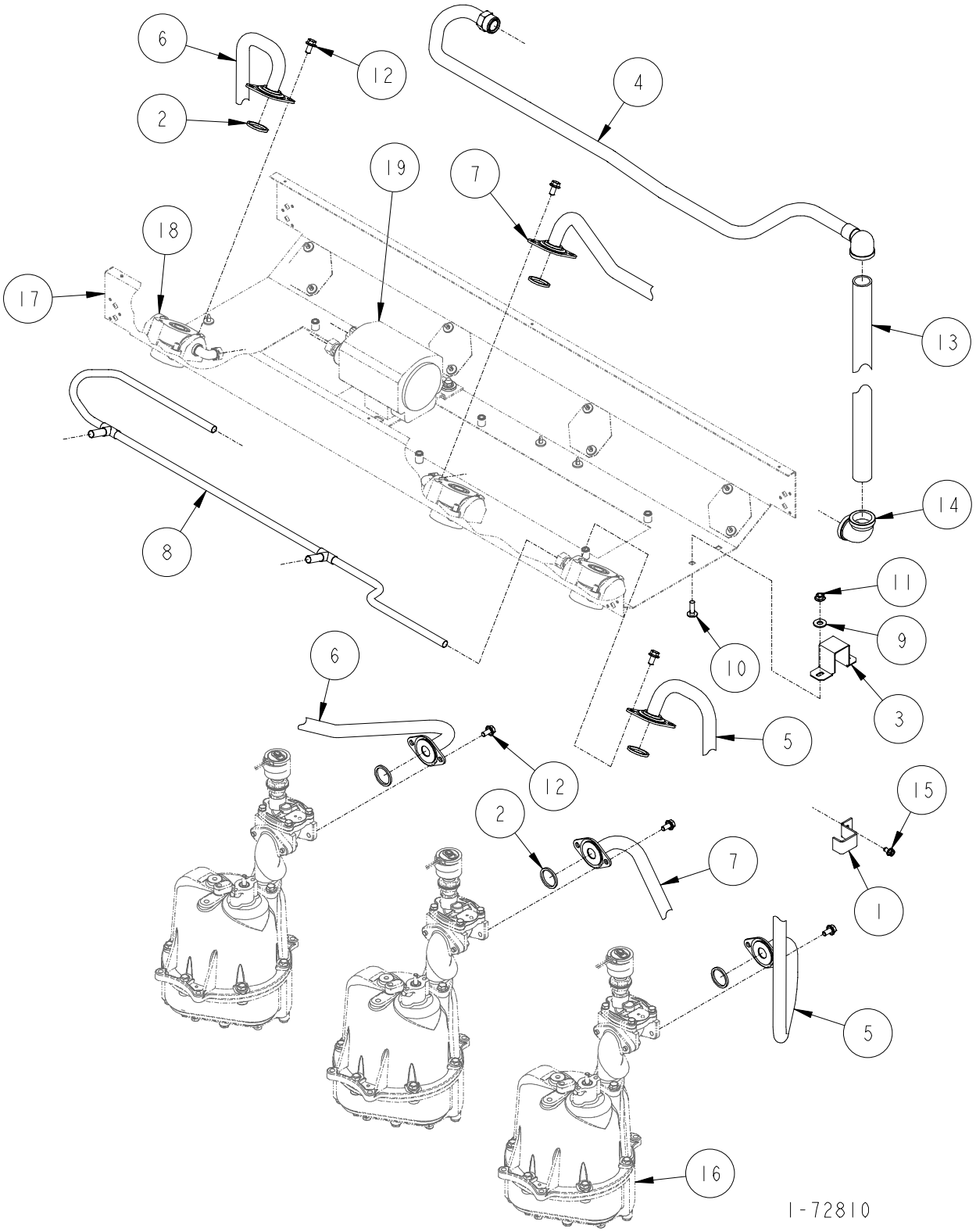

DISCHARGE ASSEMBLY

H413C-MV & H413D-MV

ITEM NO.	PART NO.	DESCRIPTION
1	1-231856	Discharge Tube Bracket
2	13-313235	Gasket
3	1-321154	Down Pipe Bracket
4	2-422630	Vapor Outlet Tube
5	1-422641	Fuel Discharge Tube
6	1-422642	Fuel Discharge Tube
7	1-422643	Fuel Discharge Tube
8	2-422683	Vapor Inlet Manifold
9	03-50611	5/16 Plate Washer
10	39-52198	5/16-18 x 1" Long Carriage Bolt
11	02-54752	5/16-18 M-F Flange Whiz Lock Nut
12	35-55132	5/16-18 x 5/8" Long M-F Flange Whiz Lock Screw
13	335-50510	1-1/2" x 81-1/2" Long Pipe
14	06-51700	1" x 90° Elbow - Banded (Remote Control)
	2-319405	Offset Tee (Suction System)
15	69-55392	1/4 x 1/2" Long Hex Washer Head Tapping Screw
16	For parts call out of Meter & Hydraulics Assembly see 72726.	
17	For parts call out of Chassis Assembly see 72724.	
18	For parts call out of Outlet Adapter Assembly see 72753.	
19	For parts call out of MaxVac Assembly see 72751.	

Reference for Tokheim internal use only:

321170	Fuel Tube Hydraulic Assembly
422624	Raceway Assembly

1-72810

4 C

DISCHARGE ASSEMBLY

H413C-EB-MV

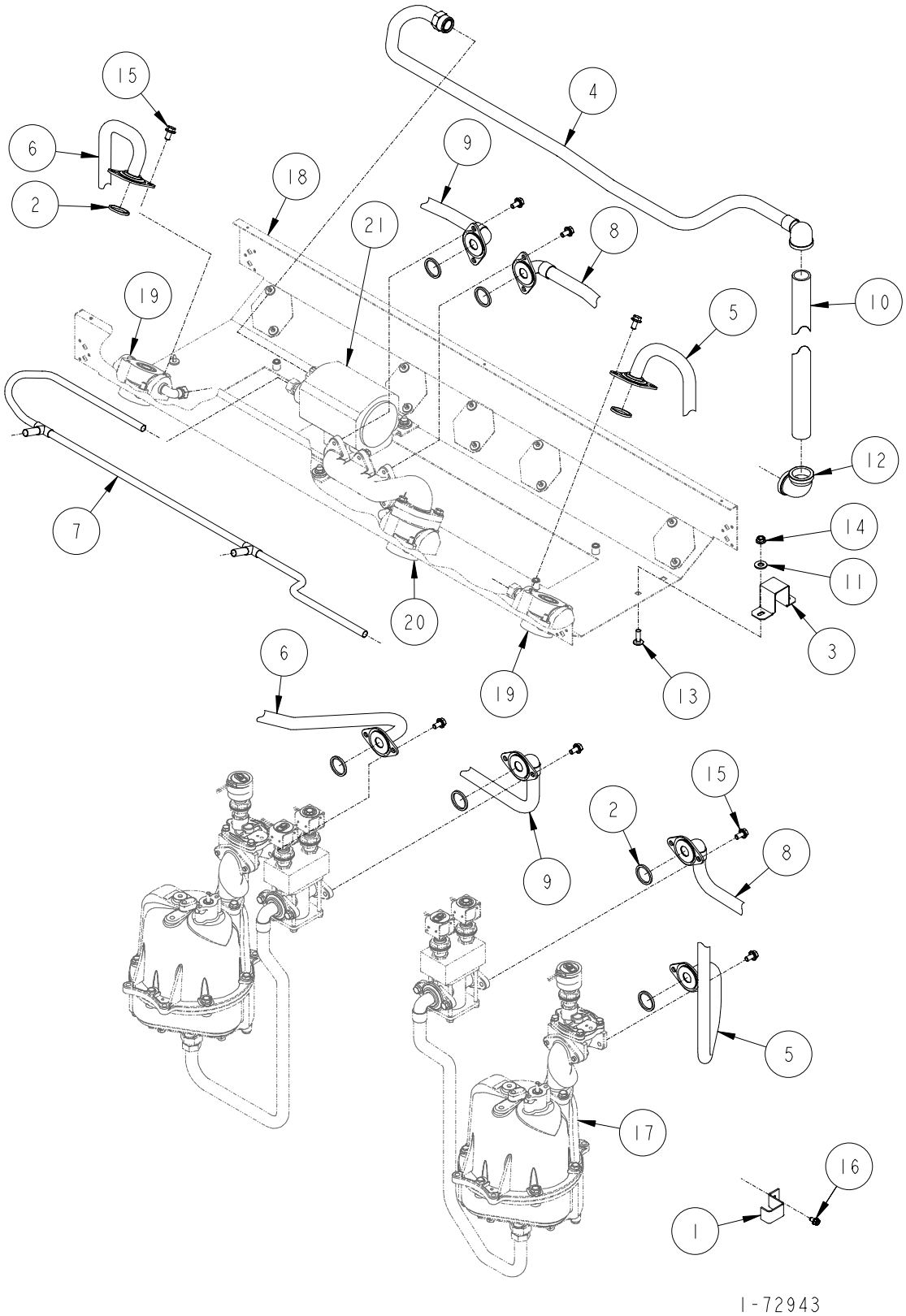

DISCHARGE ASSEMBLY

H413C-EB-MV

ITEM NO.	PART NO.	DESCRIPTION
1	1-231856	Discharge Tube Bracket
2	13-313235	Gasket
3	1-321154	Down Pipe Bracket
4	2-422630	Vapor Outlet Tube
5	1-422641	Fuel Discharge Tube
6	1-422642	Fuel Discharge Tube
7	2-422683	Vapor Inlet Manifold
8	1-422706	Fuel Discharge Tube
9	1-422707	Fuel Discharge Tube
10	335-50510	1-1/2" x 81-1/2" Long Pipe
11	03-50611	5/16 Plate Washer
12	06-51700	1" x 90° Elbow - Banded (Remote Control)
	2-319405	Offset Tee (Suction System)
13	39-52198	5/16-18 x 1" Long Carriage Bolt
14	02-54752	5/16-18 M-F Flange Whiz Lock Nut
15	35-55132	5/16-18 x 5/8" Long M-F Flange Whiz Lock Screw
16	69-55392	1/4 x 1/2" Long Hex Washer Head Tapping Screw
17	For parts call out of Meter & Hydraulics Assembly see 72729.	
18	For parts call out of Chassis Assembly see 72724.	
19	For parts call out of Outlet Adapter Assembly see 72753.	
20	For parts call out of Outlet Adapter Assembly see 72762.	
21	For parts call out of MaxVac Assembly see 72751.	

Reference for Tokheim internal use only:

321170	Fuel Tube Hydraulic Assembly
422624	Raceway Assembly

1-72943

4
C

This page reserved for future use.

This page reserved for future use.

This page reserved for future use.

This page reserved for future use.

DISCHARGE ASSEMBLY

H422C-MV & H422D-MV

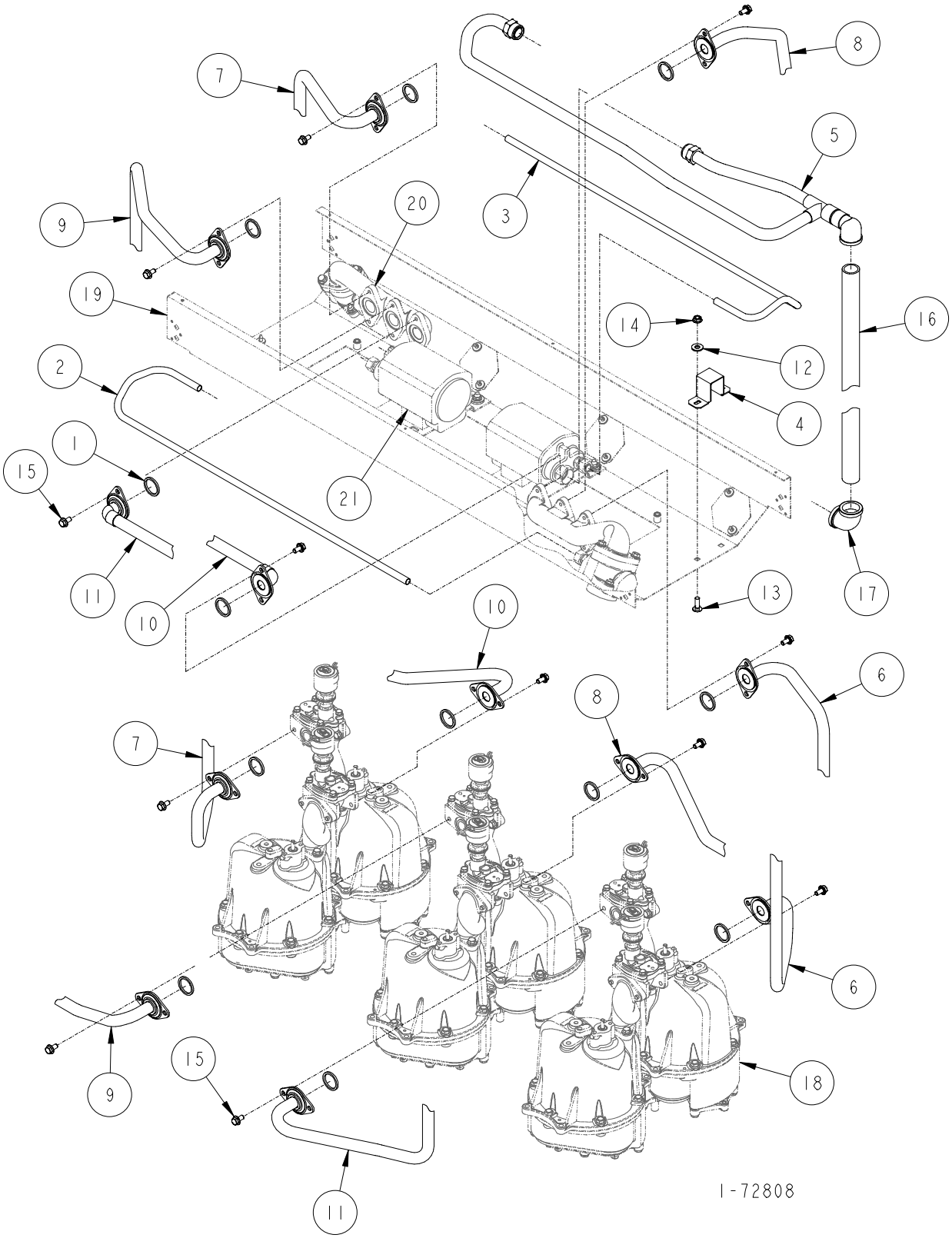

DISCHARGE ASSEMBLY

H422C-MV & H422D-MV

ITEM NO.	PART NO.	DESCRIPTION
1	13-313235	Gasket
2	1-321135	Vapor Inlet Tube (H422C Side A)
3	1-321135	Vapor Inlet Tube (H422C Side B)
4	1-321154	Down Pipe Bracket
5	1-422630	Vapor Outlet Tube
6	1-422729	Fuel Discharge Tube (H422C Side A)
7	1-422729	Fuel Discharge Tube (H422C Side B)
8	1-422730	Fuel Discharge Tube (H422C Side A)
9	1-422730	Fuel Discharge Tube (H422C Side B)
10	1-422731	Fuel Discharge Tube (H422C Side A)
11	1-422731	Fuel Discharge Tube (H422C Side B)
12	03-50611	5/16 Plate Washer
13	39-52198	5/16-18 x 1" Long Carriage Bolt
14	02-54752	5/16-18 M-F Flange Whiz Lock Nut
15	35-55132	5/16-18 x 5/8" Long M-F Flange Whiz Lock Screw
16	335-50510	1-1/2" x 81-1/2" Long Pipe
17	06-51700	1" x 90° Elbow - Banded (Remote Control)
	2-319405	Offset Tee (Suction System)
18	For parts call out of Meter & Hydraulics Assembly see 72726.	
19	For parts call out of Chassis Assembly see 72724.	
20	For parts call out of Outlet Adapter Assembly see 72762.	
21	For parts call out of MaxVac Assembly see 72751.	

Reference for Tokheim internal use only:

321170	Fuel Tube Hydraulic Assembly
422624	Raceway Assembly

1-72808

4 C

DISCHARGE ASSEMBLY

H422C-B3/5-MV

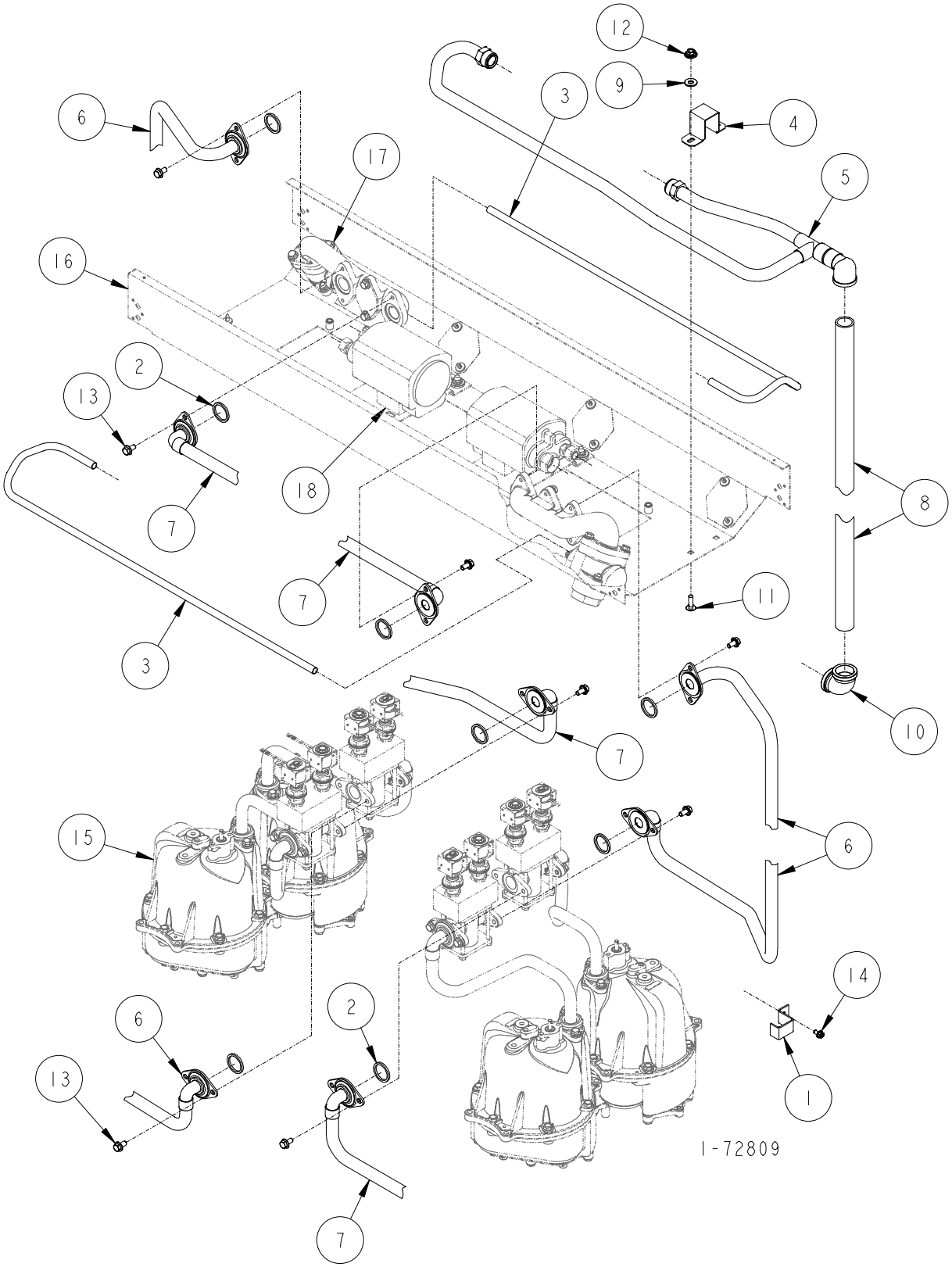

DISCHARGE ASSEMBLY

H422C-B3/5-MV

ITEM NO.	PART NO.	DESCRIPTION
1	1-231856	Discharge Tube Bracket
2	13-313235	Gasket
3	1-321135	Vapor Inlet Tube
4	1-321154	Down Pipe Bracket
5	1-422630	Vapor Outlet Tube
6	1-422732	Fuel Discharge Tube
7	1-422733	Fuel Discharge Tube
8	335-50510	1-1/2" x 81-1/2" Long Pipe
9	03-50611	5/16 Plate Washer
10	06-51700	1" x 90° Elbow - Banded (Remote Control)
	2-319405	Offset Tee (Suction System)
11	39-52198	5/16-18 x 1" Long Carriage Bolt
12	02-54752	5/16-18 M-F Flange Whiz Lock Nut
13	35-55132	5/16-18 x 5/8" Long M-F Flange Whiz Lock Screw
14	69-55392	1/4 x 1/2" Long Hex Washer Head Tapping Screw
15	For parts call out of Meter & Hydraulics Assembly see 72728.	
16	For parts call out of Chassis Assembly see 72724.	
17	For parts call out of Outlet Adapter Assembly see 72762.	
18	For parts call out of MaxVac Assembly see 72751.	

Reference for Tokheim internal use only:

321170	Fuel Tube Hydraulic Assembly
422624	Raceway Assembly

1-72809

4
C

DISCHARGE ASSEMBLY

H424C-MV & H424D-MV

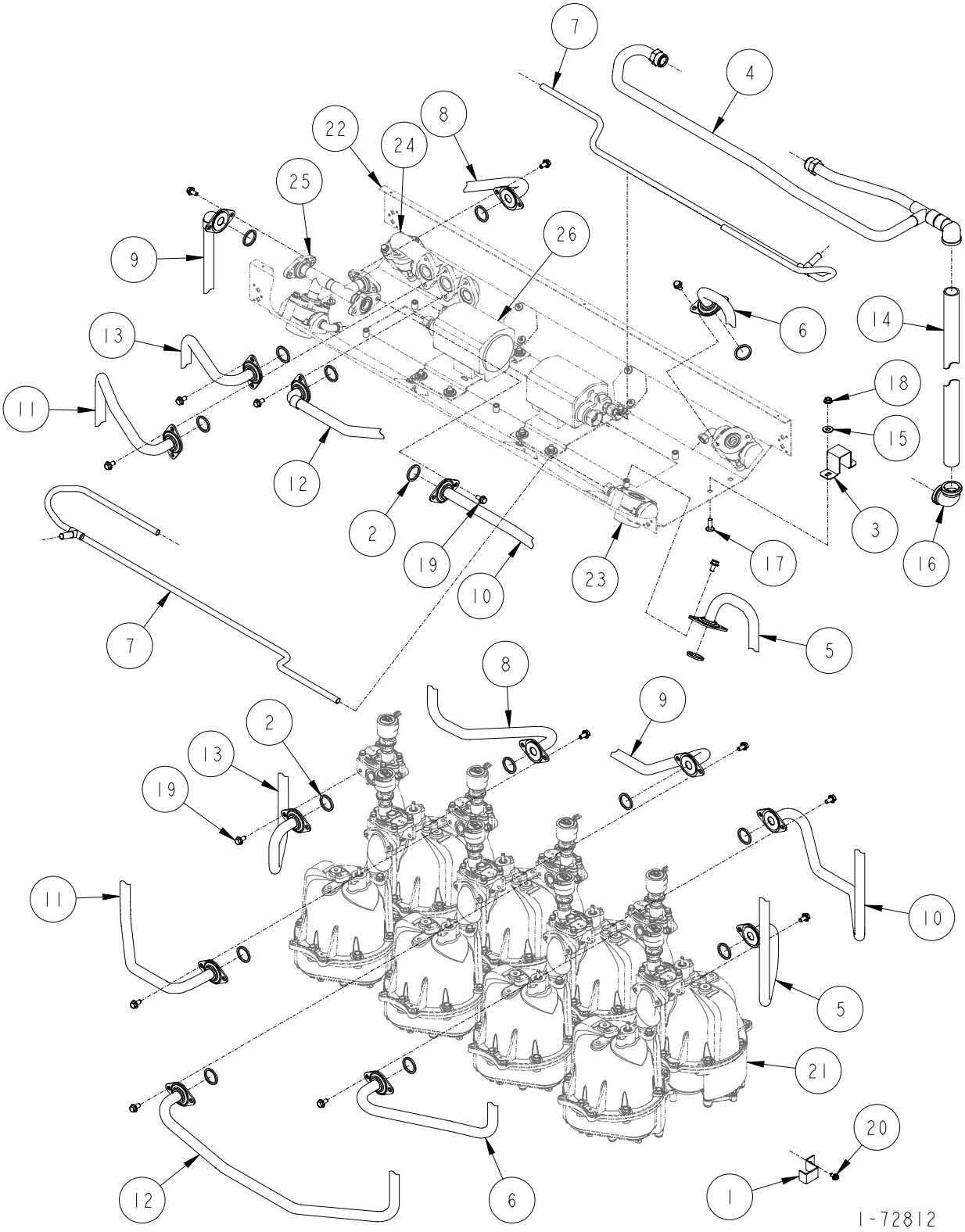

DISCHARGE ASSEMBLY

H424C-MV & H424D-MV

ITEM NO.	PART NO.	DESCRIPTION
1	1-231856	Discharge Tube Bracket
2	13-313235	Gasket
3	1-321154	Down Pipe Bracket
4	1-422630	Vapor Outlet Tube
5	1-422641	Fuel Discharge Tube
6	1-422642	Fuel Discharge Tube
7	3-422683	Vapor Inlet Manifold
8	1-422697	Fuel Discharge Tube
9	1-422698	Fuel Discharge Tube
10	1-422699	Fuel Discharge Tube
11	1-422700	Fuel Discharge Tube
12	1-422701	Fuel Discharge Tube
13	1-422729	Fuel Discharge Tube
14	335-50510	1-1/2" x 81-1/2" Long Pipe
15	03-50611	5/16 Plate Washer
15	06-51700	1" x 90° Elbow - Banded
17	39-52198	5/16-18 x 1" Long Carriage Bolt
18	02-54752	5/16-18 M-F Flange Whiz Lock Nut
19	35-55132	5/16-18 x 5/8" Long M-F Flange Whiz Lock Screw
20	69-55392	1/4 x 1/2" Long Hex Washer Head Tapping Screw
21	For parts call out of Meter & Hydraulics Assembly see 72726.	
22	For parts call out of Chassis Assembly see 72724.	
23	For parts call out of Outlet Adapter Assembly see 72753.	
24	For parts call out of Outlet Adapter Assembly see 72762.	
25	For parts call out of Outlet Adapter Assembly see 72820.	
26	For parts call out of MaxVac Assembly see 72751.	

Reference for Tokheim internal use only:

321170	Fuel Tube Hydraulic Assembly
422624	Raceway Assembly

1-72812

4
C

DISCHARGE ASSEMBLY

H424C-TL & H424D-TL

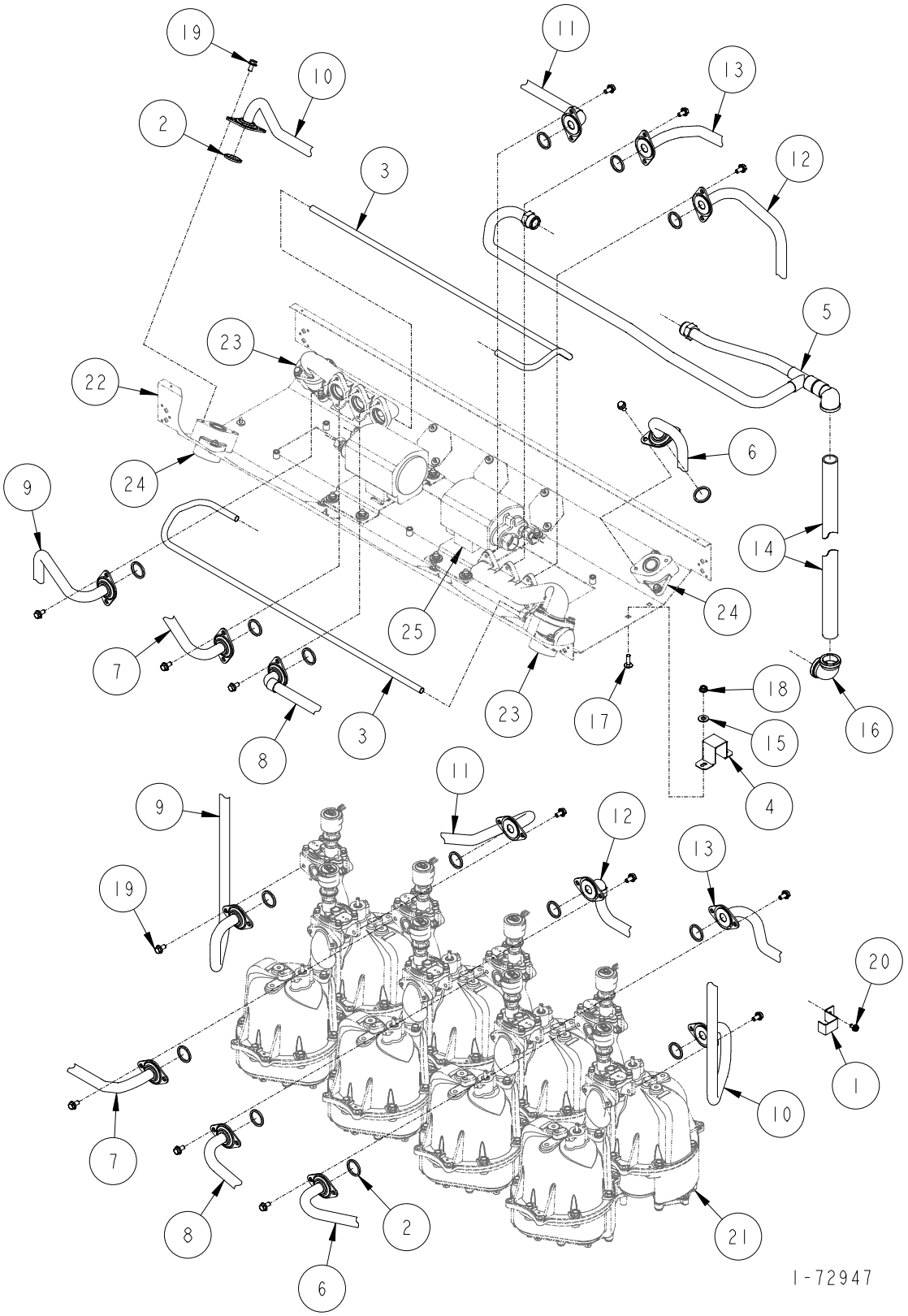

DISCHARGE ASSEMBLY

H424C-TL & H424D-TL

ITEM NO.	PART NO.	DESCRIPTION
1	1-231856	Discharge Tube Bracket
2	13-313235	Gasket
3	1-321135	Vapor Inlet Manifold
4	1-321154	Down Pipe Bracket
5	1-422630	Vapor Outlet Tube
6	1-422642	Fuel Discharge Tube
7	1-422700	Fuel Discharge Tube
8	1-422701	Fuel Discharge Tube
9	1-422729	Fuel Discharge Tube
10	1-422832	Fuel Discharge Tube
11	1-422854	Fuel Discharge Tube
12	1-422855	Fuel Discharge Tube
13	1-422856	Fuel Discharge Tube
14	335-50510	1-1/2" x 81-1/2" Long Pipe
15	03-50611	5/16 Plate Washer
16	06-51700	1" x 90° Elbow - Banded
17	39-52198	5/16-18 x 1" Long Carriage Bolt
18	02-54752	5/16-18 M-F Flange Whiz Lock Nut
19	35-55132	5/16-18 x 5/8" Long M-F Flange Whiz Lock Screw
20	69-55392	1/4 x 1/2" Long Hex Washer Head Tapping Screw
21	For parts call out of Meter & Hydraulics Assembly see 72726.	
22	For parts call out of Chassis Assembly see 72724.	
23	For parts call out of Outlet Adapter Assembly see 72762.	
24	For parts call out of Outlet Adapter Assembly see 72763.	
25	For parts call out of MaxVac Assembly see 72751.	

Reference for Tokheim internal use only:

321170	Fuel Tube Hydraulic Assembly
422624	Raceway Assembly

1-72947

4
C

DISCHARGE ASSEMBLY

H424C-TR & H424D-TR

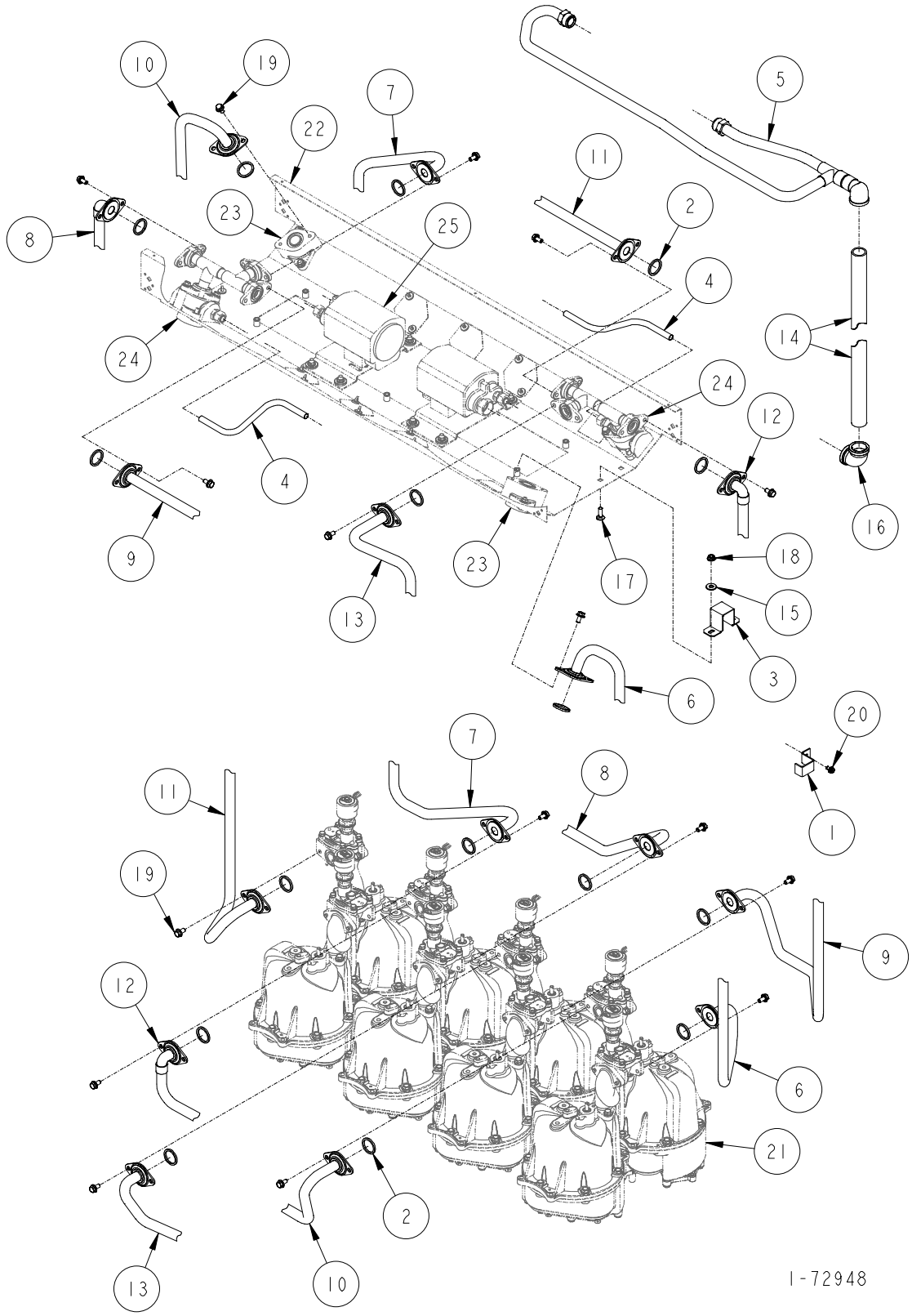

DISCHARGE ASSEMBLY

H424C-TR & H424D-TR

ITEM NO.	PART NO.	DESCRIPTION
1	1-231856	Discharge Tube Bracket
2	13-313235	Gasket
3	1-321154	Down Pipe Bracket
4	1-321281	Vapor Inlet Manifold
5	1-422630	Vapor Outlet Tube
6	1-422641	Fuel Discharge Tube
7	1-422697	Fuel Discharge Tube
8	1-422698	Fuel Discharge Tube
9	1-422699	Fuel Discharge Tube
10	1-422975	Fuel Discharge Tube
11	1-422976	Fuel Discharge Tube
12	1-422977	Fuel Discharge Tube
13	1-422978	Fuel Discharge Tube
14	335-50510	1-1/2" x 81-1/2" Long Pipe
15	03-50611	5/16 Plate Washer
16	06-51700	1" x 90° Elbow - Banded
17	39-52198	5/16-18 x 1" Long Carriage Bolt
18	02-54752	5/16-18 M-F Flange Whiz Lock Nut
19	35-55132	5/16-18 x 5/8" Long M-F Flange Whiz Lock Screw
20	69-55392	1/4 x 1/2" Long Hex Washer Head Tapping Screw
21	For parts call out of Meter & Hydraulics Assembly see 72726.	
22	For parts call out of Chassis Assembly see 72724.	
23	For parts call out of Outlet Adapter Assembly see 72763.	
24	For parts call out of Outlet Adapter Assembly see 72820.	
25	For parts call out of MaxVac Assembly see 72751.	

Reference for Tokheim internal use only:

321170	Fuel Tube Hydraulic Assembly
422624	Raceway Assembly

1-72948

4
C

DISCHARGE ASSEMBLY

H424C-B3/4-MV

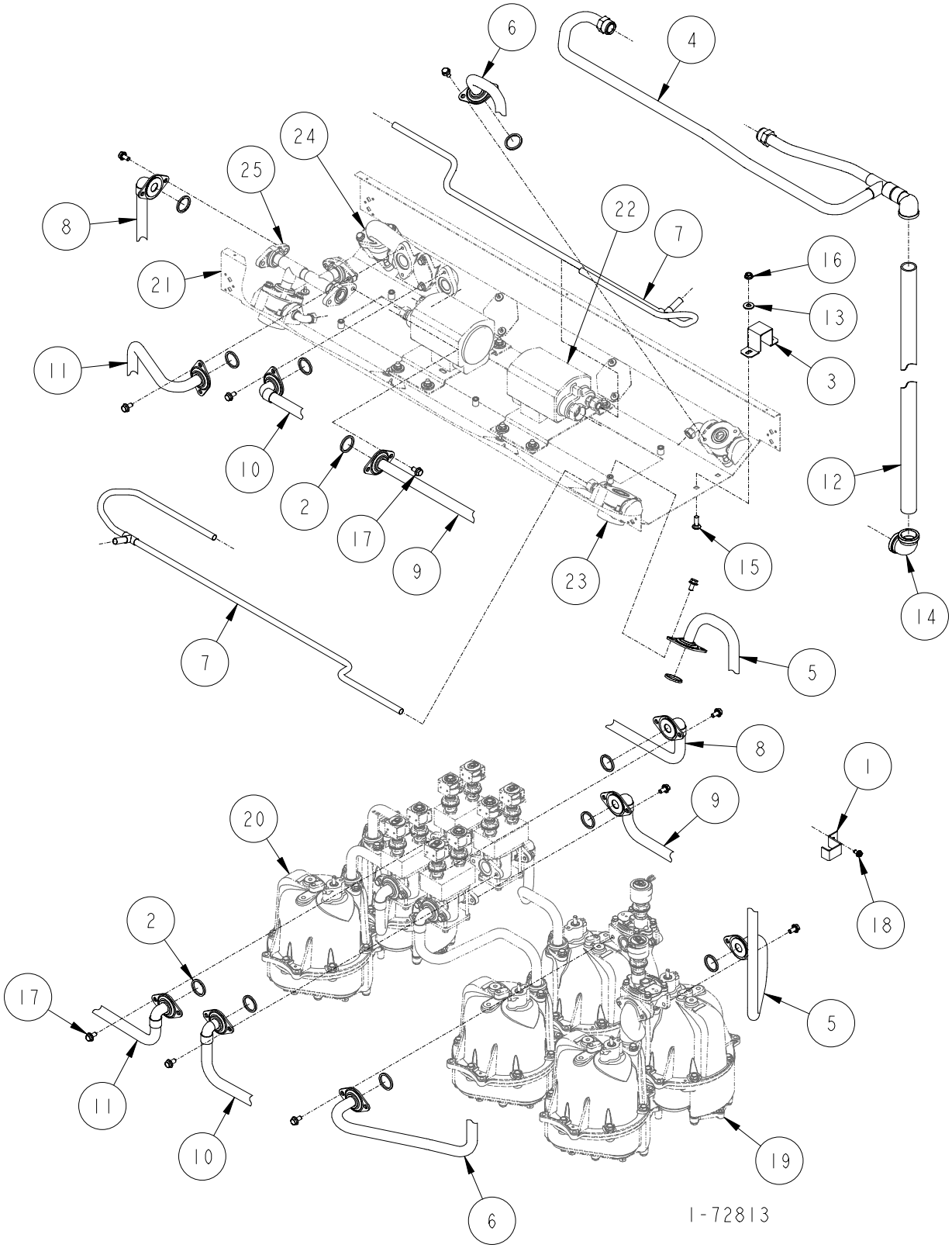

DISCHARGE ASSEMBLY

H424C-B3/4-MV

ITEM NO.	PART NO.	DESCRIPTION
1	1-231856	Discharge Tube Bracket
2	13-313235	Gasket
3	1-321154	Down Pipe Bracket
4	1-422630	Vapor Outlet Tube
5	1-422641	Fuel Discharge Tube
6	1-422642	Fuel Discharge Tube
7	4-422683	Vapor Inlet Manifold
8	1-422702	Fuel Discharge Tube
9	1-422703	Fuel Discharge Tube
10	1-422704	Fuel Discharge Tube
11	1-422732	Fuel Discharge Tube
12	335-50510	1-1/2" x 81-1/2" Long Pipe
13	03-50611	5/16" Plate Washer
14	06-51700	1" x 90° Elbow - Banded (Remote Control)
	2-319405	Offset Tee (Suction System)
15	39-52198	5/16-18 x 1" Long Carriage Bolt
16	02-54752	5/16-18 M-F Flange Whiz Lock Nut
17	35-55132	5/16-18 x 5/8" Long M-F Flange Whiz Lock Screw
18	69-55392	1/4 x 1/2" Long Hex Washer Head Tapping Screw
19	For parts call out of Meter & Hydraulics Assembly see 72726.	
20	For parts call out of Meter & Hydraulics Assembly see 72728.	
21	For parts call out of Chassis Assembly see 72724.	
22	For parts call out of MaxVac Assembly see 72751.	
23	For parts call out of Outlet Adapter Assembly see 72753.	
24	For parts call out of Outlet Adapter Assembly see 72762.	
25	For parts call out of Outlet Adapter Assembly see 72820.	

Reference for Tokheim internal use only:

321170	Fuel Tube Hydraulic Assembly
422624	Raceway Assembly

1-72813

4
C

DISCHARGE ASSEMBLY

H424C-B3/4-TL

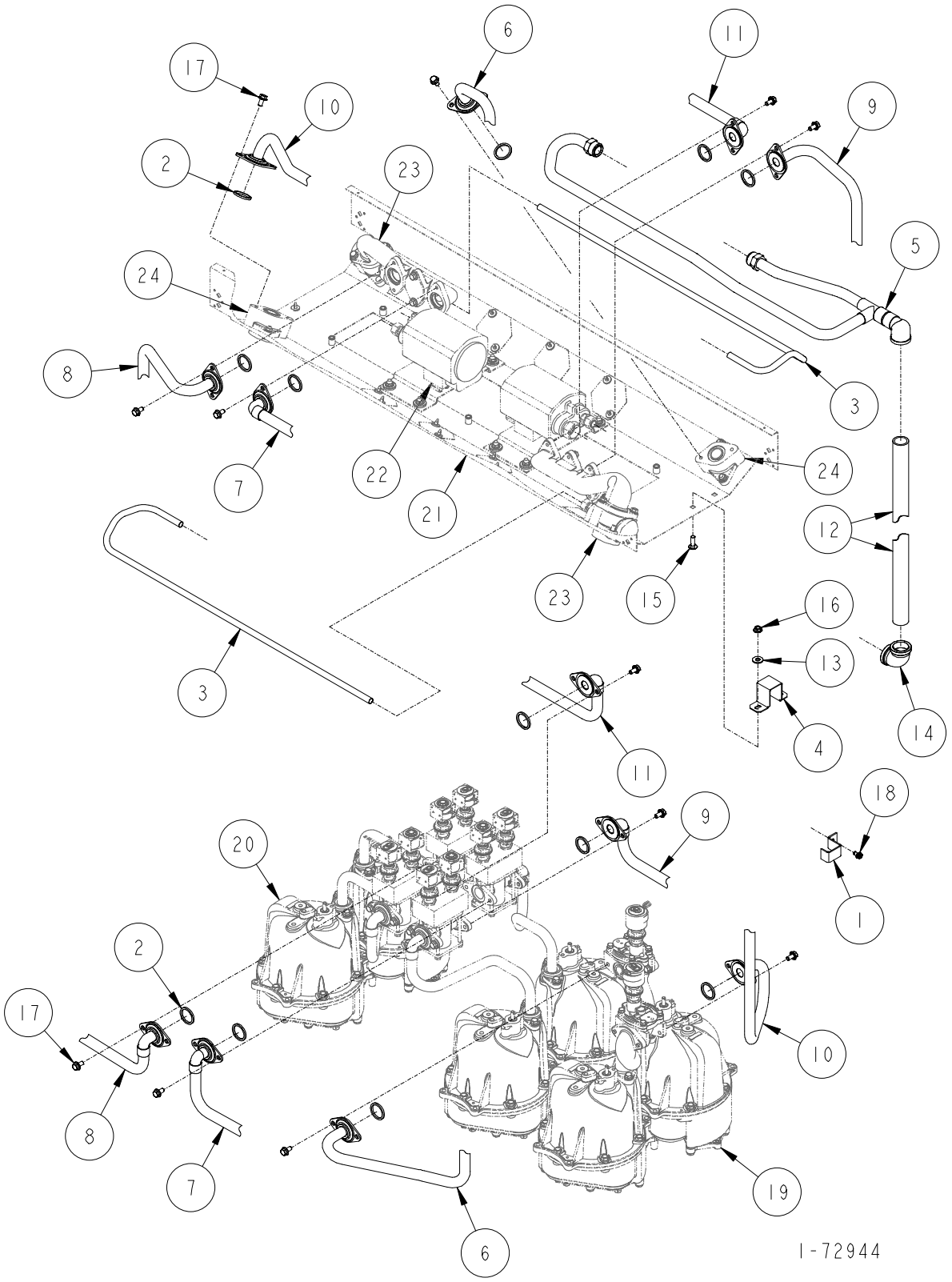

DISCHARGE ASSEMBLY

H424C-B3/4-TL

ITEM NO.	PART NO.	DESCRIPTION
1	1-231856	Discharge Tube Bracket
2	13-313235	Gasket
3	1-321135	Vapor Inlet Manifold
4	1-321154	Down Pipe Bracket
5	1-422630	Vapor Outlet Tube
6	1-422642	Fuel Discharge Tube
7	1-422704	Fuel Discharge Tube
8	1-422732	Fuel Discharge Tube
9	1-422831	Fuel Discharge Tube
10	1-422832	Fuel Discharge Tube
11	1-422833	Fuel Discharge Tube
12	335-50510	1-1/2" x 81-1/2" Long Pipe
13	03-50611	5/16" Plate Washer
14	06-51700	1" x 90° Elbow - Banded (Remote Control)
	2-319405	Offset Tee (Suction System)
15	39-52198	5/16-18 x 1" Long Carriage Bolt
16	02-54752	5/16-18 M-F Flange Whiz Lock Nut
17	35-55132	5/16-18 x 5/8" Long M-F Flange Whiz Lock Screw
18	69-55392	1/4 x 1/2" Long Hex Washer Head Tapping Screw
19	For parts call out of Meter & Hydraulics Assembly see 72726.	
20	For parts call out of Meter & Hydraulics Assembly see 72728.	
21	For parts call out of Chassis Assembly see 72724.	
22	For parts call out of MaxVac Assembly see 72751.	
23	For parts call out of Outlet Adapter Assembly see 72762.	
24	For parts call out of Outlet Adapter Assembly see 72763.	

Reference for Tokheim internal use only:

321170	Fuel Tube Hydraulic Assembly
422624	Raceway Assembly

1-72944

4
C

DISCHARGE ASSEMBLY

H424C-B3/4-TR

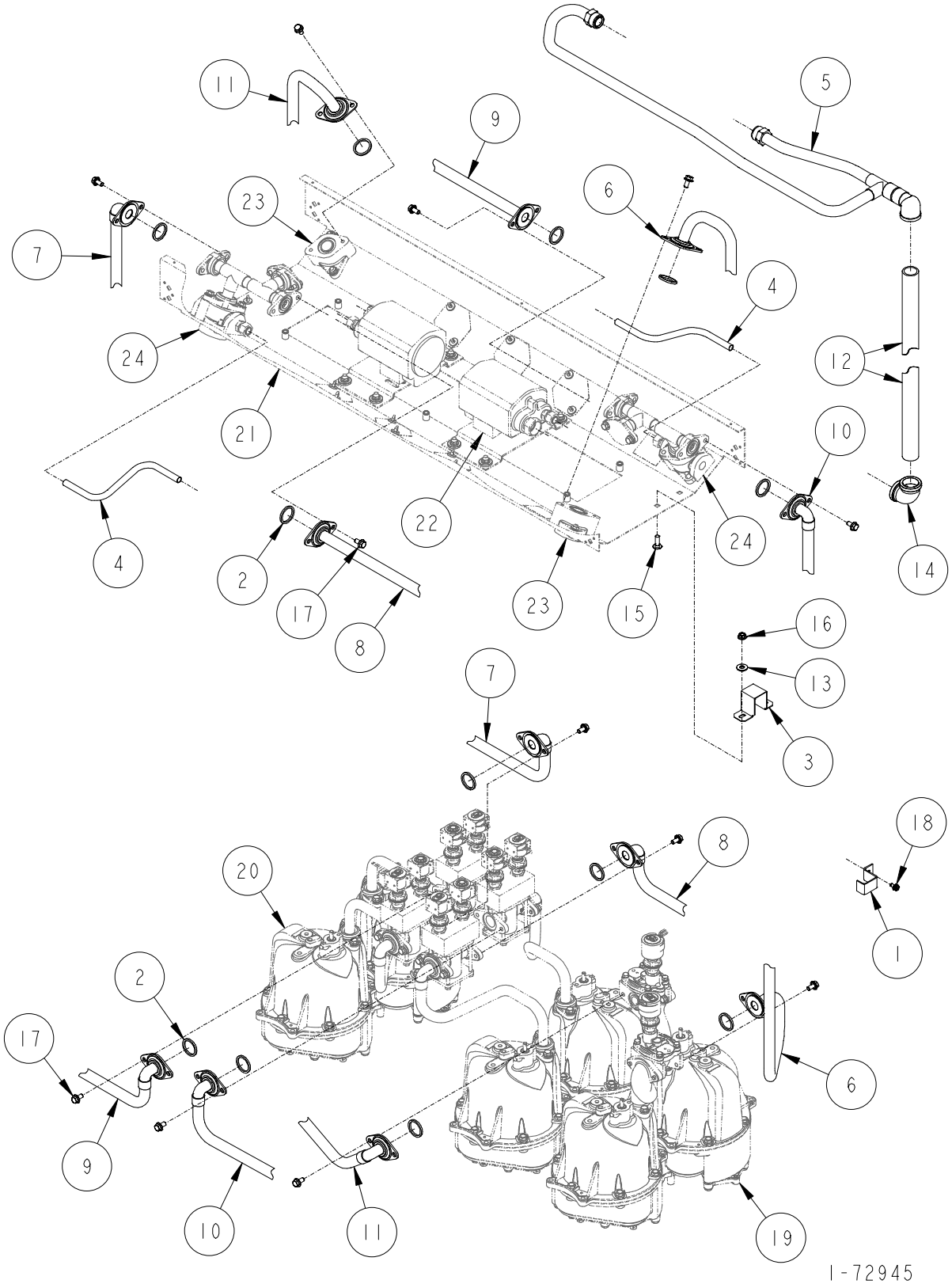

DISCHARGE ASSEMBLY

H424C-B3/4-TR

ITEM NO.	PART NO.	DESCRIPTION
1	1-231856	Discharge Tube Bracket
2	13-313235	Gasket
3	1-321154	Down Pipe Bracket
4	1-321281	Vapor Inlet Tube
5	1-422630	Vapor Outlet Tube
6	1-422641	Fuel Discharge Tube
7	1-422702	Fuel Discharge Tube
8	1-422703	Fuel Discharge Tube
9	1-422844	Fuel Discharge Tube
10	1-422845	Fuel Discharge Tube
11	1-422881	Fuel Discharge Tube
12	335-50510	1-1/2" x 81-1/2" Long Pipe
13	03-50611	5/16" Plate Washer
14	06-51700	1" x 90° Elbow - Banded (Remote Control)
	2-319405	Offset Tee (Suction System)
15	39-52198	5/16-18 x 1" Long Carriage Bolt
16	02-54752	5/16-18 M-F Flange Whiz Lock Nut
17	35-55132	5/16-18 x 5/8" Long M-F Flange Whiz Lock Screw
18	69-55392	1/4 x 1/2" Long Hex Washer Head Tapping Screw
19	For parts call out of Meter & Hydraulics Assembly see 72726.	
20	For parts call out of Meter & Hydraulics Assembly see 72728.	
21	For parts call out of Chassis Assembly see 72724.	
22	For parts call out of MaxVac Assembly see 72751.	
23	For parts call out of Outlet Adapter Assembly see 72763.	
24	For parts call out of Outlet Adapter Assembly see 72820.	

Reference for Tokheim internal use only:

321170	Fuel Tube Hydraulic Assembly
422624	Raceway Assembly

1-72945

DISCHARGE ASSEMBLY

H424C-B3/4-MN

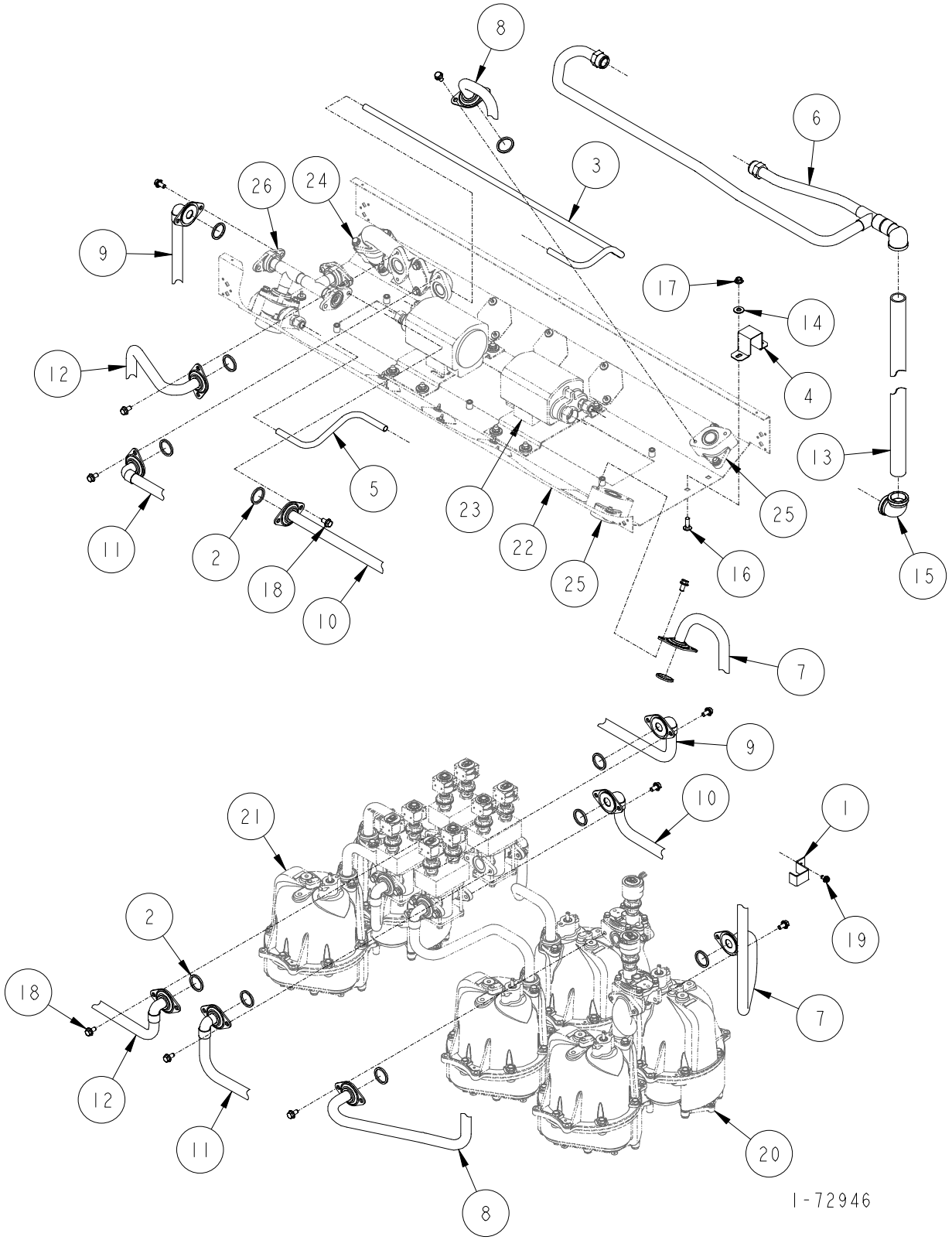

DISCHARGE ASSEMBLY

H424C-B3/4-MN

ITEM NO.	PART NO.	DESCRIPTION
1	1-231856	Discharge Tube Bracket
2	13-313235	Gasket
3	1-321135	Vapor Inlet Tube
4	1-321154	Down Pipe Bracket
5	1-321281	Vapor Inlet Tube
6	1-422630	Vapor Outlet Tube
7	1-422641	Fuel Discharge Tube
8	1-422642	Fuel Discharge Tube
9	1-422702	Fuel Discharge Tube
10	1-422703	Fuel Discharge Tube
11	1-422704	Fuel Discharge Tube
12	1-422732	Fuel Discharge Tube
13	335-50510	1-1/2" x 81-1/2" Long Pipe
14	03-50611	5/16" Plate Washer
15	06-51700	1" x 90° Elbow - Banded (Remote Control)
	2-319405	Offset Tee (Suction System)
16	39-52198	5/16-18 x 1" Long Carriage Bolt
17	02-54752	5/16-18 M-F Flange Whiz Lock Nut
18	35-55132	5/16-18 x 5/8" Long M-F Flange Whiz Lock Screw
19	69-55392	1/4 x 1/2" Long Hex Washer Head Tapping Screw
20	For parts call out of Meter & Hydraulics Assembly see 72726.	
21	For parts call out of Meter & Hydraulics Assembly see 72728.	
22	For parts call out of Chassis Assembly see 72724.	
23	For parts call out of MaxVac Assembly see 72751.	
24	For parts call out of Outlet Adapter Assembly see 72762.	
25	For parts call out of Outlet Adapter Assembly see 72763.	
26	For parts call out of Outlet Adapter Assembly see 72820.	

Reference for Tokheim internal use only:

321170	Fuel Tube Hydraulic Assembly
422624	Raceway Assembly

1-72946

DISCHARGE ASSEMBLY

H426C-MV & H426D-MV

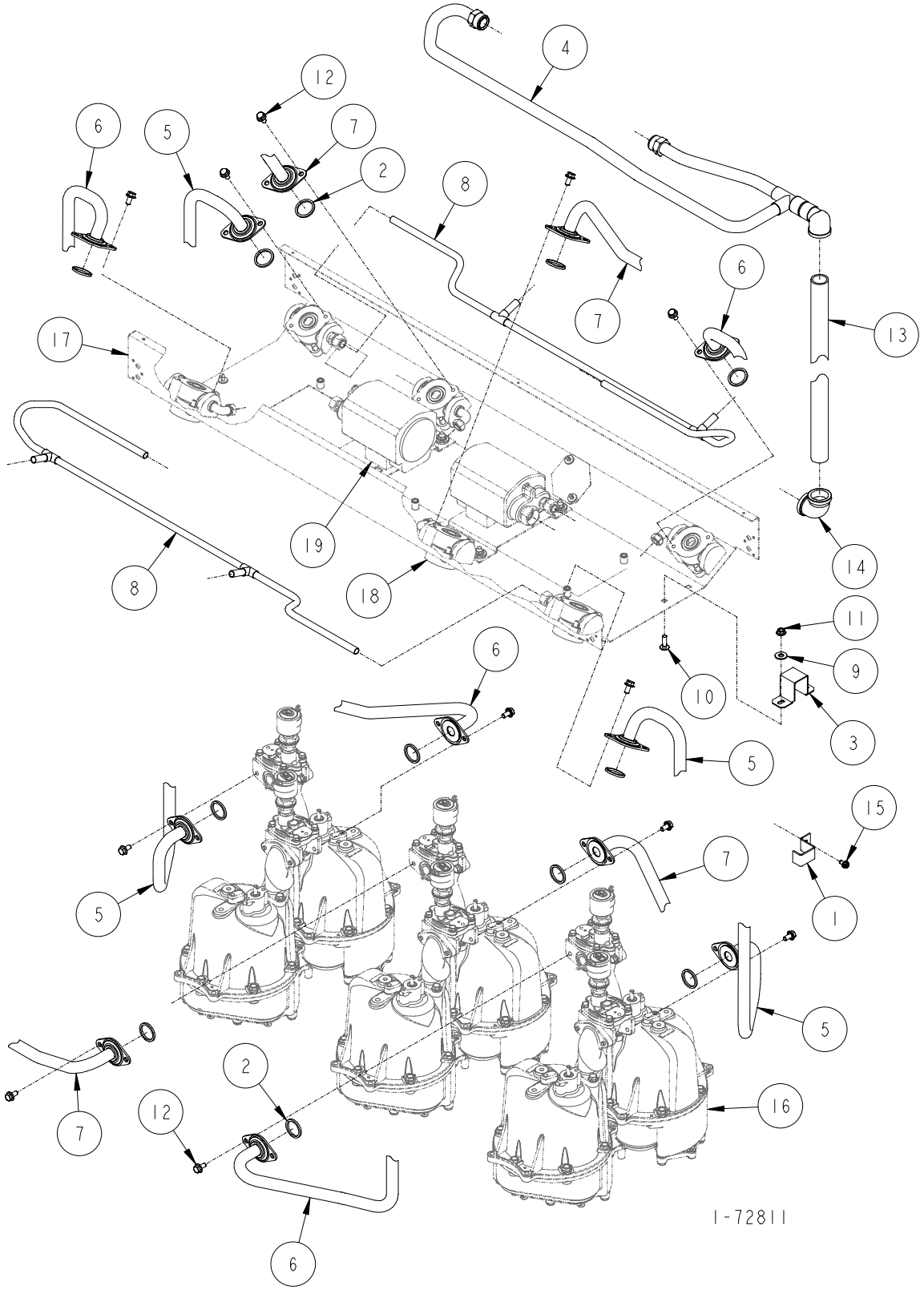

DISCHARGE ASSEMBLY

H426C-MV & H426D-MV

ITEM NO.	PART NO.	DESCRIPTION
1	1-231856	Discharge Tube Bracket
2	13-313235	Gasket
3	1-321154	Down Pipe Bracket
4	1-422630	Vapor Outlet Tube
5	1-422641	Fuel Discharge Tube
6	1-422642	Fuel Discharge Tube
7	1-422643	Fuel Discharge Tube
8	2-422683	Vapor Inlet Manifold
9	03-50611	5/16 Plate Washer
10	39-52198	5/16-18 x 1" Long Carriage Bolt
11	02-54752	5/16-18 M-F Flange Whiz Lock Nut
12	35-55132	5/16-18 x 5/8" Long M-F Flange Whiz Lock Screw
13	335-50510	1-1/2" x 81-1/2" Long Pipe
14	06-51700	1" x 90° Elbow - Banded (Remote Control)
	2-319405	Offset Tee (Suction System)
15	69-55392	1/4 x 1/2" Long Hex Washer Head Tapping Screw
16	For parts call out of Meter & Hydraulics Assembly see 72726.	
17	For parts call out of Chassis Assembly see 72724.	
18	For parts call out of Outlet Adapter Assembly see 72753.	
19	For parts call out of MaxVac Assembly see 72751.	

Reference for Tokheim internal use only:

321170	Fuel Tube Hydraulic Assembly
422624	Raceway Assembly

1-72811

4 C

DISCHARGE ASSEMBLY

H426C-EB-MV

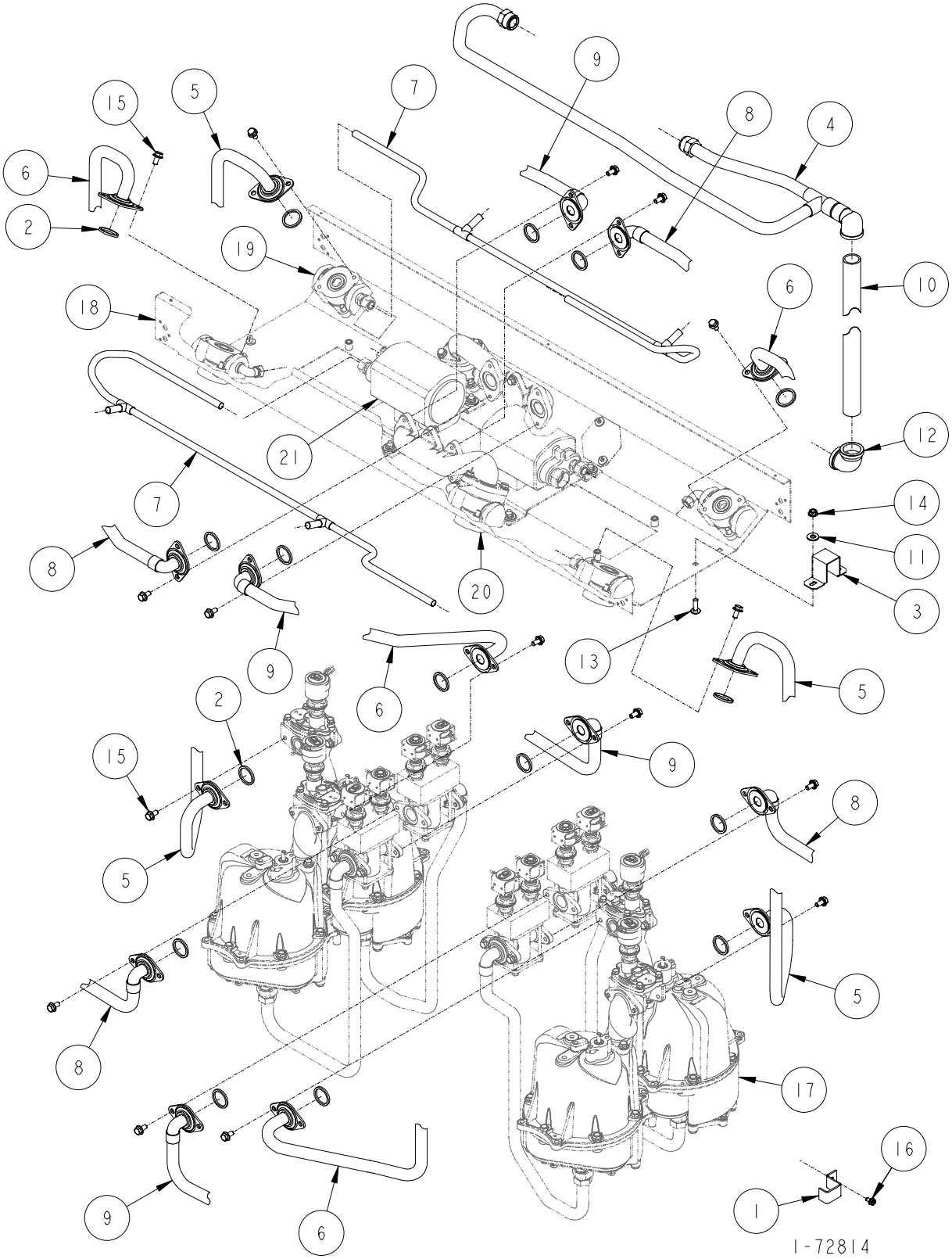

DISCHARGE ASSEMBLY

H426C-EB-MV

ITEM NO.	PART NO.	DESCRIPTION
1	1-231856	Discharge Tube Bracket
2	13-313235	Gasket
3	1-321154	Down Pipe Bracket
4	1-422630	Vapor Outlet Tube
5	1-422641	Fuel Discharge Tube
6	1-422642	Fuel Discharge Tube
7	2-422683	Vapor Inlet Manifold
8	1-422706	Fuel Discharge Tube
9	1-422707	Fuel Discharge Tube
10	335-50510	1-1/2" x 81-1/2" Long Pipe
11	03-50611	5/16 Plate Washer
12	06-51700	1" x 90° Elbow - Banded (Remote Control)
	2-319405	Offset Tee (Suction System)
13	39-52198	5/16-18 x 1" Long Carriage Bolt
14	02-54752	5/16-18 M-F Flange Whiz Lock Nut
15	35-55132	5/16-18 x 5/8" Long M-F Flange Whiz Lock Screw
16	69-55392	1/4 x 1/2" Long Hex Washer Head Tapping Screw
17	For parts call out of Meter & Hydraulics Assembly see 72729.	
18	For parts call out of Chassis Assembly see 72724.	
19	For parts call out of Outlet Adapter Assembly see 72753.	
20	For parts call out of Outlet Adapter Assembly see 72762.	
21	For parts call out of MaxVac Assembly see 72751.	

Reference for Tokheim internal use only:

321170	Fuel Tube Hydraulic Assembly
422624	Raceway Assembly

1-72814

4C

DISCHARGE ASSEMBLY

H428C-MV & H428D-MV

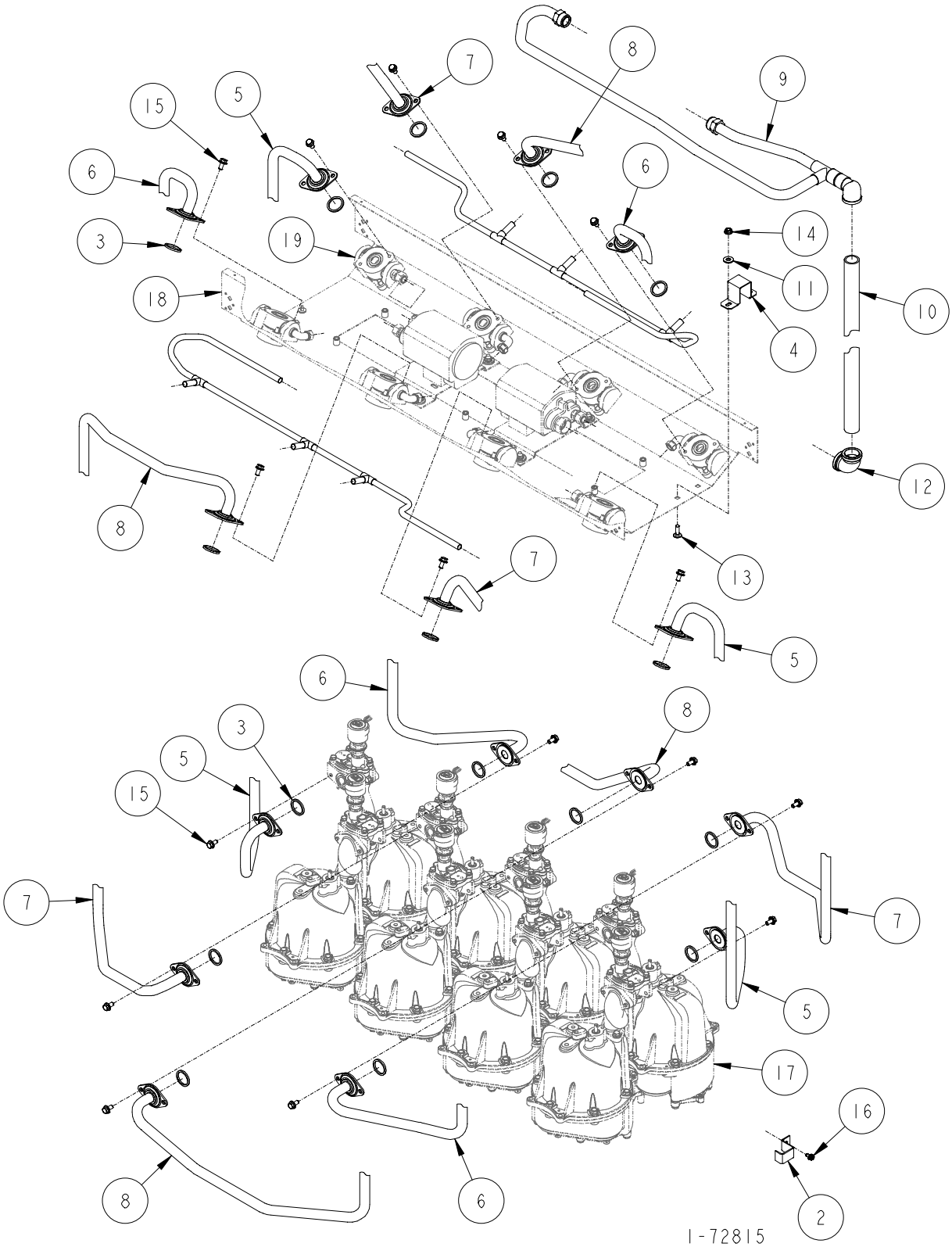

DISCHARGE ASSEMBLY

H428C-MV & H428D-MV

ITEM NO.	PART NO.	DESCRIPTION
1	1-231856	Discharge Tube Bracket
2	13-313235	Gasket
3	1-321154	Down Pipe Bracket
4	1-422630	Vapor Inlet Tube
5	1-422641	Fuel Discharge Tube
6	1-422642	Fuel Discharge Tube
7	1-422683	Vapor Inlet Manifold
8	1-422694	Fuel Discharge Tube
9	1-422695	Fuel Discharge Tube
10	335-50510	1-1/2" x 81-1/2" Long Pipe
11	03-50611	5/16" Plate Washer
12	06-51700	1" x 90° Elbow - Banded
13	39-52198	5/16-18 x 1" Long Carriage Bolt
14	02-54752	5/16-18 M-F Flange Whiz Lock Nut
15	35-55132	5/16-18 x 5/8" Long M-F Flange Whiz Lock Screw
16	69-55392	1/4 x 1/2" Long Hex Washer Head Tapping Screw
17	For parts call out of Meter & Hydraulics Assembly see 72726.	
18	For parts call out of Chassis Assembly see 72724.	
19	For parts call out of Outlet Adapter Assembly see 72753.	
20	For parts call out of MaxVac Assembly see 72751.	

Reference for Tokheim internal use only:

321170	Fuel Tube Hydraulic Assembly
422624	Raceway Assembly

1-72815

DISCHARGE ASSEMBLY

H428C-EB-MV

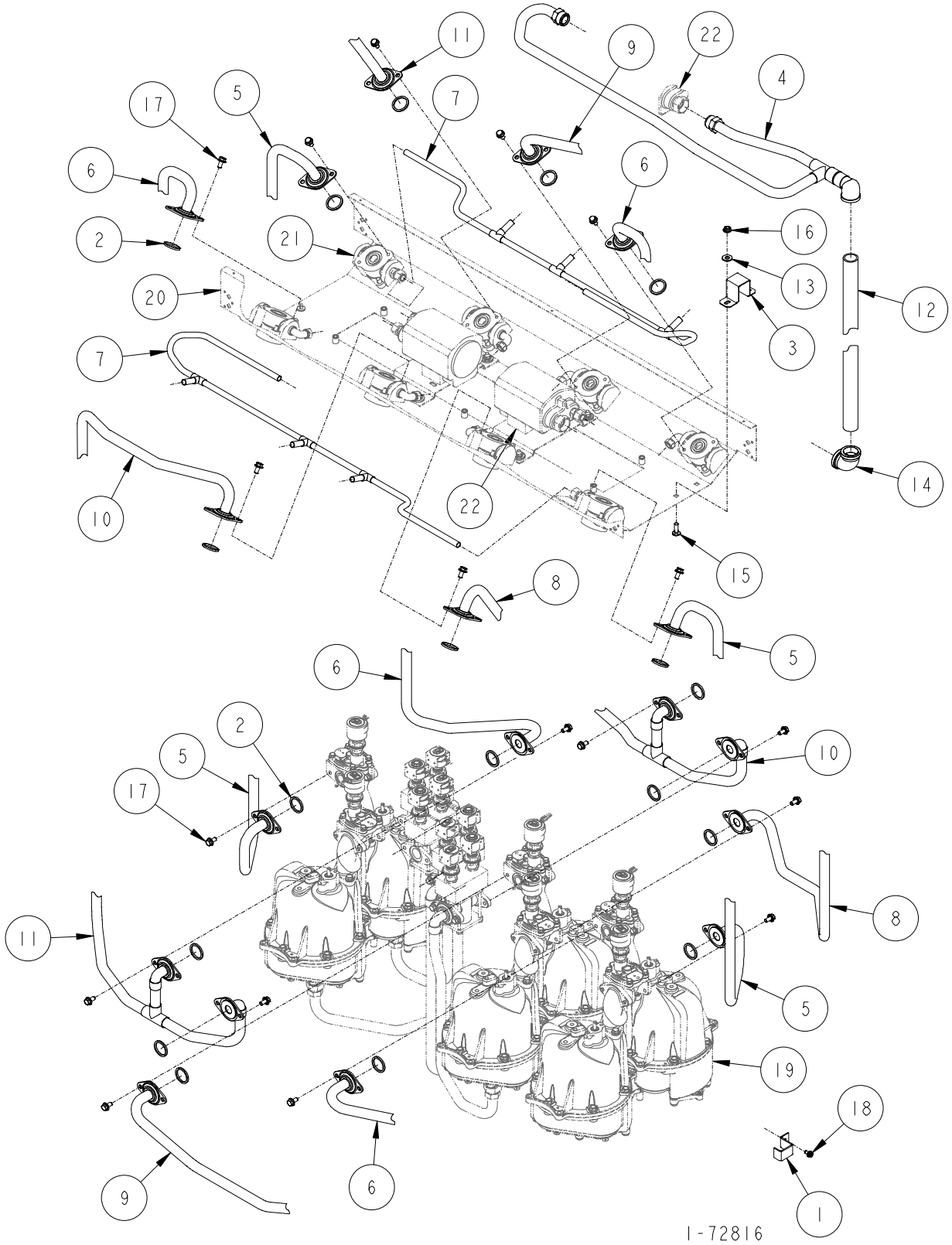

DISCHARGE ASSEMBLY

H428C-EB-MV

ITEM NO.	PART NO.	DESCRIPTION
1	1-231856	Discharge Tube Bracket
2	13-313235	Gasket
3	1-321154	Down Pipe Bracket
4	1-422630	Vapor Inlet Tube
5	1-422641	Fuel Discharge Tube
6	1-422642	Fuel Discharge Tube
7	1-422683	Vapor Inlet Manifold
8	1-422694	Fuel Discharge Tube
9	1-422720	Fuel Discharge Tube
10	1-422721	Fuel Discharge Tube
11	1-422722	Fuel Discharge Tube
12	335-50510	1-1/2" x 81-1/2" Long Pipe
13	03-50611	5/16" Plate Washer
14	06-51700	1" x 90° Elbow - Banded (Remote Control)
	2-319405	Offset Tee (Suction System)
15	39-52198	5/16-18 x 1" Long Carriage Bolt
16	02-54752	5/16-18 M-F Flange Whiz Lock Nut
17	35-55132	5/16-18 x 5/8" Long M-F Flange Whiz Lock Screw
18	69-55392	1/4 x 1/2" Long Hex Washer Head Tapping Screw
19	For parts call out of Meter & Hydraulics Assembly see 72726.	
20	For parts call out of Chassis Assembly see 72724.	
21	For parts call out of Outlet Adapter Assembly see 72753.	
22	For parts call out of MaxVac Assembly see 72751.	

Reference for Tokheim internal use only:

321170	Fuel Tube Hydraulic Assembly
422624	Raceway Assembly

1-72816

4
C

OUTLET ADAPTER ASSEMBLY

(MAXVAC)

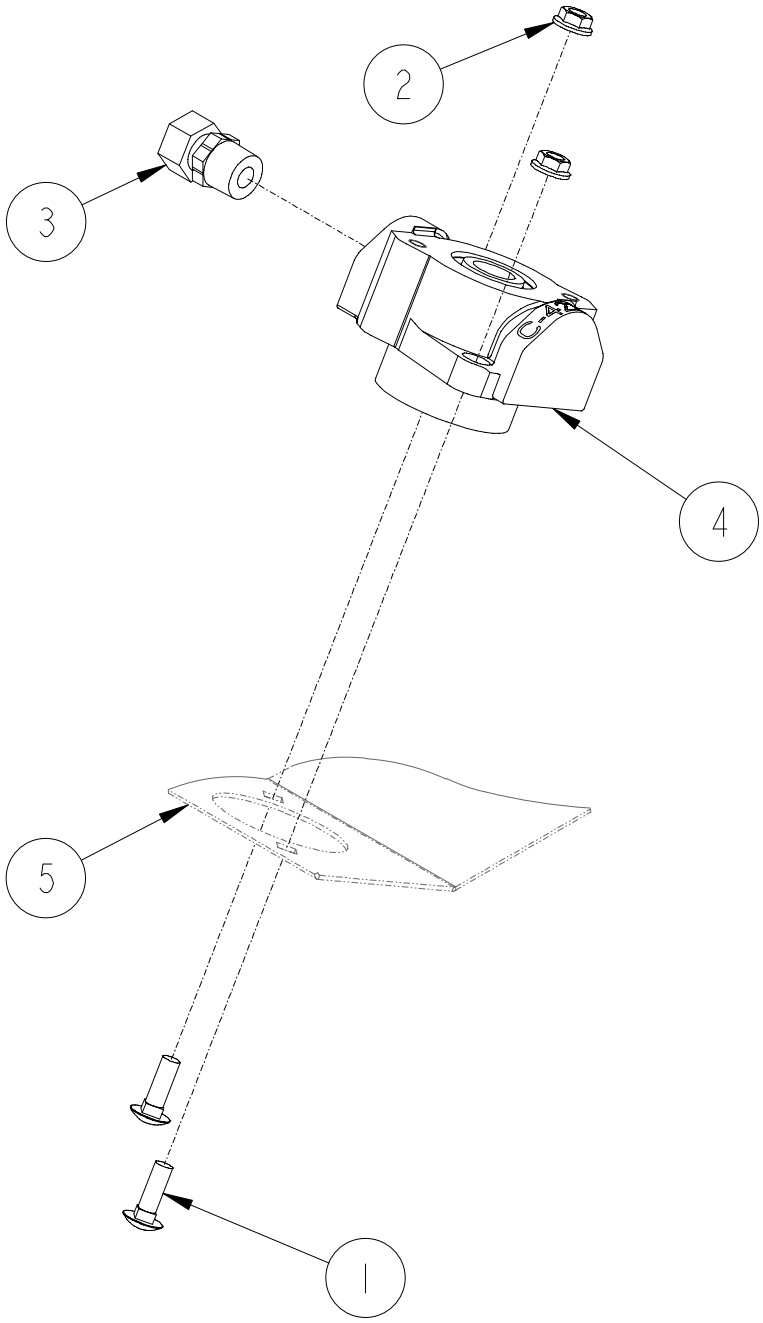

1-72753

OUTLET ADAPTER ASSEMBLY
(MAXVAC)

ITEM NO.	PART NO.	DESCRIPTION
1	39-52198	5/16-18 x 1" Long Carriage Bolt
2	02-54752	5/16-18 M-F Flange Whiz Lock Nut
3	Male	
	1-232281	Elbow
	4-319636	Connector
4	1-422008	Outlet Adapter
5	For parts call out of Chassis Assembly see:	
	72779	H300C & H300D Series
	72724	H400C & H400D Series
	Reference for Tokheim internal use only:	
	422624	Raceway Assembly (H400C & H400D Series)
	422740	Raceway Assembly (H300C & H300D Series)

1-72753

4
C

OUTLET ADAPTER ASSEMBLY
(MAXVAC)

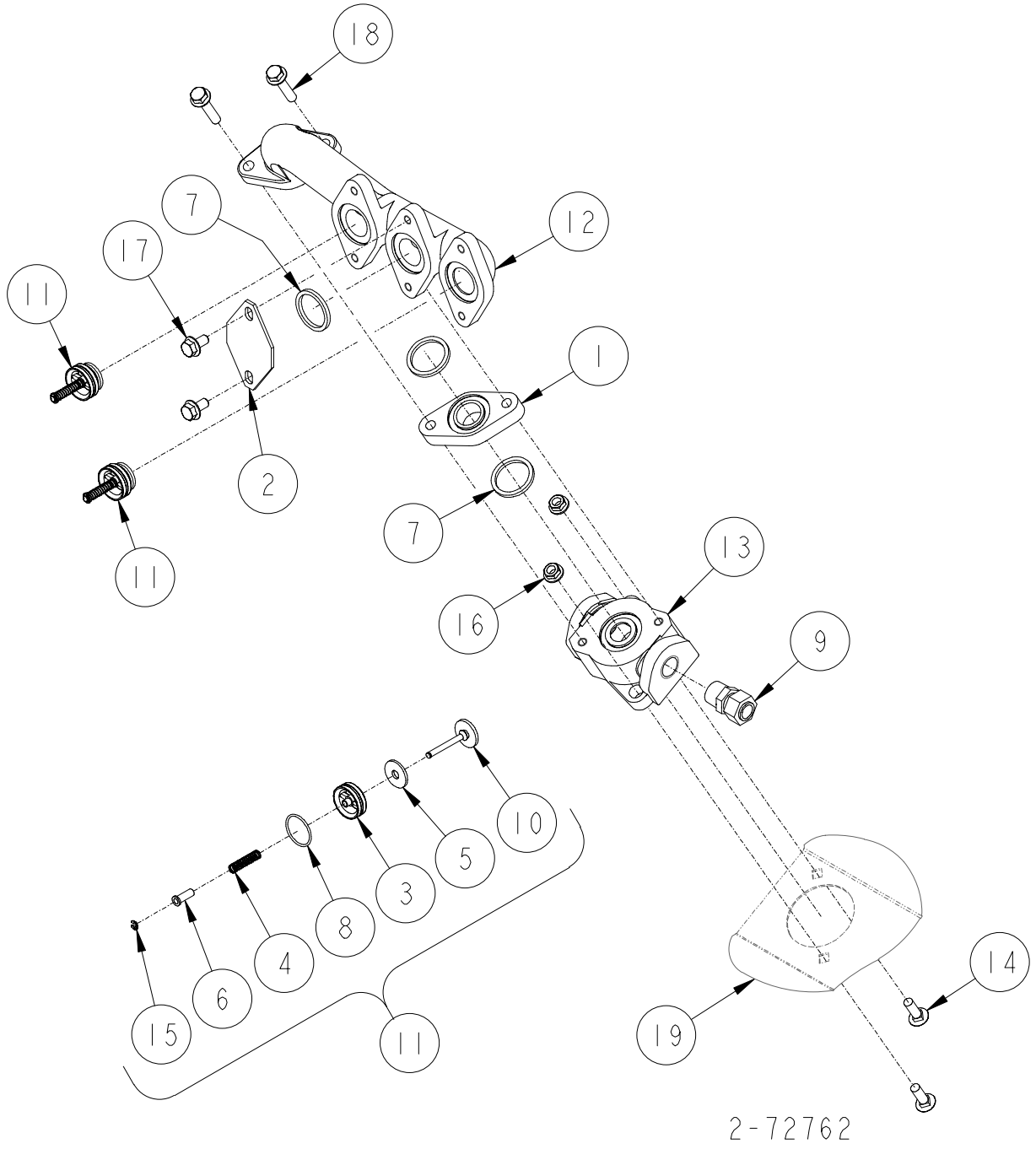

OUTLET ADAPTER ASSEMBLY
(MAXVAC)

ITEM NO.	PART NO.	DESCRIPTION
1	4-227299	Flange (Used with old Outlet Manifold 1-421962 only)
2	1-228345	Manifold Cap
3	Check Valve Seat	
	1-233801	All models except Canada
	2-233801	Canada
4	1-233802	Spring
5	1-233805	Poppet Seal
6	1-233807	Stem Sleeve
7	13-313235	Gasket
8	18-318940	O Ring
9	4-319636	Male Connector
10	Poppet Assembly	
	1-321451	All models except Canada
	2-321451	Canada
11	Check Valve Assembly	
	321452-1	All models except Canada
	321452-2	Canada
12	Outlet Manifold	
	1-421962	Old Design (No longer used)
	1-423000	New Design
13	1-422007	Outlet Adapter
14	39-52198	5/16-18 x 1" Long Carriage Bolt
15	05-52482	Truarc Retaining Ring
16	02-54752	5/16-18 M-F Flange Whiz Lock Nut
17	35-55132	5/16-18 x 5/8" Long M-F Flange Whiz Lock Screw
18	41-55132	M-F Flange Whiz Lock Screw
19	For parts call out of Chassis Assembly see:	
	72779	H300C Series
	72724	H400C Series
	Reference for Tokheim internal use only:	
	422740	Raceway Assembly (H300C & H300D Series)

2-72762

4
C

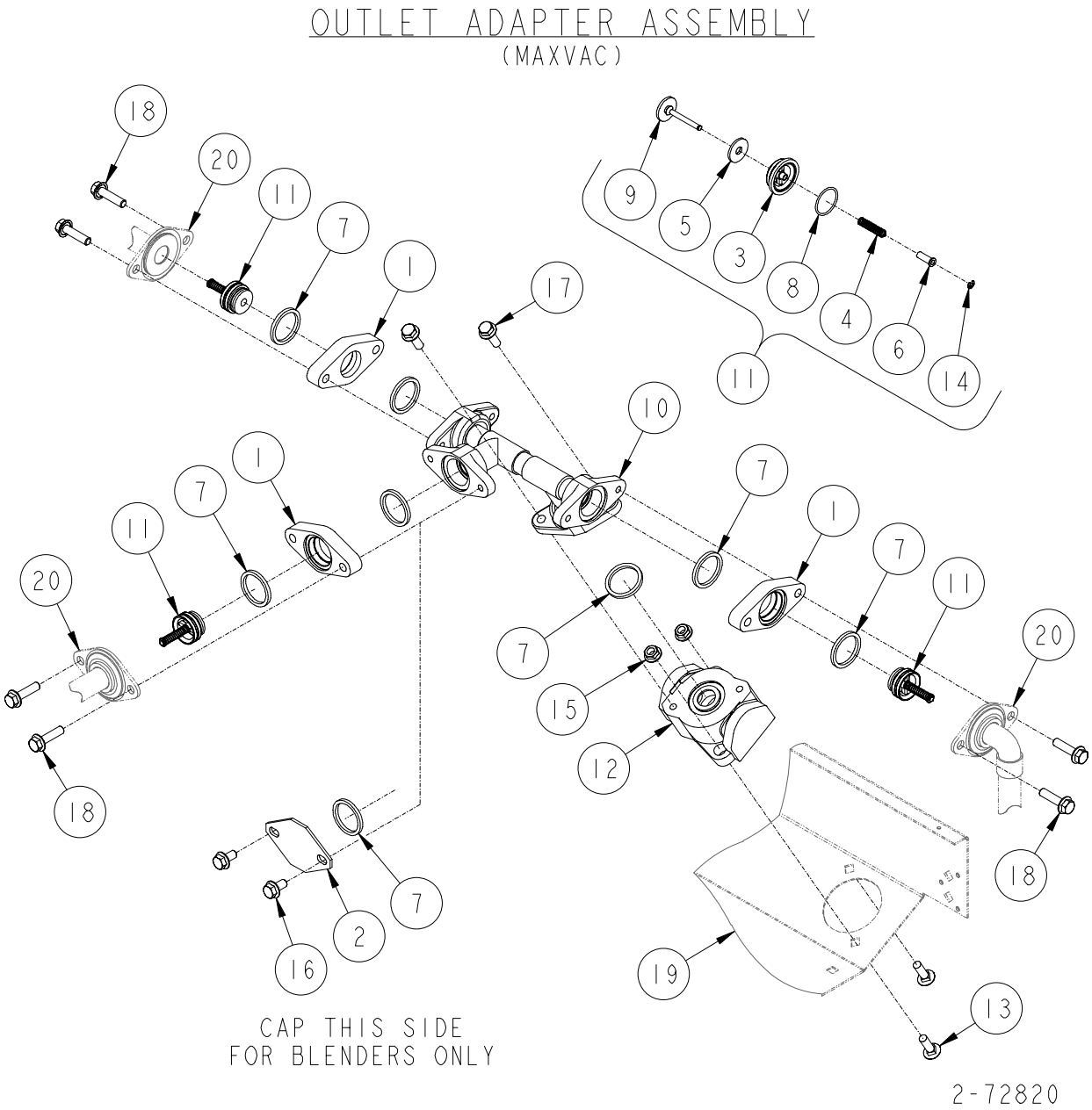
OUTLET ADAPTER ASSEMBLY
(MAXVAC)
18
20
11
7
1
17
9
5
3
8
4
6
14
11
10
1
7
11
20
7
1
7
11
20
7
15
12
18
18
7
2
16
19
13
CAP THIS SIDE
FOR BLENDERS ONLY
2-72820

OUTLET ADAPTER ASSEMBLY
(MAXVAC)

ITEM NO.	PART NO.	DESCRIPTION
1	5-227299	Flange
2	1-228345	Manifold Cap
3	Check Valve Seat	
	1-233801	All models except Canada
	2-233801	Canada
4	1-233802	Spring
5	1-233805	Poppet Seal
6	1-233807	Stem Sleeve
7	13-313235	Gasket
8	18-318940	O Ring
9	Poppet Assembly	
	1-321451	All models except Canada
	2-321451	Canada
10	1-321491	Manifold Assembly
11	Check Valve Assembly	
	321452-1	All models except Canada
	321452-2	Canada
12	1-422008	Outlet Adapter
13	39-52198	5/16-18 x 1" Long Carriage Bolt
14	05-52482	Truarc Retaining Ring
15	02-54752	5/16-18 M-F Flange Whiz Lock Nut
16	35-55132	5/16-18 x 5/8" Long M-F Flange Whiz Lock Screw
17	38-55132	5/16-18 x 1" Long M-F Flange Whiz Lock Screw
18	40-55132	5/16-18 x 1-1/4" Long M-F Flange Whiz Lock Screw
19	For parts call out of Chassis Assembly see 72724	
20	For parts call out of Discharge Assembly see:	
	72801	H424C-IV
	72802	H424C-B3/4-IN/FN
	72803	H424C-B3/4+DEISEL-IV
	72936	H422C-B3/5MR
	72937	H424C-IN/FN
	72939	H424C/D-TRIN/FN
	72941	H424C-B3/4TR-IN/FN
	Reference for Tokheim internal use only:	
	422624	Raceway Assembly (H400C & H400D Series)

2-72820

4
C

OUTLET ADAPTER ASSEMBLY

NON VAPOR

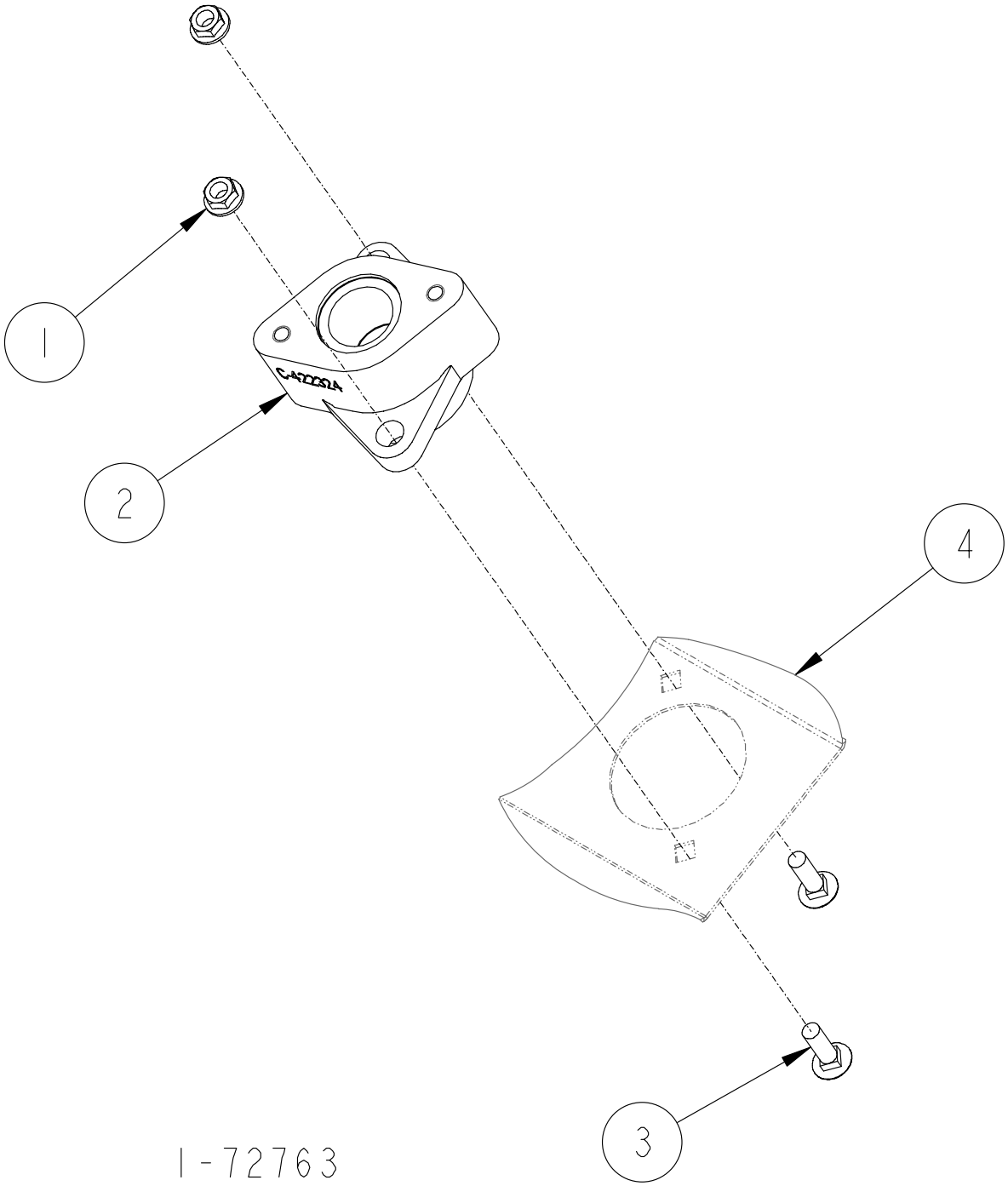

OUTLET ADAPTER ASSEMBLY
(NON VAPOR)

ITEM NO.	PART NO.	DESCRIPTION
1	02-54752	5/16-18 M-F Flange Whiz Lock Nut
2	1-422324	Outlet Adapter
3	39-52198	5/16-18 x 1" Long Carriage Bolt
4	For parts call out of Chassis Assembly see:	
	72779	H300C & H300DSeries
	72724	H400C & H400DSeries
	Reference for Tokheim internal use only:	
	422624	Raceway Assembly (H400C & H400D Series)
	422740	Raceway Assembly (H300C & H300D Series)

1-72763

4
C

MAX VAC ASSEMBLY

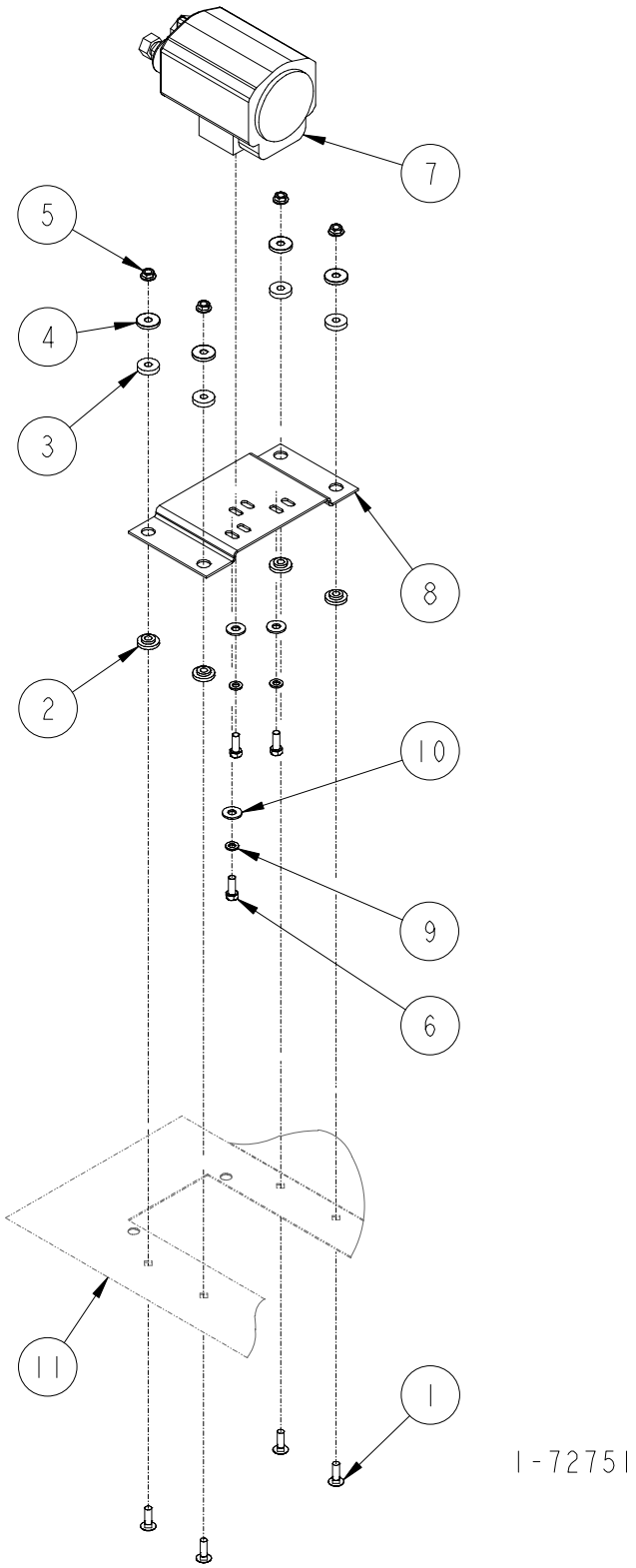

MaxVac ASSEMBLY

ITEM NO.	PART NO.	DESCRIPTION
1	39-52198	5/16-18 x 1" Long Carriage Bolt
2	1-114468	Cushion Grommet
3	1-114469	Cushion Washer
4	1-114470	Cushion Retainer
5	02-54752	5/16-18 M-F Flange Whiz Lock Nut
6	1-132767	M8 x 20mm Long Hex Head Machine Screw
7	3-421736	Vacuum Pump (Includes inlet filter)
	1-232793	Inlet Filter only
8	1-422671	MaxVac Pump Bracket
9	14-50641	5/16" Lockwasher
10	03-50611	5/16" Plate Washer
11	For parts call out of Chassis Assembly see:	
	72779	H300C & H300D Series
	72724	H400C & H400D Series
	Reference for Tokheim internal use only:	
	422740	Raceway Assembly

1-72751

4
C

FUEL TUBE CLAMP ASSEMBLY

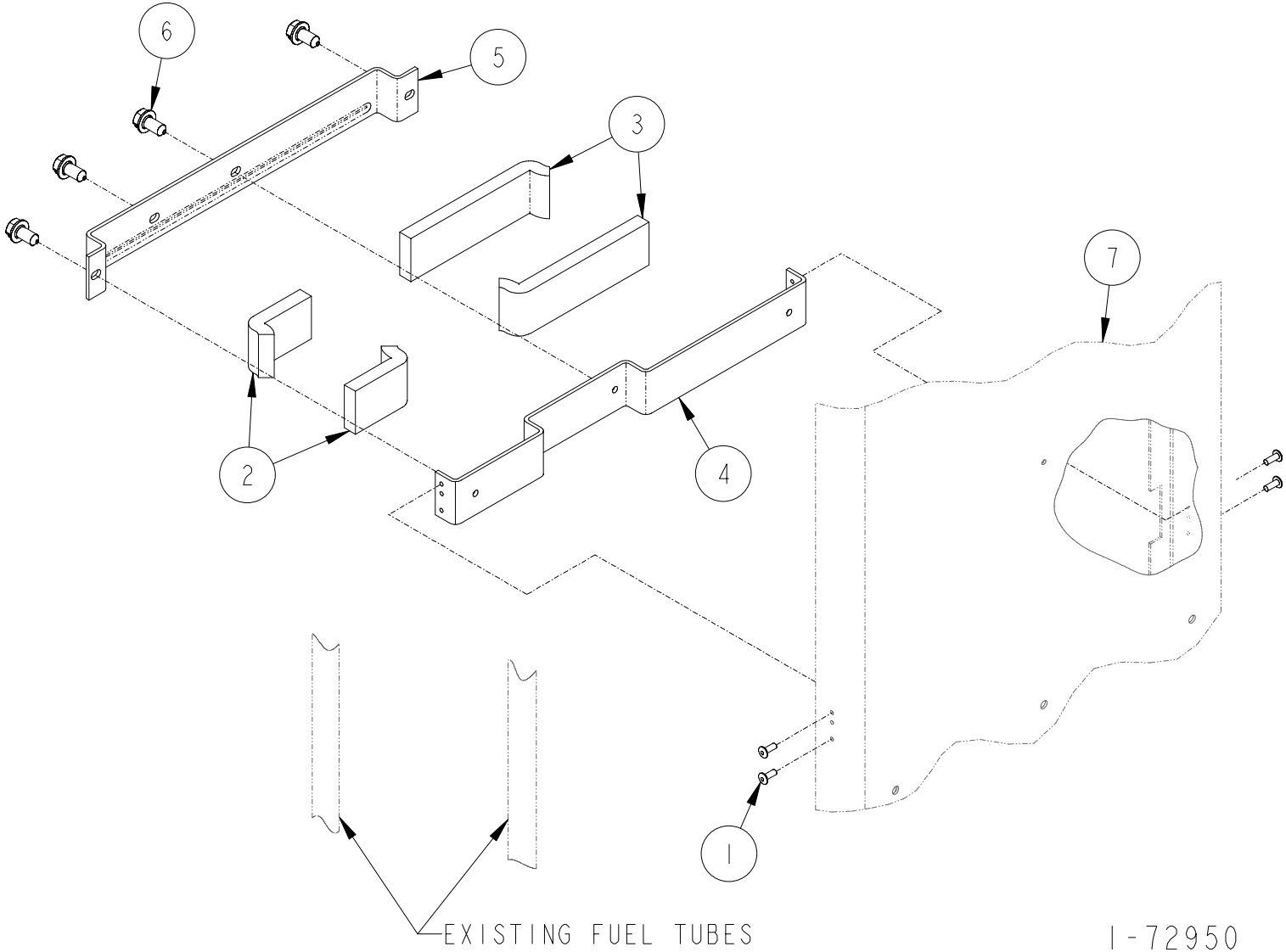

FUEL TUBE CLAMP ASSEMBLY

ITEM NO.	PART NO.	DESCRIPTION
1	2-128281	Rivet
2	15-317638	Cushion
3	49-317638	Cushion
4	1-321415	Tube Bracket
5	1-321416	Tube Holder
6	69-55392	1/4 x 1/2" Long Hex Washer Head Tapping Screw
7	For parts call out of Chassis Assembly see:	
	72779	45"
	72724	30"
	Reference for Tokheim internal use only:	
	321170	45"
	321212	30"

1-72950

SECTION 2

Outer Shell

Page Number

Trim Assembly
- H300C & H300D Series 2-2, 2-3
- H400C & H400D Series 2-4, 2-5

Lower Door Assembly 2-6, 2-7

Nozzle Boot Assembly
- Nozzle Boot Assembly 2-8, 2-9
- Lift Lever Nozzle Boot Assembly 2-10, 2-11

Chassis Assembly
- H300C & H300D Series 2-12, 2-13
- H400C & H400D Series 2-14, 2-15

Head Assembly
- H300C Series 2-16, 2-17
- H300D Series 2-18, 2-19
- H400C Series 2-20, 2-21
- H400D Series 2-22, 2-23

Product ID Panel Assembly
- H300C & H300D Series 2-24, 2-25
- H400C & H400D Series 2-26, 2-27

Valance Assembly 2-28, 2-29
Valance Assembly (Shell/Texaco) Used with SGI Canopy 2-30, 2-31

Advertising Mounting Assembly 2-32, 2-33

TRIM ASSEMBLY

H300C & H300D SERIES

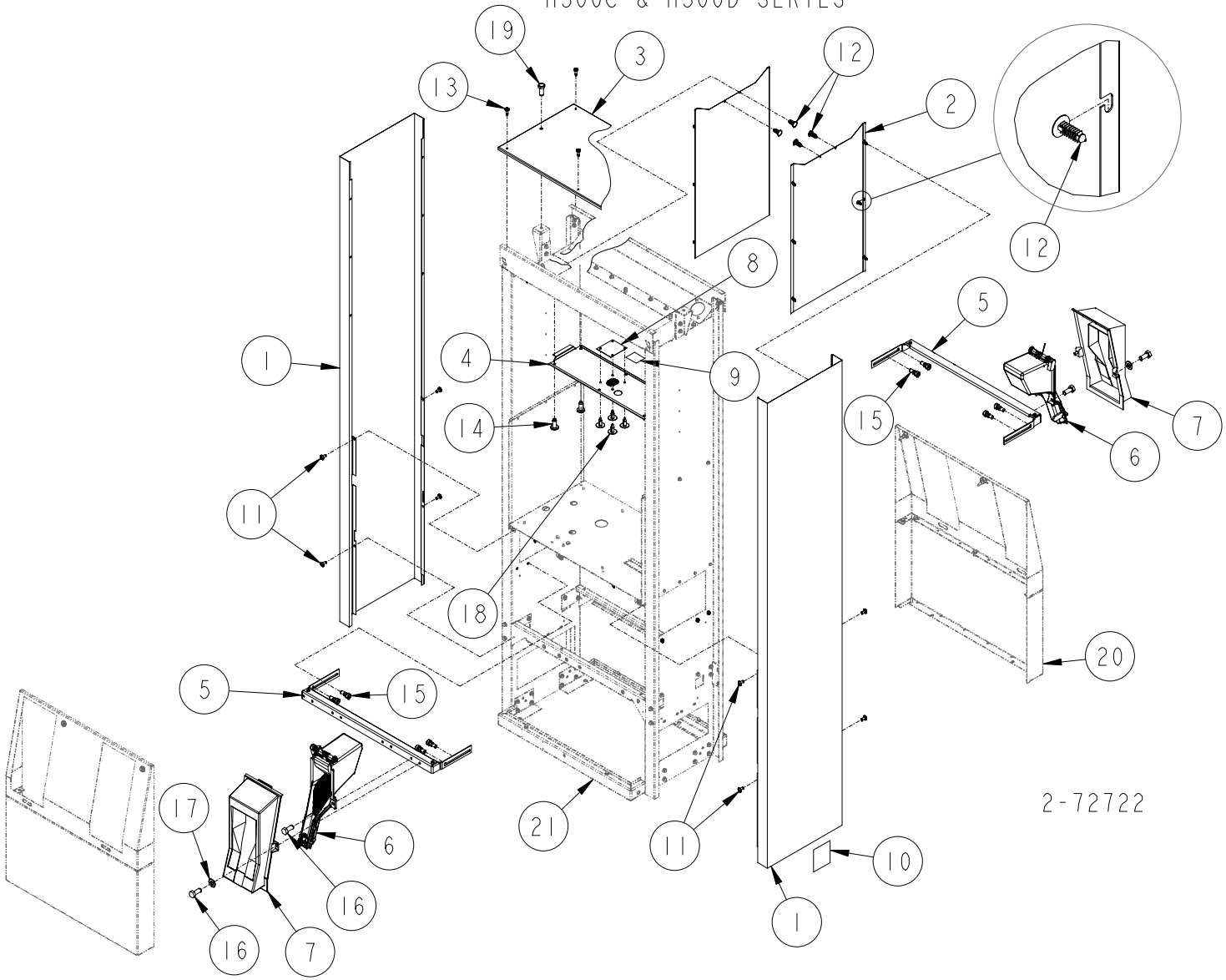

TRIM ASSEMBLY
H300C & H300D SERIES

ITEM NO.	PART NO.	DESCRIPTION
1	Outside Post Cover	
	1-422653	Stainless Steel
	3-422653	Painted
2	Inside Post Cover	
	1-422654	Stainless Steel
	3-422654	Painted
	4-422654	Stainless Steel "Ad Sign"
	1-422990	Stainless Steel (High Volume Satellite only)
	3-422990	Painted (High Volume Satellite only)
	4-422990	Stainless Steel "Ad Sign" (High Volume Satellite only)
3	1-422691	Raceway Cover
4	2-422611	Bottom Access Door
5	321318-1	Boot Support Assembly
6	For parts call out of Boot Assembly see	
	72366	Lift Lever
	72552	Standard
7	Nozzle Boot Shroud	
	1-421067	Black
	7-421067	Gray
8	1-230783	Speaker Baffle
9	1-226268	Decalcomania
10	1-225094	Decal (Unleaded)
11	1-126964	#8-32 x 3/8" Long Truss Head Thread Cutting Screw
12	1-233702	Christmas Tree Clip
13	1-131282	#8-32 x 1/2" Long Seal Screw
14	466-54928	5/16-18 x 3/4" Long Phillips Pan Head Machine Screw
15	1-232838	Shoulder Socket Screw
	37-50361	5/16-18 x 1-1/2" Long Hex Head Cap Screw
16	20-51491	5/16 x 3/4" Long P-K Self Tapping Screw
17	08-50621	5/16" Plain Washer
18	2-132721	Snap Rivet
19	1-230958	5/16-18 x 3/4" Long Hex Head Cap Screw
20	For parts call out of Door Assembly see 72734.	
21	For parts call out of Chassis Assembly see 72779.	

Reference for Tokheim internal use only:
321204 Chassis Assembly
321216 Trim Assembly
321218 Final Assembly
422740 Raceway Assembly

2-72722

TRIM ASSEMBLY

H400C & H400D SERIES

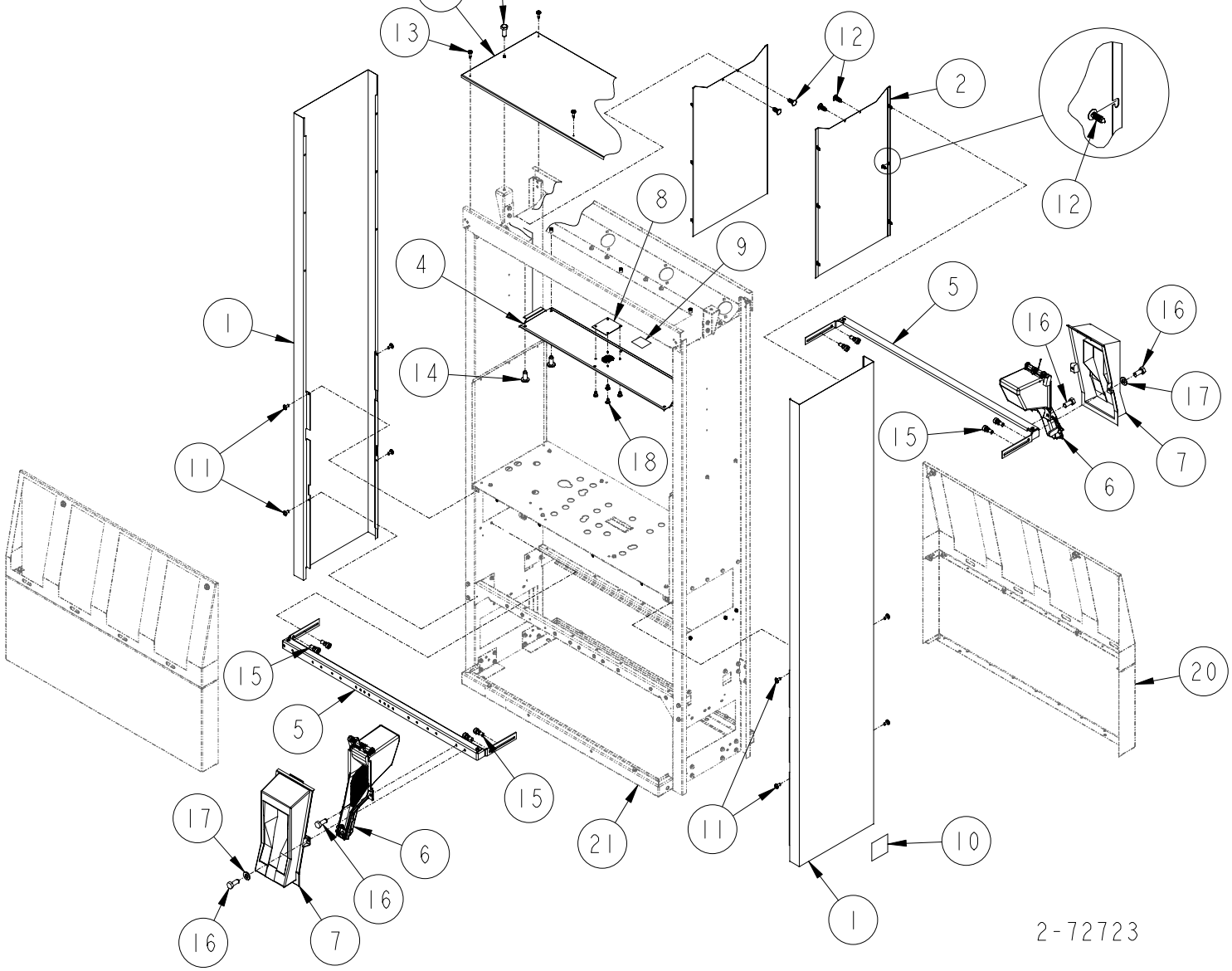

TRIM ASSEMBLY
H400C & H400D SERIES

ITEM NO.	PART NO.	DESCRIPTION
1	Outside Post Cover	
	1-422653	Stainless Steel
	3-422653	Painted
2	Inside Post Cover	
	1-422654	Stainless Steel
	3-422654	Painted
	4-422654	Stainless Steel "Ad Sign"
3	1-422690	Raceway Cover
4	1-422611	Bottom Access Door
5	321318-2	Boot Support Assembly
6	For parts call out of Boot Assembly see	
	72366	Lift Lever
	72552	Standard
7	Nozzle Boot Shroud	
	1-421067	Black
	7-421067	Gray
8	1-230783	Speaker Baffle
9	1-226268	Decalcomania
10	1-225094	Decal (Unleaded)
11	1-126964	#8-32 x 3/8" Long Truss Head Thread Cutting Screw
12	1-233702	Christmas Tree Clip
13	1-131282	#8-32 x 1/2" Long Seal Screw
14	466-54928	5/16-18 x 3/4" Long Phillips Pan Head Machine Screw
15	1-232838	Shoulder Socket Screw
	37-50361	5/16-18 x 1-1/2" Long Hex Head Cap Screw
16	20-51491	5/16 x 3/4" Long P-K Self Tapping Screw
17	08-50621	5/16" Plain Washer
18	2-132721	Snap Rivet
19	1-230958	5/16-18 x 3/4" Long Hex Head Cap Screw
20	For parts call out of Door Assembly see 72734.	
21	For parts call out of Chassis Assembly see 72779.	

Reference for Tokheim internal use only:
321153 Chassis Assembly
321214 Trim Assembly
321217 Final Assembly
422624 Raceway Assembly

2-72723

DOOR ASSEMBLY

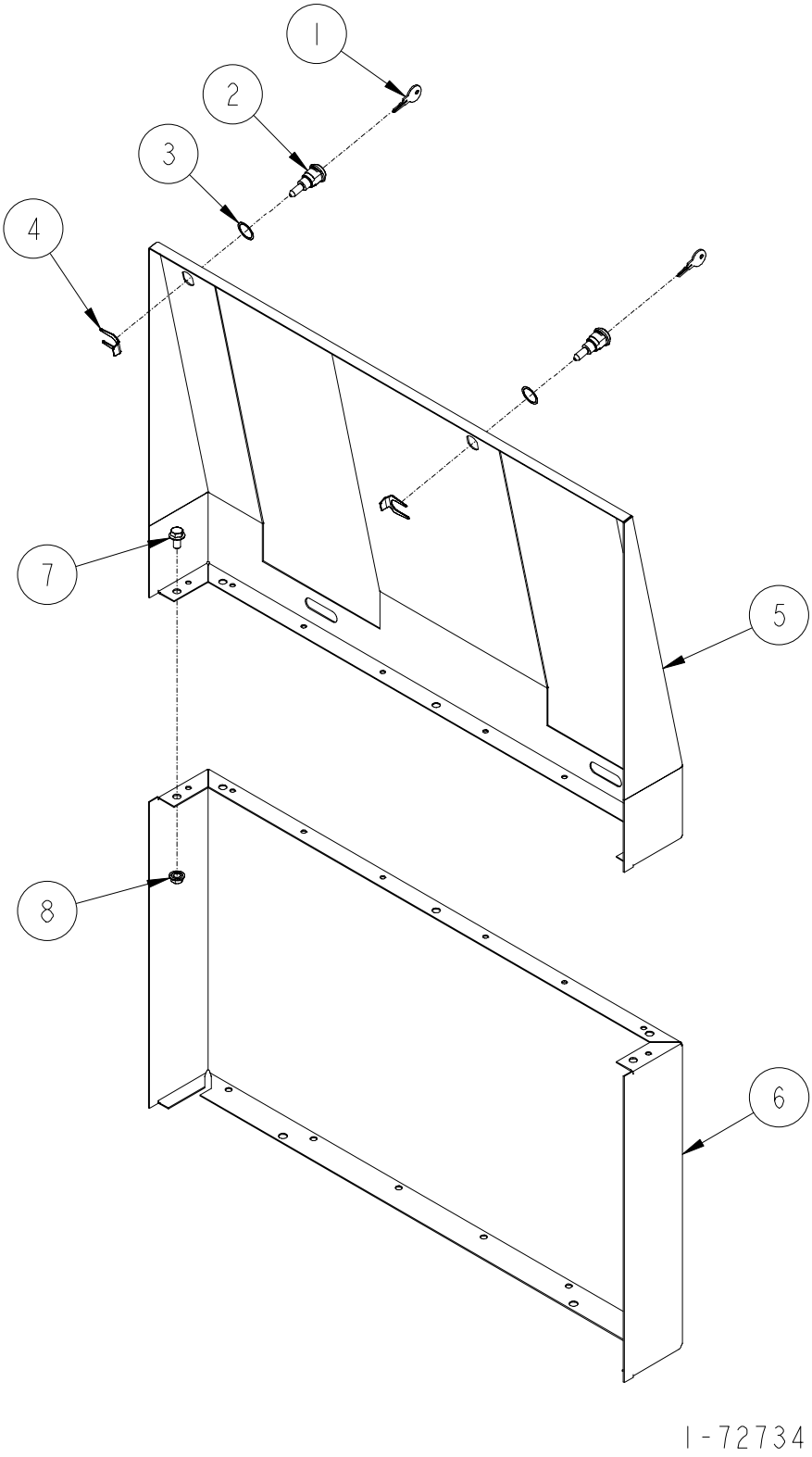

DOOR ASSEMBLY

ITEM NO.	PART NO.	DESCRIPTION
1	1-131381	TPX 83 Key
2	1-232841	Door Lock (Includes items 1 & 4)
3	2-127656	Lock Gasket
4	3-217160	Spring Clip
5	Upper Access Door (Painted)	
	1-422644	H413C Side "A", H426C H413D Side "A", H426D
	3-422644	H411C Side "B", H412C Side "B", H413C Side "B", H414C Side "B", H411D Side "B", H412D Side "B", H413D Side "B", H414D Side "B"
	5-422644	H414C Side "A", H428C Side "B", H414D Side "A", H428D Side "B"
	7-422644	H411C Side "A", H422C H411D Side "A", H422D
	9-422644	H412C Side "A", H412D Side "A", H412C-B3/5 Side "A", H424C, H424D, H424C-B3/5
	13-422644	H422C & H422D (Center Boot Cutout)
	1-422657	H312C Side "A", H324C H312D Side "A", H324D
	3-422657	H311C Side "B", H311D Side "B", H311C-B3/5 Side "B", H312C Side "B", H312D Side "B"
	5-422657	H322C-B3/5 Side "B"
	7-422657	H311C Side "A", H311D Side "A", H311C-B3/5 Side "A", H322C Side "A", H322D Side "A", H322C-B3/5 Side "A"
	Upper Access Door (Stainless Steel)	
	2-422644	H413C Side "A", H426C, H413D Side "A", H426D
	4-422644	H411C Side "B", H412C Side "B", H413C Side "B", H414C Side "B", H411D Side "B", H412D Side "B", H413D Side "B", H414D Side "B"
	6-422644	H414C Side "A", H428C Side "B", H414D Side "A", H428D Side "B"
	8-422644	H411C Side "A", H422C H411D Side "A", H422D
	10-422644	H412C Side "A", H412D Side "A", H412C-B3/5 Side "A", H424C, H424D, H424C-B3/5
	14-422644	H422C & H422D (Center Boot Cutout)
	2-422657	H312C Side "A", H324C, H312D Side "A", H324D
	4-422657	H311C Side "B", H312C Side "B", H311D Side "B", H312D Side "B"
	6-422657	H322C-RB3/5 Side "B"
	8-422657	H311C Side "A", H311D Side "A", H311C-B3/5 Side "A", H322C Side "A", H322D Side "A", H322C-B3/5 Side "A"
6	Lower Access Door	
	1-422659	30" Series (Painted)
	1-422632	45" Series (Painted)
	2-422632	45" Series (Stainless Steel)
7	35-55132	5/16-18 x 5/8" Long M-F Flange Whiz Lock Screw
8	02-54752	5/16-18 M-F Flange Whiz Lock Nut

For Tokheim internal use only:
321217 H400C Final Assembly
321218 H300C Final Assembly
422645 Upper Door Assembly

1-72734

NOZZLE BOOT ASSEMBLY

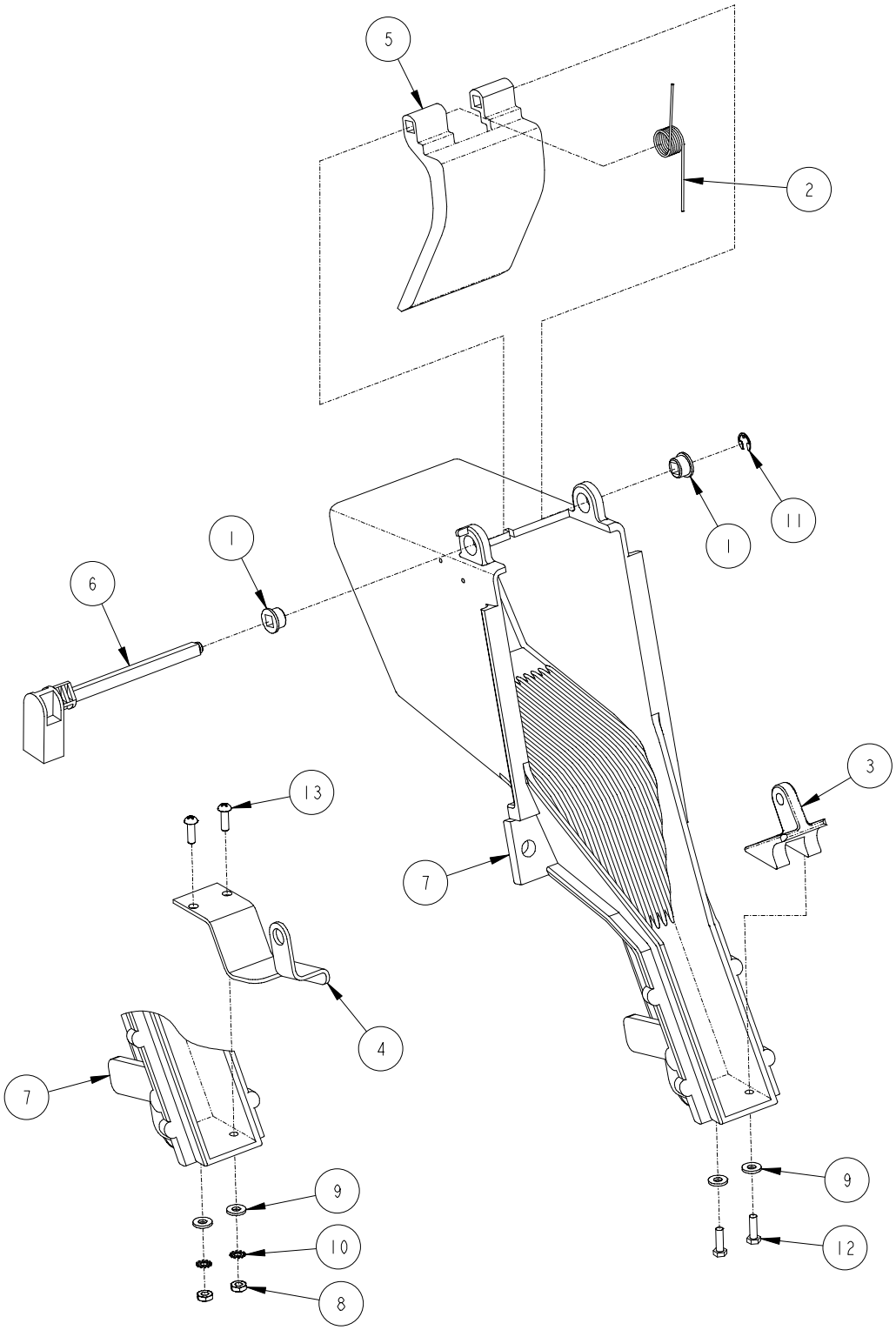

NOZZLE EXTENSION

2-72552

NOZZLE BOOT ASSEMBLY

ITEM NO.	PART NO.	DESCRIPTION
1	1-231835	Nozzle Boot Bearing
2	1-232299	Torsion Spring
3	C-232836	Lock Plate
4	232729-3	Nozzle Boot Service Kit Assembly (Extension) (Includes items 8, 9, 10 & 13)
5	1-320160	Nozzle Boot Flap
6	1-320489	Nozzle Boot Mercury Switch
7	422202-1	Nozzle Boot Assembly
8	05-50211	#10-24 Hex Nut
9	05-50622	#10 Plain Washer
10	05-50761	#10 Shakeproof Lockwasher
11	12-52482	Truarc Retaining Ring
12	10-53532	#10-24 x 5/8" Long P-K Hex Head Self Tapping Screw
13	253-54911	#10-24 x 9/16" Long Pan Head Machine Screw

<u>For complete Nozzle Boot Assembly order:</u>

422202-1	Standard
422202-3	Extension

2-72552

LIFT LEVER NOZZLE BOOT ASSEMBLY

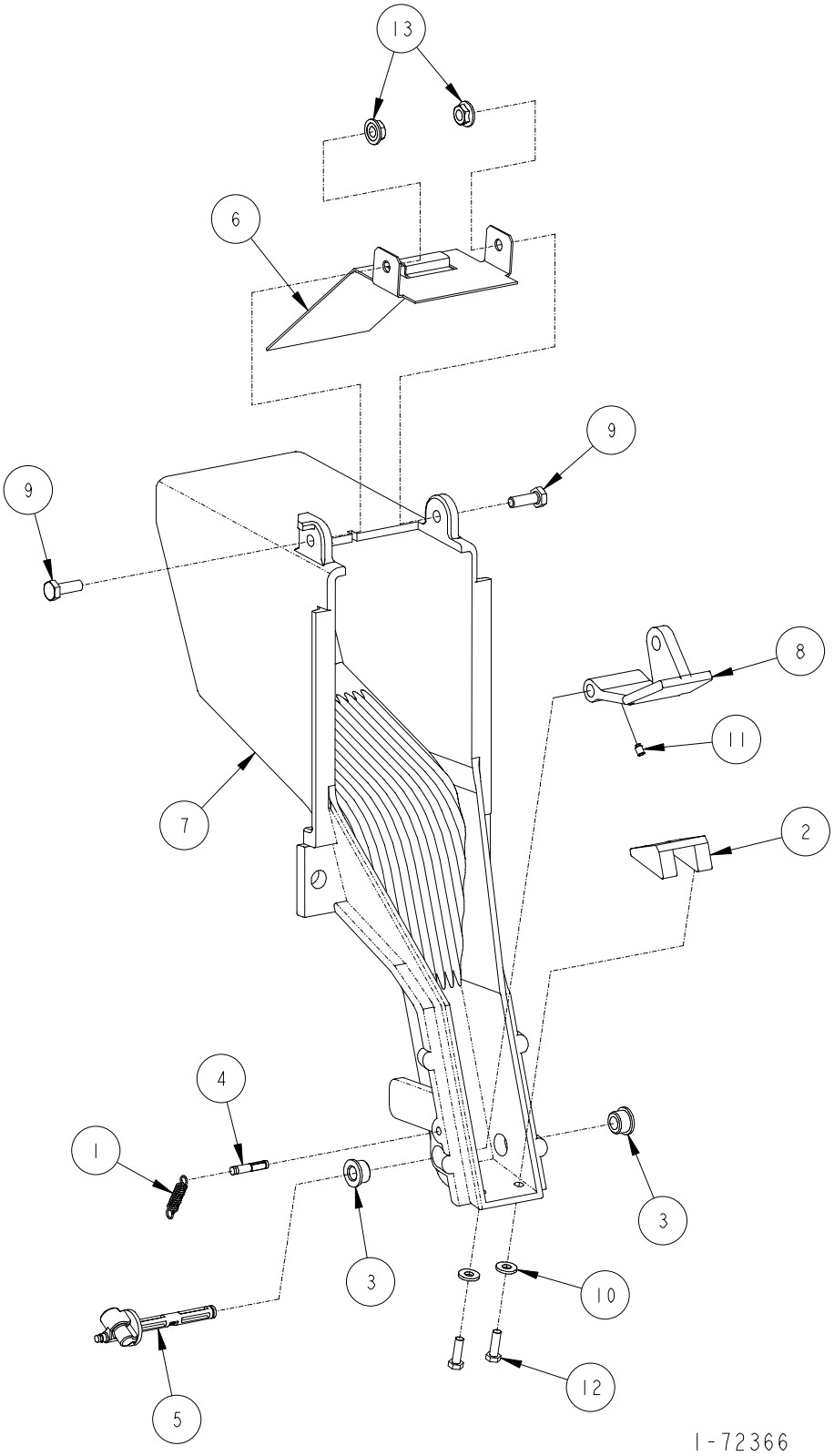

LIFT LEVER NOZZLE BOOT ASSEMBLY

ITEM NO.	PART NO.	DESCRIPTION
1	1-132827	Extension Spring
2	2-231868	Stop Plate
3	1-232773	Nozzle Boot Bearing
4	1-232897	Pin Grooved
5	1-320522	Mercury Switch
6	1-320633	Nozzle Restraint Bracket
7	422202-2	Nozzle Boot Assembly
8	1-422259	Lift Lever
9	03-50361	1/4-20 x 3/4" Long Hex Head Cap Screw
10	05-50622	#10 Plain Washer
11	303-50757	#8-32 x 1/4" Long Set Screw
12	10-53532	#10-24 x 5/8" Long P-K Hex Head Self Tapping Screw
13	01-54752	1/4-20 M-F Flange Whiz Lock Nut

For complete Nozzle Boot Assembly order: 422202-2
Lift to Start Kit order 233081-1

1-72366

CHASSIS ASSEMBLY

H300C & H300D SERIES

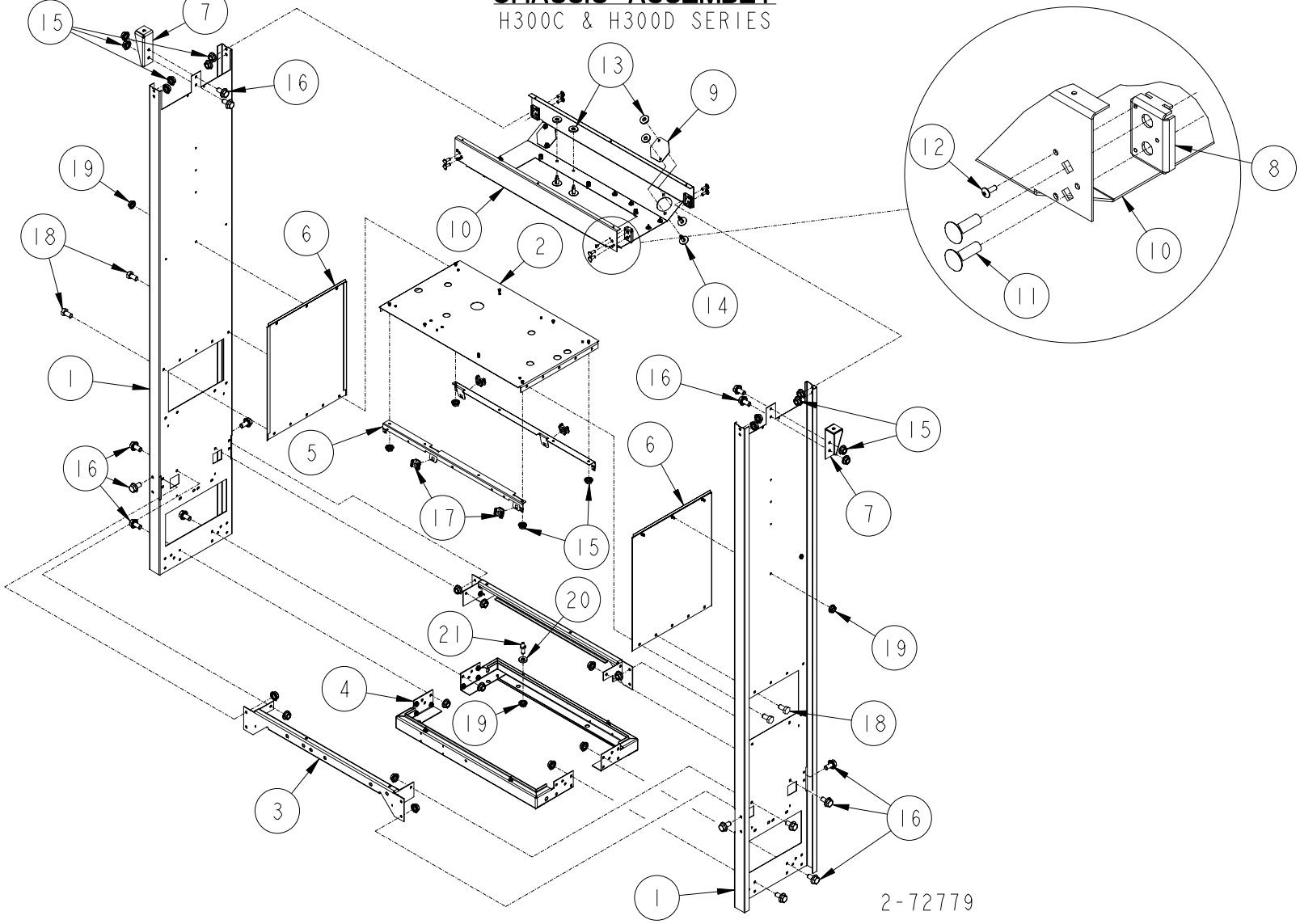

CHASSIS ASSEMBLY

H300C & H300D SERIES

ITEM NO.	PART NO.	DESCRIPTION
1	233726-1	Column Assembly
2	Barrier Plate Assembly	
	422684-1	H312C, H324C, H312D, H324D
	422684-2	H311C, H322C, H311D, H322D
	422684-3	H322C-B3/5
	422972-1	H311C-RHVM, H322C-RHVMS, H322C-RHVMM & H324C-RHVMS
	423359-1	H311C-RHVS & H312C-RHVSS
3	422606-3	Meter Mounting Rail Assembly
4	321239-2	Base Assembly
5	1-422674	Door Lock Bracket
6	422753-1	Vapor Panel Assembly
7	321081-1	Lift Bracket Weld Assembly
8	1-321101	Raceway Spacer
9	1-232320	Cover Plate
10	321240-2	Raceway Assembly
11		Carriage Bolt
12	2-230689	#6 x 3/8" Long Phillips Head Self Tapping Screw
13	1-114438	Washer
14	1-232311	Tuflok Screw
15	02-54752	5/16-18 x 5/8" Long M-F Flange Whiz Lock Screw
16	35-55132	5/16-18 x 5/8" Long M-F Flange Whiz Lock Washer Screw
17	1-232914	Nut Retainer
18	20-51491	5/16 x 3/4" Long Self Tapping Screw
19	01-54752	1/4-20 M-F Flange Whiz Lock Nut
20	1-132982	Door Washer
21	1-132981	Door Pin

Reference for Tokheim internal use only:

321097	Frame Assembly
321204	Chassis Assembly
422740	Raceway Assembly

2-72779

CHASSIS ASSEMBLY

H400C & H400D SERIES

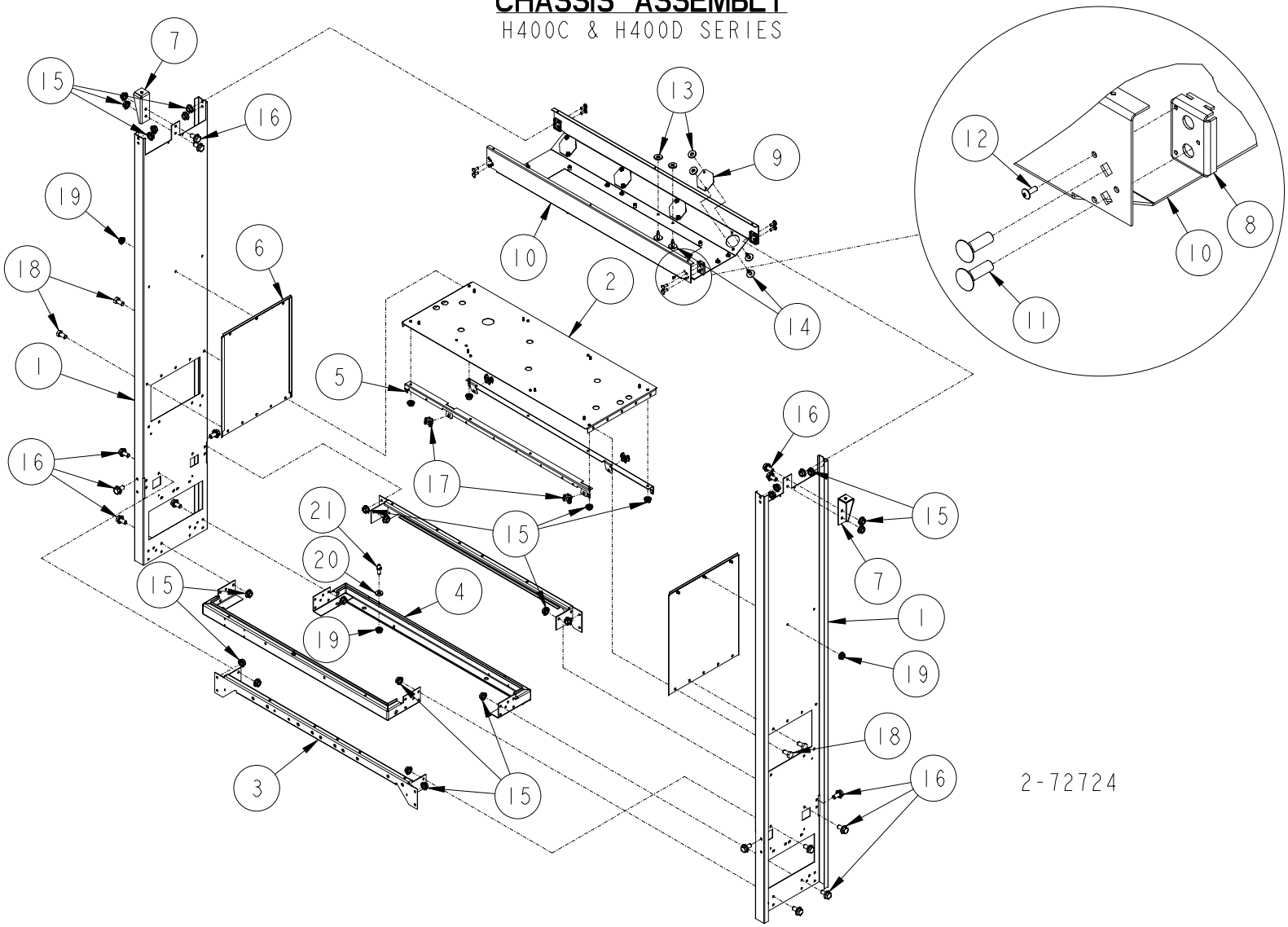

CHASSIS ASSEMBLY

H400C & H400D SERIES

ITEM NO.	PART NO.	DESCRIPTION
1	233726-1	Column Assembly
2	Barrier Plate Assembly	
	422647-1	H413C, H422C, H426C, H413D, H422D, H426D
	422647-2	H412C, H414C, H424C, H428C, H412D, H414D, H424D, H428D
	422647-3	H422C-B3/5
	422647-4	H424C-B3/4
	422647-5	H413C-EB & H426C-EB
	422647-6	H428C-EB
3	Meter Mounting Rail Assembly	
	422606-1	All models except listed below
	422606-2	H414C, H414D, H428C, H428D
4	321239-1	Base Assembly
5	1-422673	Door Lock Bracket
6	422753-1	Vapor Panel Assembly
7	321081-1	Lift Bracket Weld Assembly
8	1-321101	Raceway Spacer
9	1-232320	Cover Plate
10	321240-1	Raceway Assembly
11		Carriage Bolt
12	2-230689	#6 x 3/8" Long Phillips Head Self Tapping Screw
13	1-114438	Washer
14	1-232311	Tuflok Screw
15	02-54752	5/16-18 x 5/8" Long M-F Flange Whiz Lock Screw
16	35-55132	5/16-18 x 5/8" Long M-F Flange Whiz Lock Washer Screw
17	1-232914	Nut Retainer
18	20-51491	5/16 x 3/4" Long Self Tapping Screw
19	01-54752	1/4-20 M-F Flange Whiz Lock Nut
20	1-132982	Door Washer
21	1-132981	Door Pin
	Reference for Tokheim internal use only:	
	321093	Frame Assembly
	321153	Chassis Assembly
	422624	Raceway Assembly

2-72724

HEAD ASSEMBLY
(H300C SERIES)

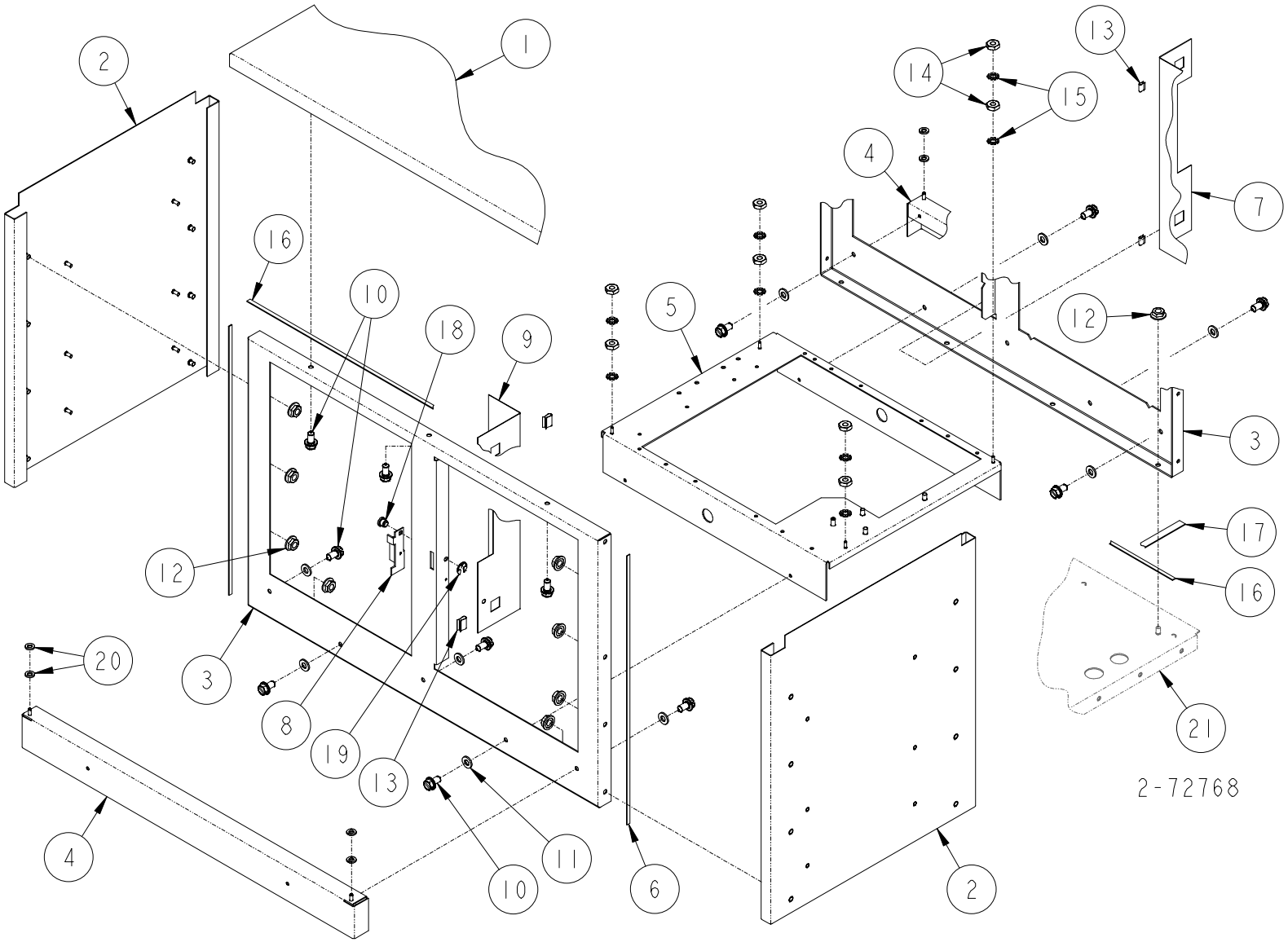

HEAD ASSEMBLY
(H300C SERIES)

ITEM NO.	PART NO.	DESCRIPTION
1	2-422629	Top Enclosure
2	Enclosure Side Assembly	
	422626-2	Serial Number & Below
	423032-2	Serial Number & Above
3	Enclosure Dial Support	
	1-422638	Serial Number & Below
	1-423033	Serial Number & Above
4	Dial Hinge Supportl Assembly	
	422631-2	Serial Number & Below
	423042-2	Serial Number & Above
5	422640-1	UDC-DPT Support Assembly
6	22-231860	Cushion
7	1-422710	AC Power Shield
8	1-233665	Money/Volume Door Lock
9	1-321130	AC Power Shield
10	69-55392	1/4-20 x 1/2" Long Hex Washer Head Tapping Screw
11	1-132708	Washer
12	M-F Flange Whiz Lock Nut	
	01-54752	1/4-20 (Serial Number & Below)
	03-54752	#10-24 (Serial Number & Above)
13	1-132845	"U" Clip
14	03-50211	#6 Hex Machine Nut
15	03-50762	#6 Shakeproof Lockwasher
16	23-231860	Cushion (.25 x 29.8)
17	24-231860	Cushion (.5 x 15)
18	2-130330	Pivot Pin
19	06-52482	Truarc Retaining Ring
20	2-131445	Nylon Washer
21	For parts call out of Chassis Assembly see 72724.	

Reference for Tokheim internal use only:

321096	Head Assembly
321204	Chassis Assembly

2-72768

HEAD ASSEMBLY
(H300D SERIES)

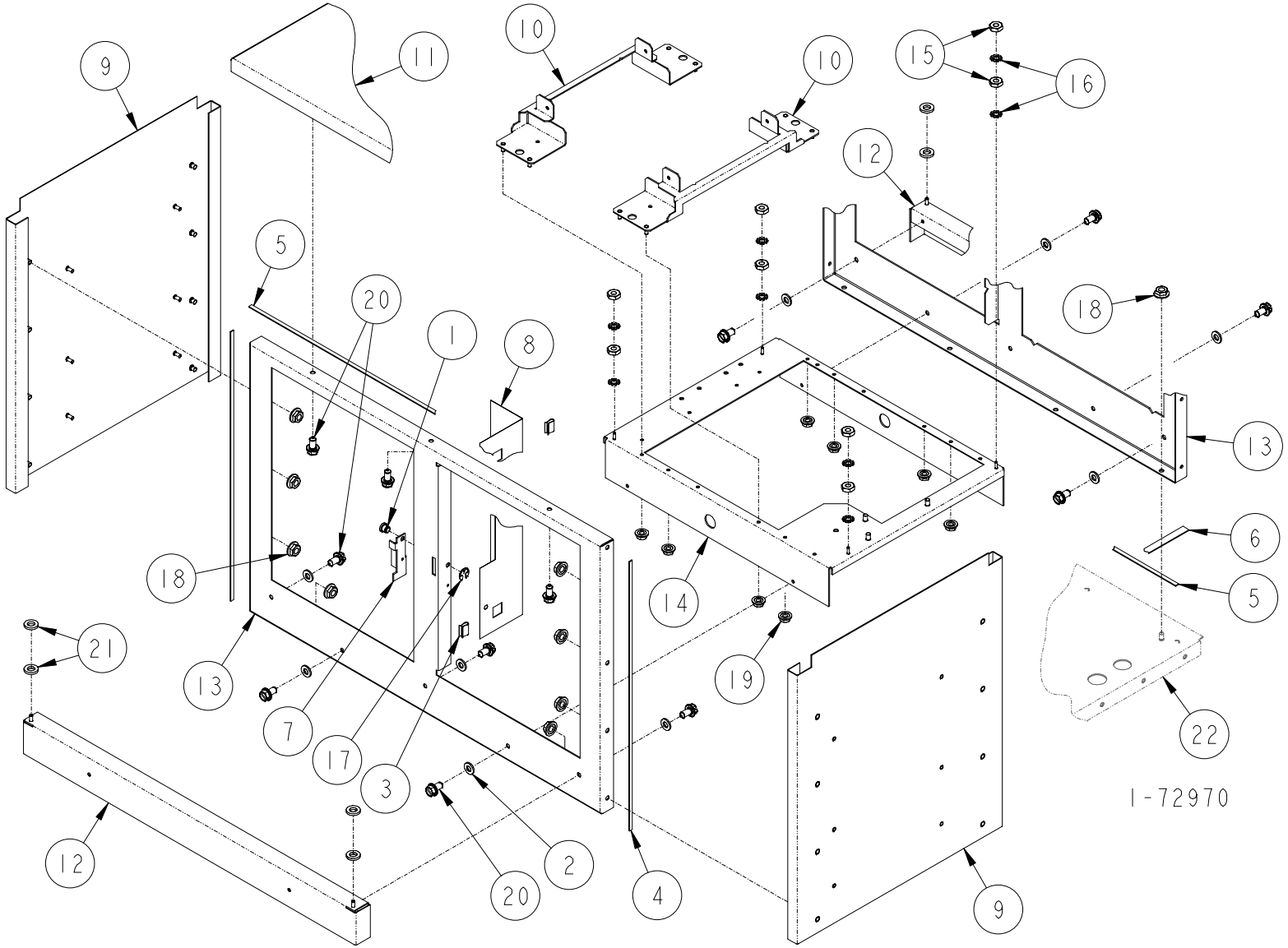

HEAD ASSEMBLY
(H300D SERIES)

ITEM NO.	PART NO.	DESCRIPTION
1	2-130330	Pivot Pin
2	1-132708	Washer
3	1-132845	"U" Clip
4	22-231860	Cushion
5	23-231860	Cushion (.25 x 29.8)
6	24-231860	Cushion (.5 x 15)
7	1-233665	Money/Volume Door Lock
8	1-321130	AC Power Shield
9	423032-2	Enclosure Side Assembly
10	321472-1	Mounting Bracket Assembly
11	2-422629	Top Enclosure
12	423042-2	Dial Hinge Supportl Assembly
13	1-423033	Enclosure Dial Support
14	422640-1	UDC-DPT Support Assembly
15	03-50211	#6 Hex Machine Nut
16	03-50762	#6 Shakeproof Lockwasher
17	06-52482	Truarc Retaining Ring
18	01-54752	1/4-20 M-F Flange Whiz Lock Nut
19	03-54752	5/16-18 M-F Flange Whiz Lock Nut
20	69-55392	1/4-20 x 1/2" Long Hex Washer Head Tapping Screw
21	2-131445	Nylon Washer

ITEM NO.	PART NO.	DESCRIPTION
22	For parts call out of Chassis Assembly see 72724.	

Reference for Tokheim internal use only:

321306 H300D Head Assembly

1-72970

HEAD ASSEMBLY
(H400C SERIES)

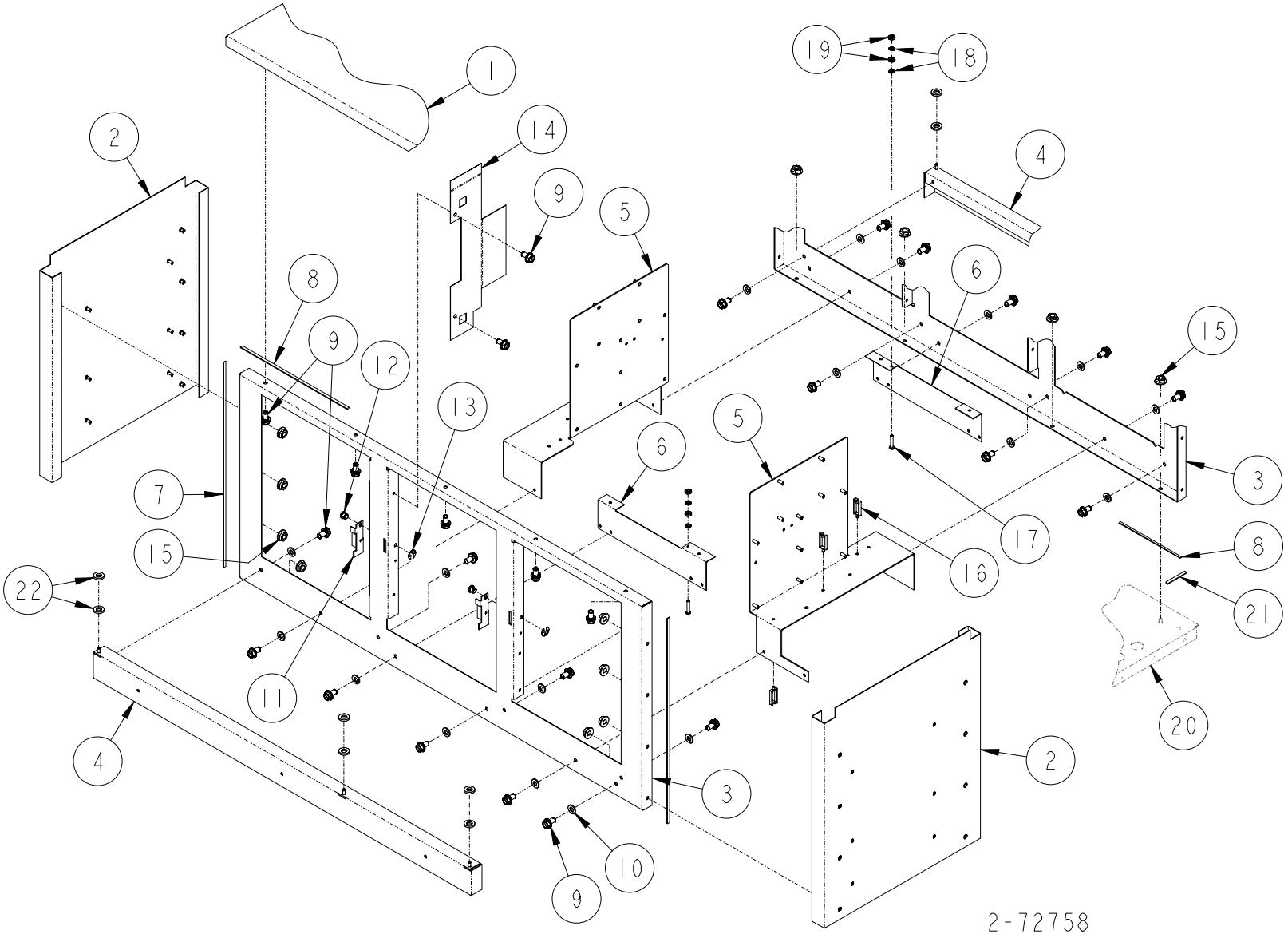

HEAD ASSEMBLY
(H400C SERIES)

ITEM NO.	PART NO.	DESCRIPTION
1	1-422629	Top Enclosure
2	Enclosure Side Assembly	
	422626-1	Serial Number & Below
	423032-1	Serial Number & Above
3	Enclosure Dial Support	
	1-422669	Serial Number & Below
	1-423034	Serial Number & Above
4	Dial Hinge Supportl Assembly	
	422631-1	Serial Number & Below
	423042-1	Serial Number & Above
5	321078-1	DPT/Enclosure Support Assembly
6	1-321116	UDC Support
7	22-231860	Cushion
8	21-231860	Cushion
9	69-55392	1/4-20 x 1/2" Long Hex Washer Head Tapping Screw
10	1-132708	Washer
11	1-233665	Money/Volume Door Lock
12	2-130330	Pivot Pin
13	06-52482	Truarc Retaining Ring
14	1-321130	AC Power Shield
15	M-F Flange Whiz Lock Nut	
	01-54752	1/4-20 (Serial Number & Below)
	03-54752	#10-24 (Serial Number & Above)
16	1-132718	Cable Retainer
17	100-50021	#6-32 x 3/4" Long Phillips Round Head Machine Screw
18	03-50762	#6 Shakeproof Lockwasher
19	03-50211	#6 Hex Machine Nut
20	For parts call out of Chassis Assembly see 72724.	
21	24-231860	Cushion (.5 x 15)
22	2-131445	Nylon Washer
	Reference for Tokheim internal use only:	
	321084	H400C Head Assembly

2-72758

HEAD ASSEMBLY
(H400D SERIES)

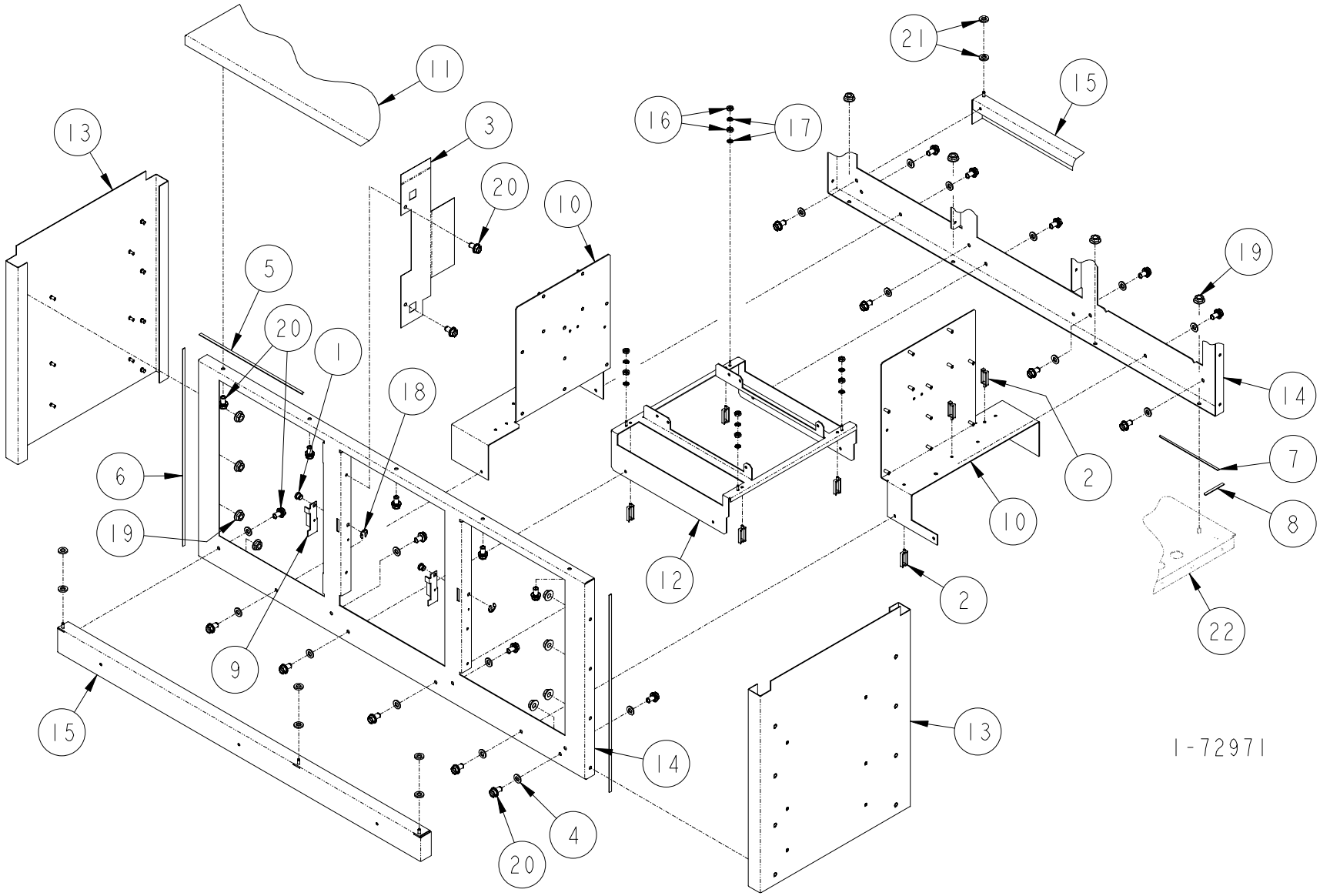

HEAD ASSEMBLY
(H400D SERIES)

ITEM NO.	PART NO.	DESCRIPTION
1	2-130330	Pivot Pin
2	1-132718	Cable Retainer
3	1-321130	AC Power Shield
4	1-132708	Washer
5	21-231860	Cushion (.25 x 44.8)
6	22-231860	Cushion
7	23-231860	Cushion (.25 x 29.8)
8	24-231860	Cushion (.5 x 15)
9	1-233665	Money/Volume Door Lock
10	321078-1	DPT/Enclosure Support Assembly
11	1-422629	Top Enclosure
12	422640-1	UDC-DPT Support Assembly
13	423032-1	Enclosure Side Assembly
14	1-423034	Enclosure Dial Support
15	423042-1	Dial Hinge Support Assembly
16	03-50211	#6 Hex Machine Nut
17	03-50762	#6 Shakeproof Lockwasher
18	06-52482	Truarc Retaining Ring
19	01-54752	1/4-20 M-F Flange Whiz Lock Nut
20	69-55392	1/4-20 x 1/2" Long Hex Washer Head Tapping Screw
21	2-131445	Nylon Washer

ITEM NO.	PART NO.	DESCRIPTION
22	For parts call out of Chassis Assembly see 72724.	

Reference for Tokheim internal use only:

321305 H400D Head Assembly

1-72971

H300C & H300D PRODUCT I.D. PANEL ASSEMBLY

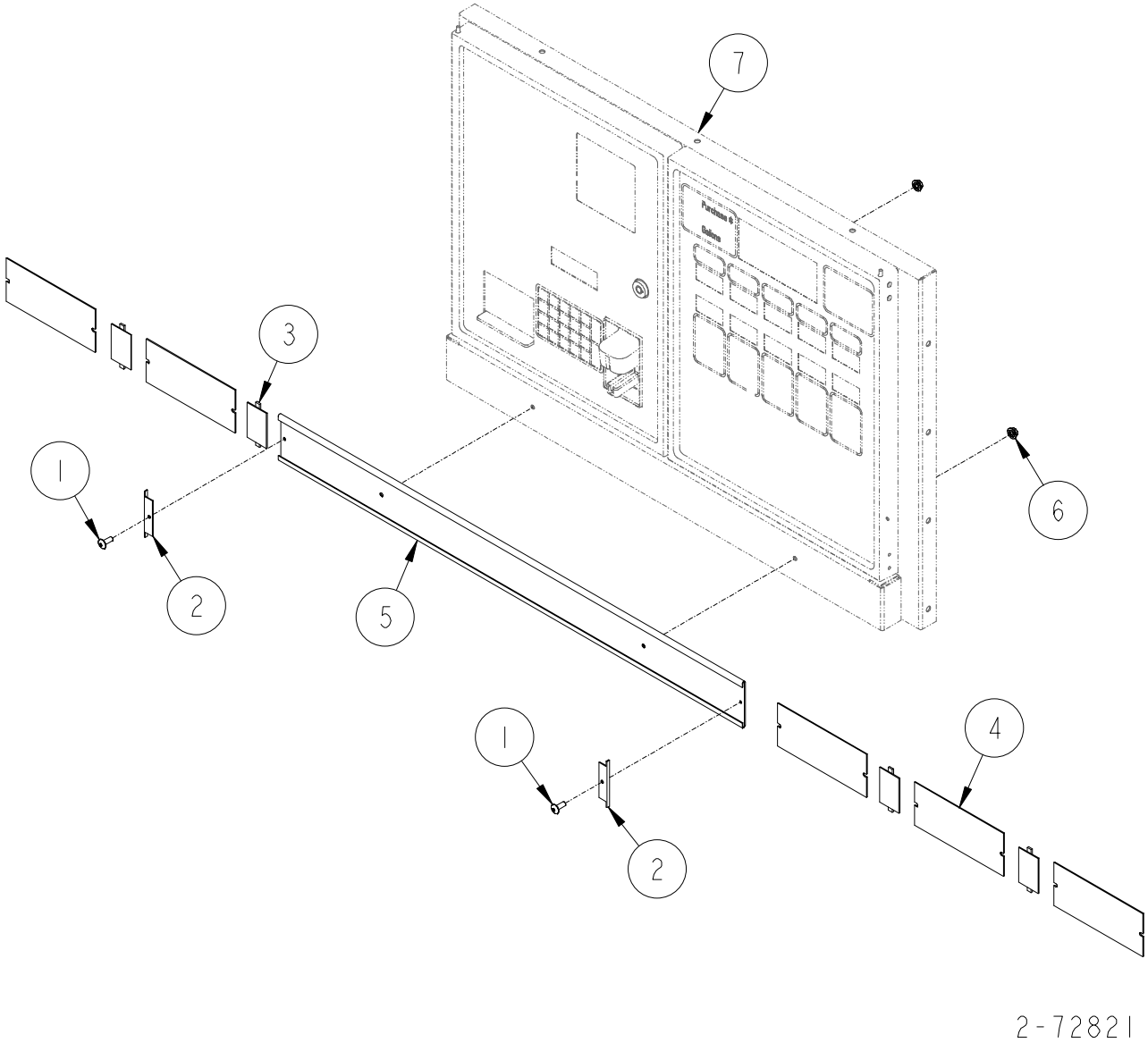

H300C & H300D PRODUCT I.D. PANEL ASSEMBLY

ITEM NO.	PART NO.	DESCRIPTION
1	2-230689	#6 x 3/8" Long Phillips Head Self Tapping Screw
2	End Cap	
	1-233741	Black
	2-233741	Gray
3	1-233688	Product I.D. Spacer
4	Product I.D. Panel	
	2-422876	1 Piece
	3-422876	2 Product (Multi Piece)
	5-422876	3 Product (Multi Piece)
	6-422876	5 Product (Multi Piece)
5	422628-2	Product I.D. Channel Assembly
6	03-54752	#10-24 M-F Flange Whiz Lock Screw
7	For parts call out of Head Assembly see 72768.	

For Product I.D. End Cap Service Kit order: 233750-1

Reference for Tokheim internal use only:

321096	H300C Head Assembly
321306	H300D Head Assembly

2-72821

H400C & H400D PRODUCT I.D. PANEL ASSEMBLY

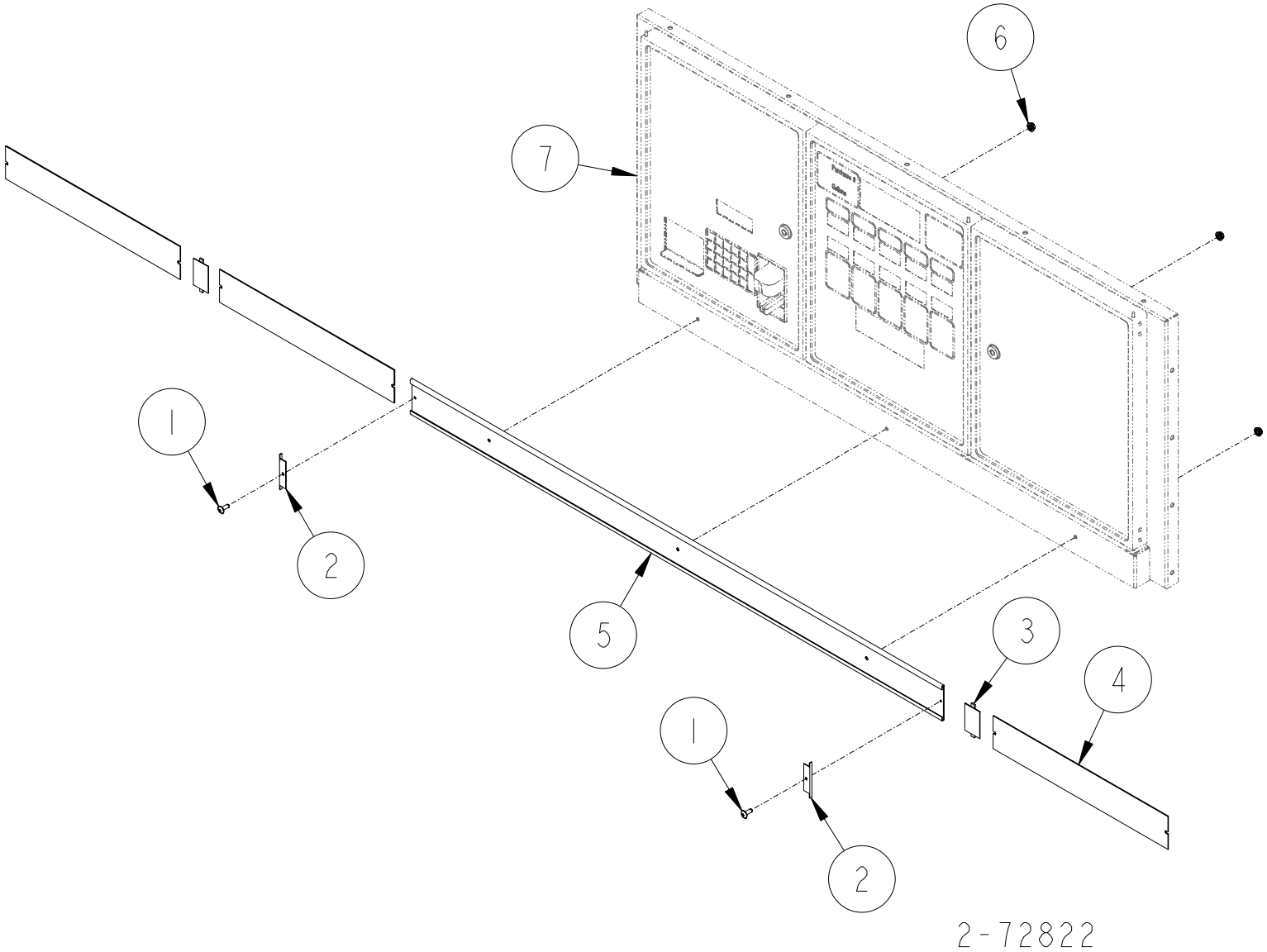

H400C & H400D PRODUCT I.D. PANEL ASSEMBLY

ITEM NO.	PART NO.	DESCRIPTION
1	2-230689	#6 x 3/8" Long Phillips Head Self Tapping Screw
2	End Cap	
	1-233741	Black
	2-233741	Gray
3	1-233688	Product I.D. Spacer
4	Product I.D. Panel	
	1-422876	1 Piece
	3-422876	3 Product 3 Hoses (Multi Piece)
	4-422876	4 Product (Multi Piece)
	5-422876	3 Product 1 Hose (Multi Piece) used with (1 each) 3-422876
	7-422876	5 Product (Multi Piece)
5	422628-1	Product I.D. Channel Assembly
6	03-54752	#10-24 M-F Flange Whiz Lock Screw
7	For parts call out of Head Assembly see 72758.	

For Product I.D. End Cap Service Kit order: 233750-1

Reference for Tokheim internal use only:

321084	H400C Head Assembly
321305	H400D Head Assembly

VALANCE ASSEMBLY

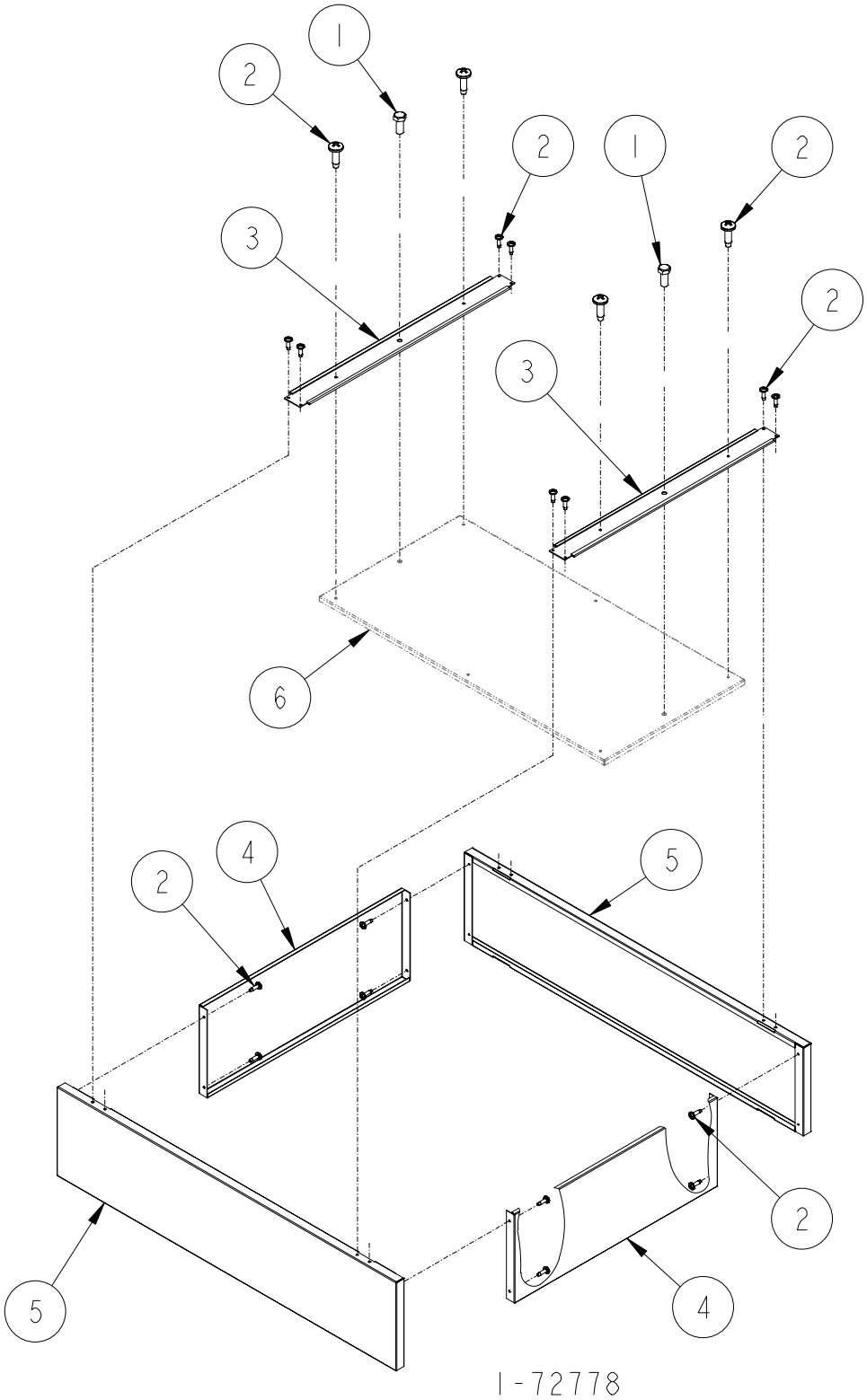

VALANCE ASSEMBLY

ITEM NO.	PART NO.	DESCRIPTION
1	1-230958	#8-32 x 1/2" Long Seal Screw
2	1-131282	#8-32 x 1/2" Long Pan Head Threaded Cutting Screw
3	1-422728	Valance Mounting
4	<u>End Panel</u>	
	1-422725	Painted
	2-422725	Stainless Steel
5	<u>Side Panel</u>	
	1-422726	Painted (H400C & H400D Series)
	2-422726	Stainless Steel (H400C & H400D Series)
	1-422727	Painted (H300C & H300D Series)
	2-422727	Stainless Steel (H300C & H300D Series)
6	<u>For parts call out of Trim Assembly see:</u>	
	72722	H300C & H300D Series
	72723	H400C & H400D Series
	<u>For complete Valance Assembly order:</u>	
	321131-1	Painted (H400C & H400D Series)
	321131-2	Stainless Steel (H400C & H400D Series)
	321131-3	Painted (H300C & H300D Series)
	321131-4	Stainless Steel (H300C & H300D Series)
	<u>Reference for Tokheim internal use only:</u>	
	321217	Final Assembly (H400C & H400D Series)
	321218	Final Assembly (H300C & H300D Series)

1-72778

VALANCE ASSEMBLY
(SHELL/TEXACO)
USED WITH SGI CANOPY

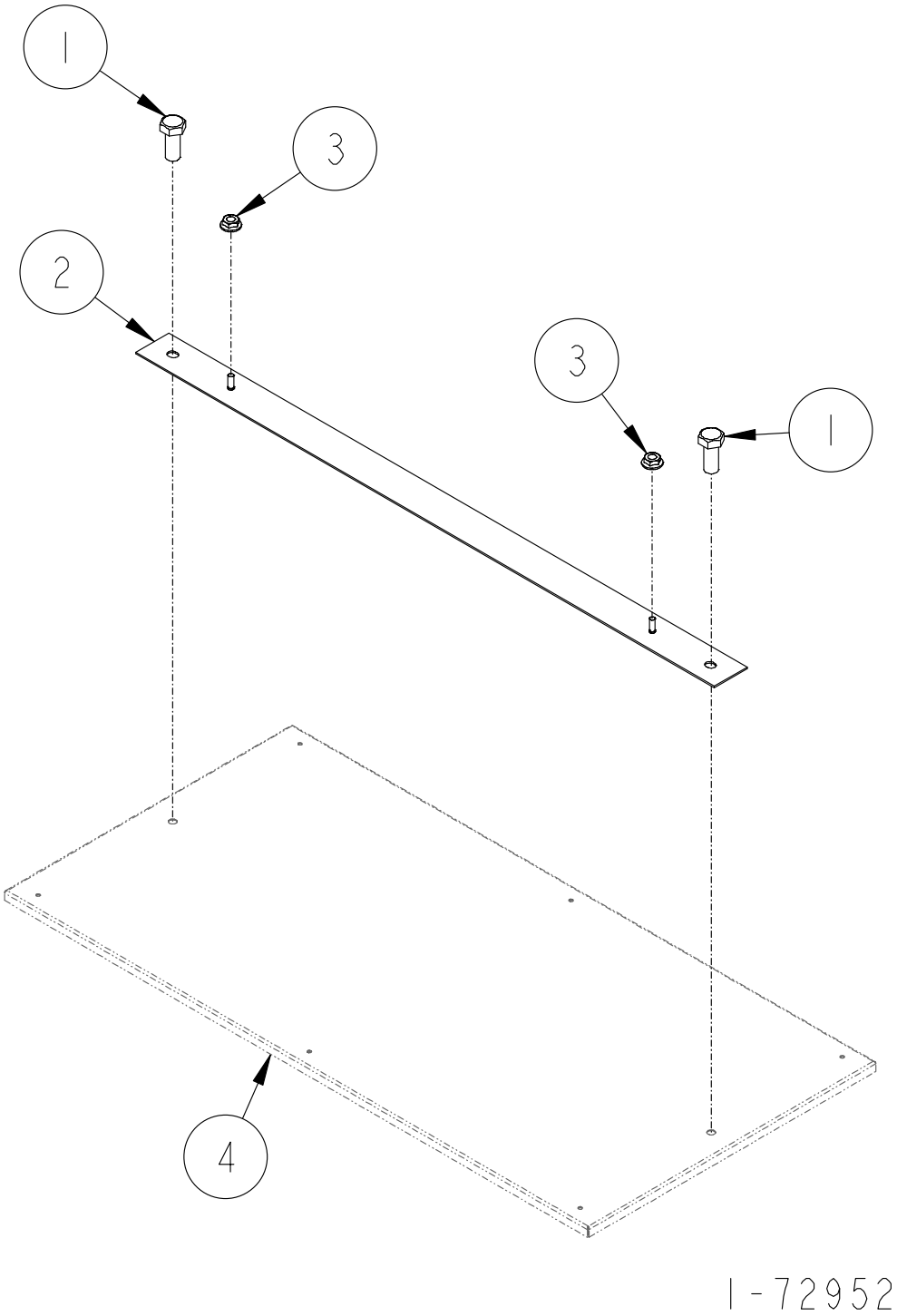

VALANCE ASSEMBLY
(SHELL/TEXACO)
USING SGI CANOPY

ITEM NO.	PART NO.	DESCRIPTION
1	1-131282	#8-32 x 1/2" Long Pan Head Threaded Cutting Screw
2	Canopy Bracket Assembly	
	321450-1	H400C Series & H400D Series
	321450-2	H300C Series & H300D Series
3	01-54752	1/4-20 M-F Flange Whiz Lock Nut
4	For parts call out of Trim Assembly see:	
	72722	H300C Series & H300D Series
	72723	H400C Series & H400D Series
	For complete Valance Assembly order:	
	321131-5	Painted (Shell/Texaco)
	321131-6	Painted (Shell/Texaco)

1-72952

ADVERTISING MOUNTING ASSEMBLY

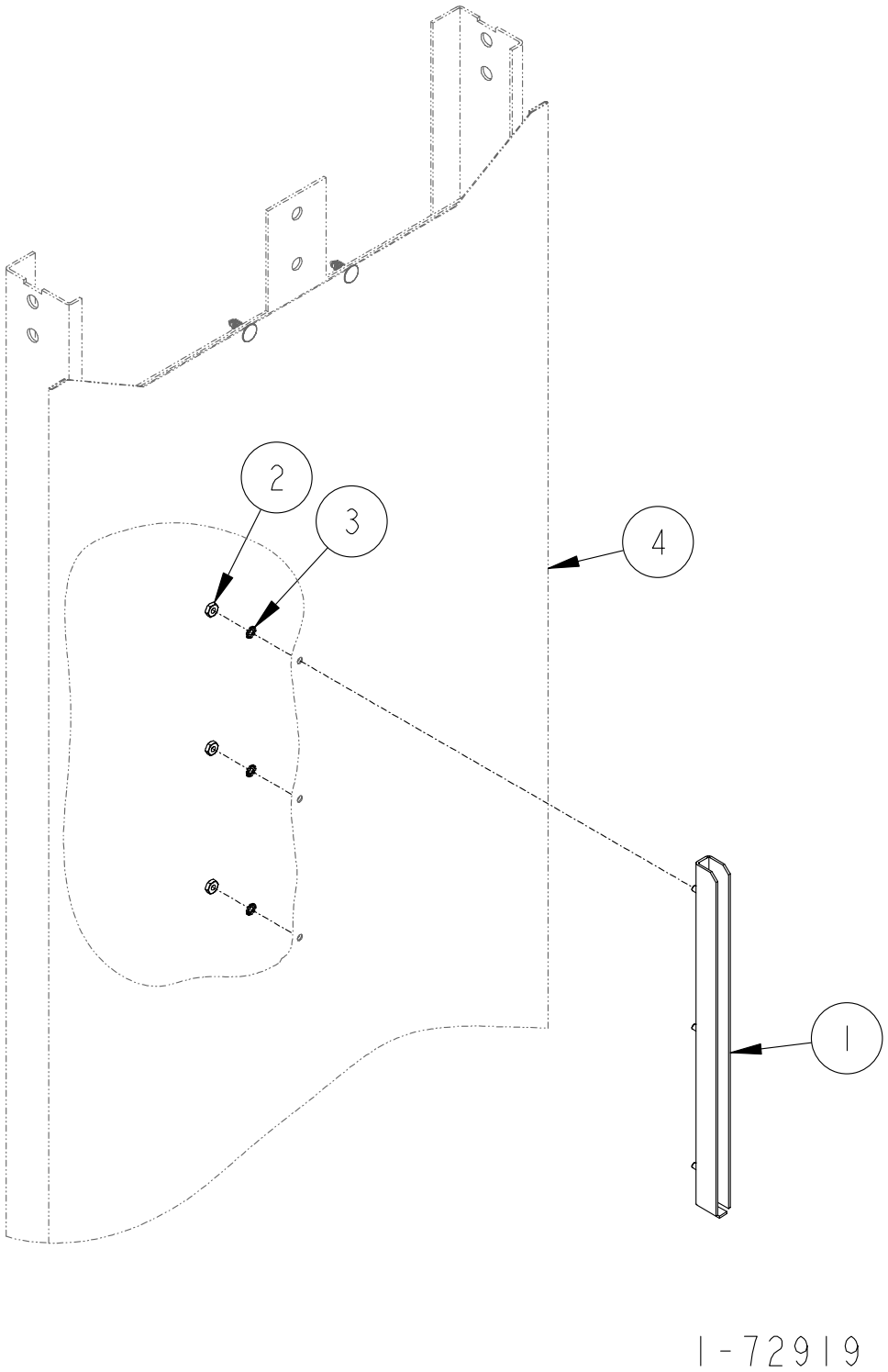

ADVERTISING MOUNTING ASSEMBLY

ITEM NO.	PART NO.	DESCRIPTION
1	321029-1	Mounting Bracket Assembly
2	03-50211	#6-32 Hex Machine Nut
3	#6 Shakeproof Lockwasher	
4	For parts call out of Trim Assembly see:	
	72722	H300C & H300D Series
	72723	H400C & H400D Series
	Reference for Tokheim internal use only:	
	321214	Trim Assembly (H400C & H400D Series)
	321216	Trim Assembly (H300C & H400D Series)
	321435	Chassis Assembly (H300C-RHV Series)

1-72919

SECTION 8A

Remote Control Systems With 898 Meters

Page Number

Remote Control System
H311C, H312C, H411C, H412C, H413C, H414C,
H311D, H312D, H411D, H412D, H413D & H414D 8A-2, 8A-3
H322C, H324C, H422C, H424C, H426C, H428C,
H322D, H324D, H422D, H424D, H426D & H428D 8A-4, 8A-5

REMOTE CONTROL SYSTEM

(H311C, H312C, H411C, H412C, H413C & H414C)
(H311D, H312D, H411D, H412D, H413D & H414D)

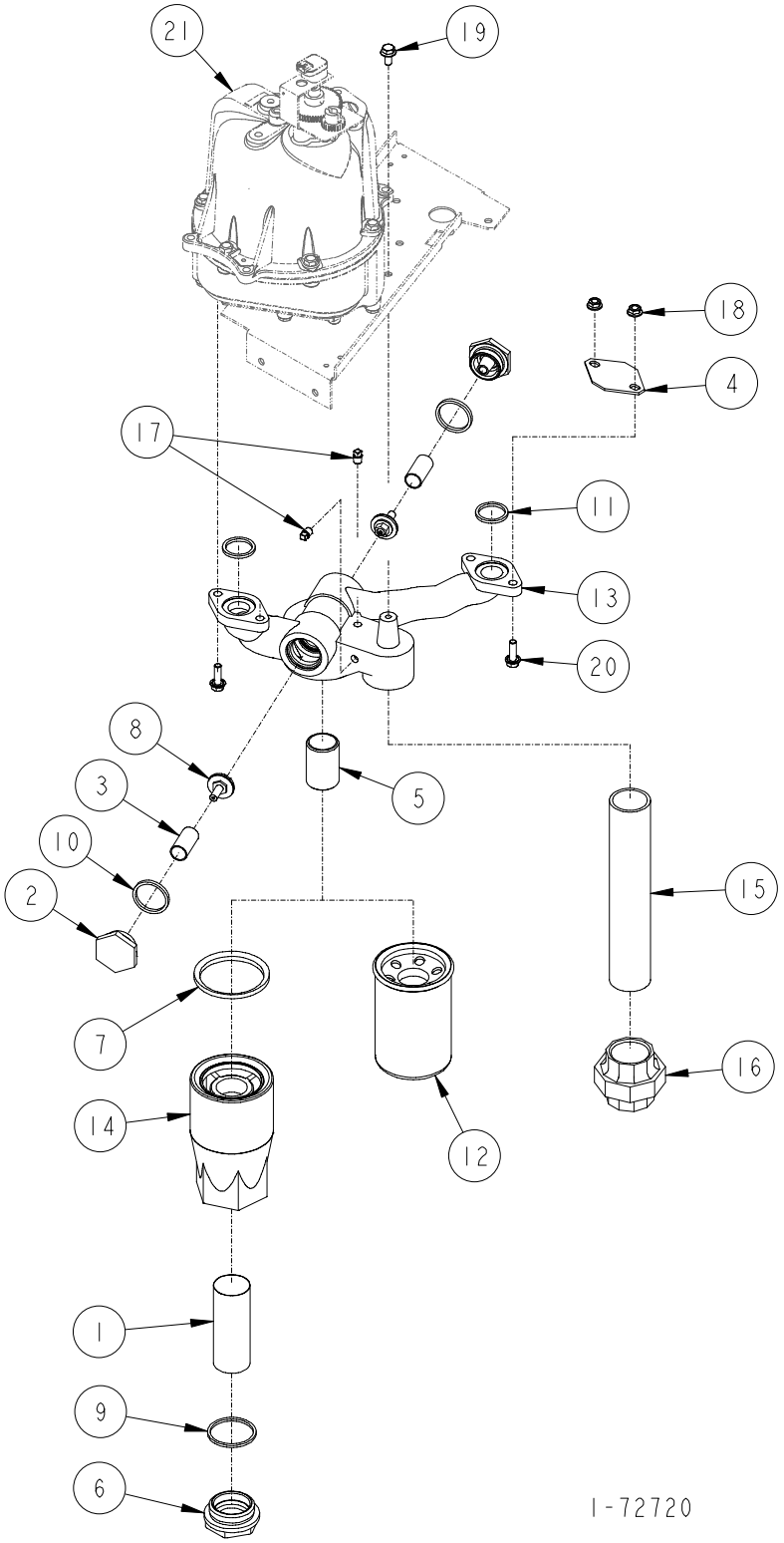

REMOTE CONTROL SYSTEM

(H311C, H312C, H411C, H412C, H413C & H414C)
(H311D, H312D, H411D, H412D, H413D & H414D)

ITEM NO.	PART NO.	DESCRIPTION
1	Strainer Screen	
	1-115075	Gas
	2-115075	Diesel
2	1-120731	Check Valve Cap
3	1-120733	Poppet Spring
4	1-228345	Manifold Cap
5	1-232801	Nipple
6	1-232289	Strainer Cap
7	1-232873	Gasket
8	1-321382	Pressure Relief Valve Assembly (not used in Canada)
9	2-313235	Gasket
10	6-313235	Gasket
11	13-313235	Gasket
12	Filter	
	1-320262	Standard
	2-320262	Alcohol
	3-320262	Gas, Diesel
13	Inlet Manifold	
	1-422025	Standard
	2-422025	Automatic Temperature Control (Canada)
14	1-422119	Strainer Body
15	130-50510	Pipe 1-1/2" x 10" Long
16	27-51780	1-1/2" Female Union
17	01-51911	1/8-27 Pipe Plug (Automatic Temperature Control Only)
18	02-54752	5/16-18 M-F Flange Whiz-Lock Nut
19	38-55132	5/16-18 x 5/8" Long M-F Flange Whiz Lock Screw
20	38-55132	5/16-18 x 1" Long M-F Flange Whiz Lock Screw
21	For parts call out of Meter & Transfer Body Assembly see 72727.	
	Reference for Tokheim internal use only:	
	321089	Meter & Hydraulic Assy

1-72720

8
A

REMOTE CONTROL SYSTEM

(H322C, H324C, H422C, H424C, H426C & H428C)
(H322D, H324D, H422D, H424D, H426D & H428D)

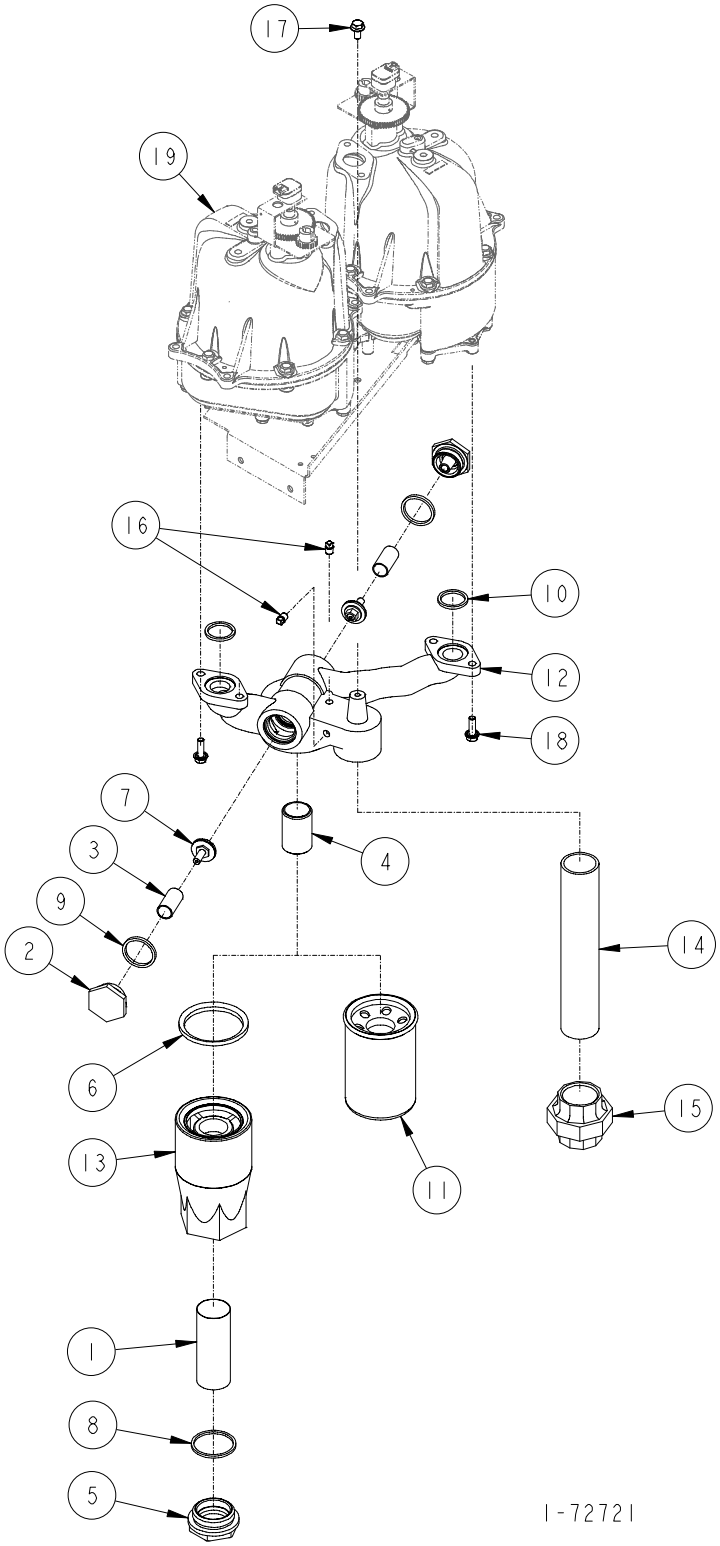

REMOTE CONTROL SYSTEM

(H322C, H324C, H422C, H424C, H426C & H428C)
(H322D, H324D, H422D, H424D, H426D & H428D)

ITEM NO.	PART NO.	DESCRIPTION
1	Strainer Screen	
	1-115075	Gas
	2-115075	Diesel
2	1-120731	Check Valve Cap
3	1-120733	Poppet Spring
4	1-232801	Nipple
5	1-232289	Strainer Cap
6	1-232873	Gasket
7	1-321382	Pressure Relief Valve Assembly (not used in Canada)
8	2-313235	Gasket
9	6-313235	Gasket
10	13-313235	Gasket
11	Filter	
	1-320262	Standard
	2-320262	Alcohol
	3-320262	Gas, Diesel
12	Inlet Manifold	
	1-422025	Standard
	2-422025	Automatic Temperature Control (Canada)
13	1-422119	Strainer Body
14	130-50510	Pipe 1-1/2" x 10" Long
15	27-51780	1-1/2" Female Union
16	01-51911	1/8-27 Pipe Plug (Automatic Temperature Control Only)
17	35-55132	5/16-18 x 5/8" Long M-F Flange Whiz Lock Screw
18	38-55132	5/16-18 x 1" Long M-F Flange Whiz Lock Screw
19	For parts call out of Meter & Transfer Body Assembly see 72727.	
	Reference for Tokheim internal use only:	
	320253	Filter/Check/Inlet Assembly

1-72721

8
A

SECTION 9

Suction Systems

Page Number

Suction System

H311C, H311D & H311C-SB3/5 ..... 9-2, 9-3
H312C, H312D 9-4, 9-5
H322C, H322D & H322C-SB3/5 ..... 9-6, 9-7
H324C, H324D 9-8, 9-9
H413C, H413D 9-10, 9-11
H424C-SB3/4 ..... 9-12, 9-13
H424C-SB3/4 (Canada) 9-14, 9-15
H426C, H426D 9-16, 9-17
H428C-SEB 9-18, 9-19

Motor Assembly

30″ Series 9-20, 9-21
45″ Series 9-22, 9-23

Rotary Pump Assembly 9-24, 9-25

Rotary Pump Mounting Assembly 9-26, 9-27

Rotary Pump & Air Separator ..... 9-28 — 9-30

SUCTION SYSTEM

H311C, H311D & 311C-SB3/5

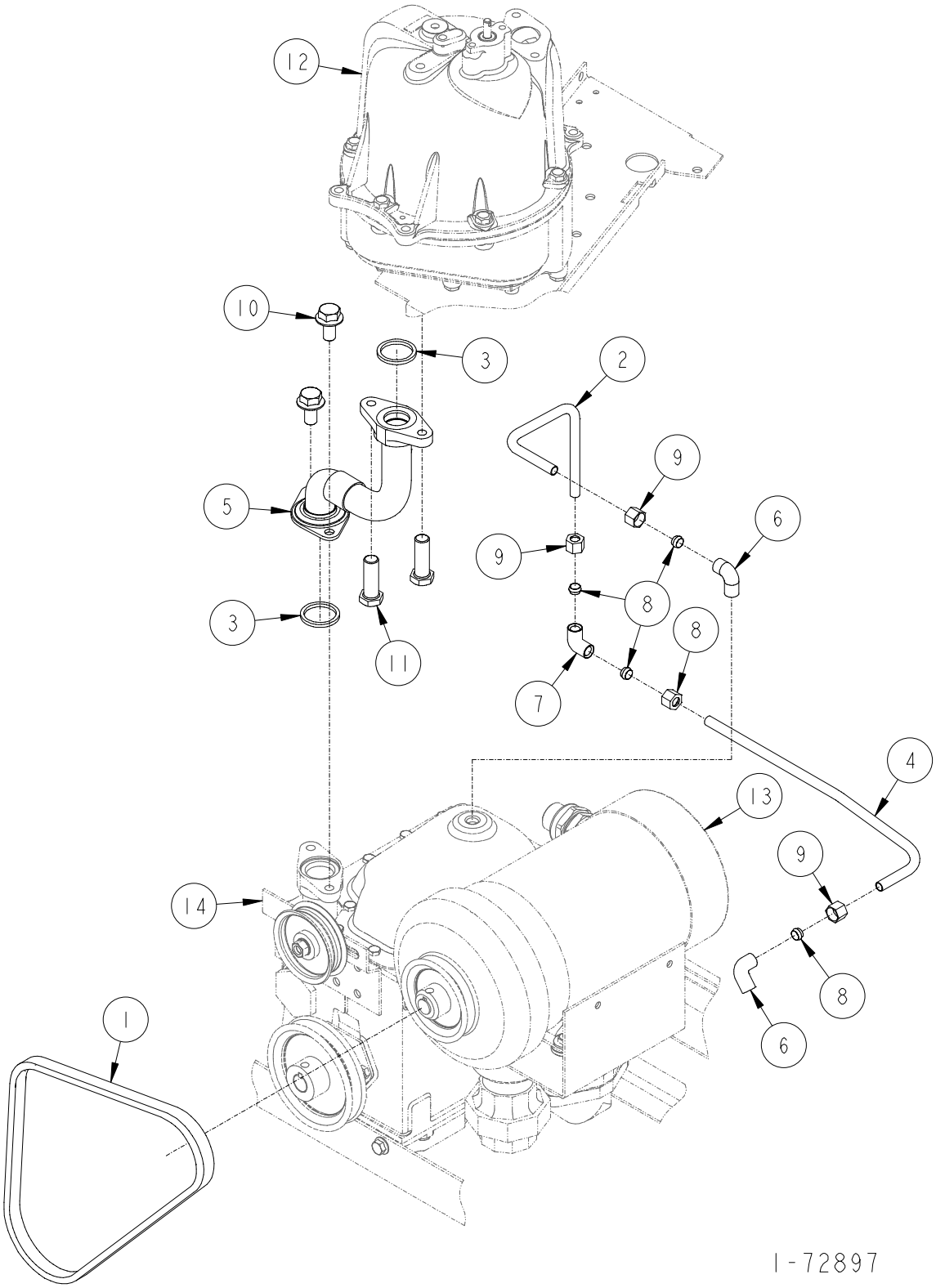

SUCTION SYSTEM

H311C, H311D & H311C-SB3/5

ITEM NO.	PART NO.	DESCRIPTION
1	V-Belt	
	2-37852	60hz
	3-37852	50hz
2	1-233736	Vapor Vent Tube
3	13-313235	Gasket
4	Vapor Vent Tube	
	1-321298	Non Vapor
	1-233739	Interim Vapor or Full Vapor
5	Inlet Manifold	
	1-422930	All models except Canada
	1-422931	Canada only
6	05-52020	Compression Elbow
7	14-52020	Compression Elbow
8	05-52040	Compression Sleeve
9	14-52040	Compression Nut
10	35-55132	5/16-18 x 5/8" Long MF-Flange Whiz Lock Screw
11	38-55132	5/16-18 x 1" Long MF-Flange Whiz Lock Screw
12	For parts call out of Meter & Hydraulics Assembly see.	
	72726	H311C & H311D
	72728	H311C-SB3/5
13	For parts call out of Motor Assembly see 72894.	
14	For parts call out of Rotary Pump Assembly see 72896.	
	Reference for Tokheim internal use only:	
	321204	Chassis Assembly

1-72897

9

SUCTION SYSTEM
H312C & H312D

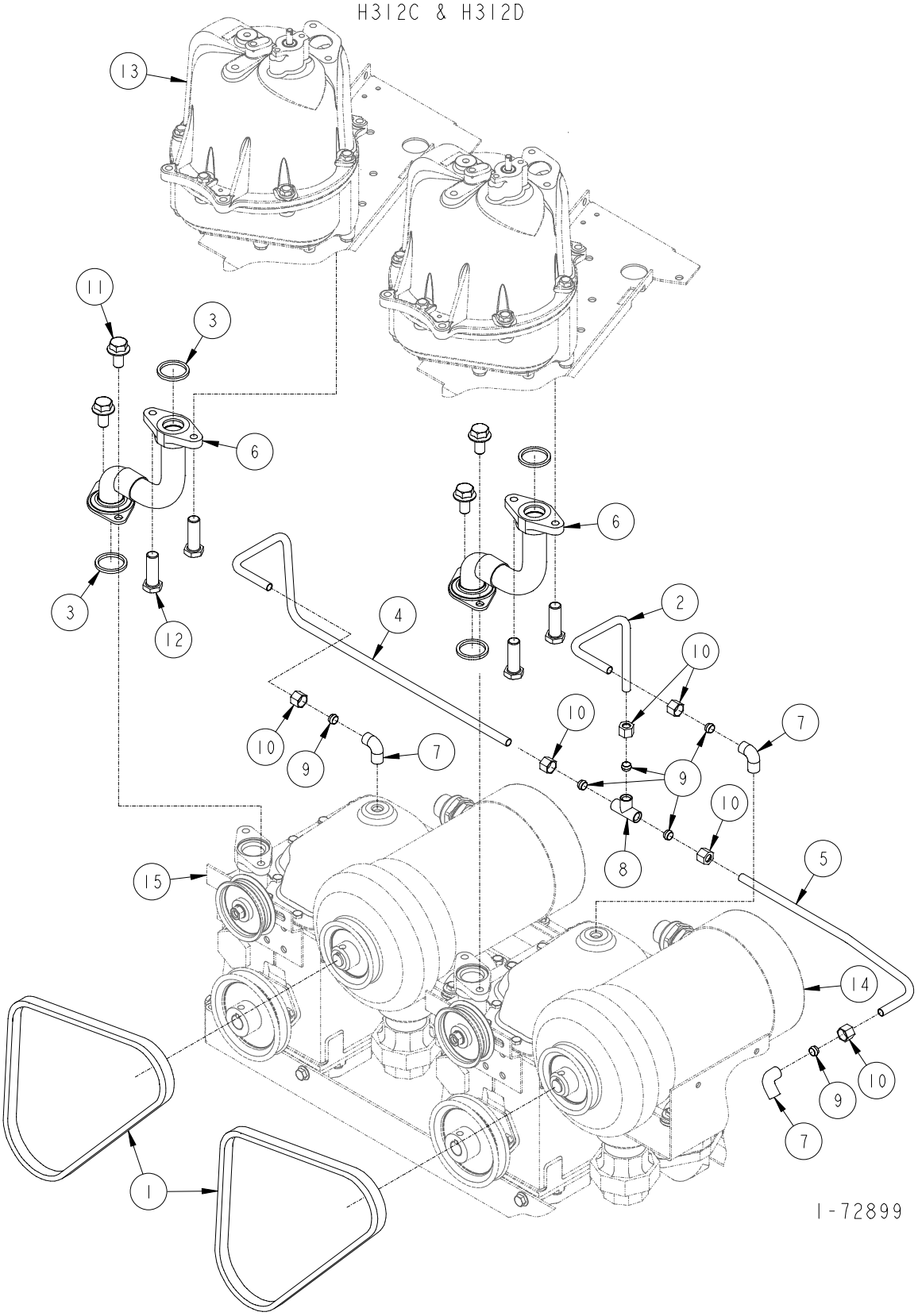

SUCTION SYSTEM

H312C & H312D

ITEM NO.	PART NO.	DESCRIPTION
1	V-Belt	
	2-37852	60hz
	3-37852	50hz
2	1-233736	Vapor Vent Tube
3	13-313235	Gasket
4	1-321291	Vapor Vent Tube
5	Vapor Vent Tube	
	1-321298	Non Vapor
	1-233739	Interim Vapor or Full Vapor
6	1-422930	Inlet Manifold
7	05-52020	Compression Elbow
8	05-52030	Compression Tee
9	05-52040	Compression Sleeve
10	14-52040	Compression Nut
11	35-55132	5/16-18 x 5/8" Long MF-Flange Whiz Lock Screw
12	38-55132	5/16-18 x 1" Long MF-Flange Whiz Lock Screw
13	For parts call out of Meter & Hydraulics Assembly see 72726.	
14	For parts call out of Motor Assembly see 72894.	
15	For parts call out of Rotary Pump Assembly see 72896.	
	Reference for Tokheim internal use only:	
	321204	Chassis Assembly

1-72899

9

SUCTION SYSTEM

H322C, H322D & H322C-SB3/5

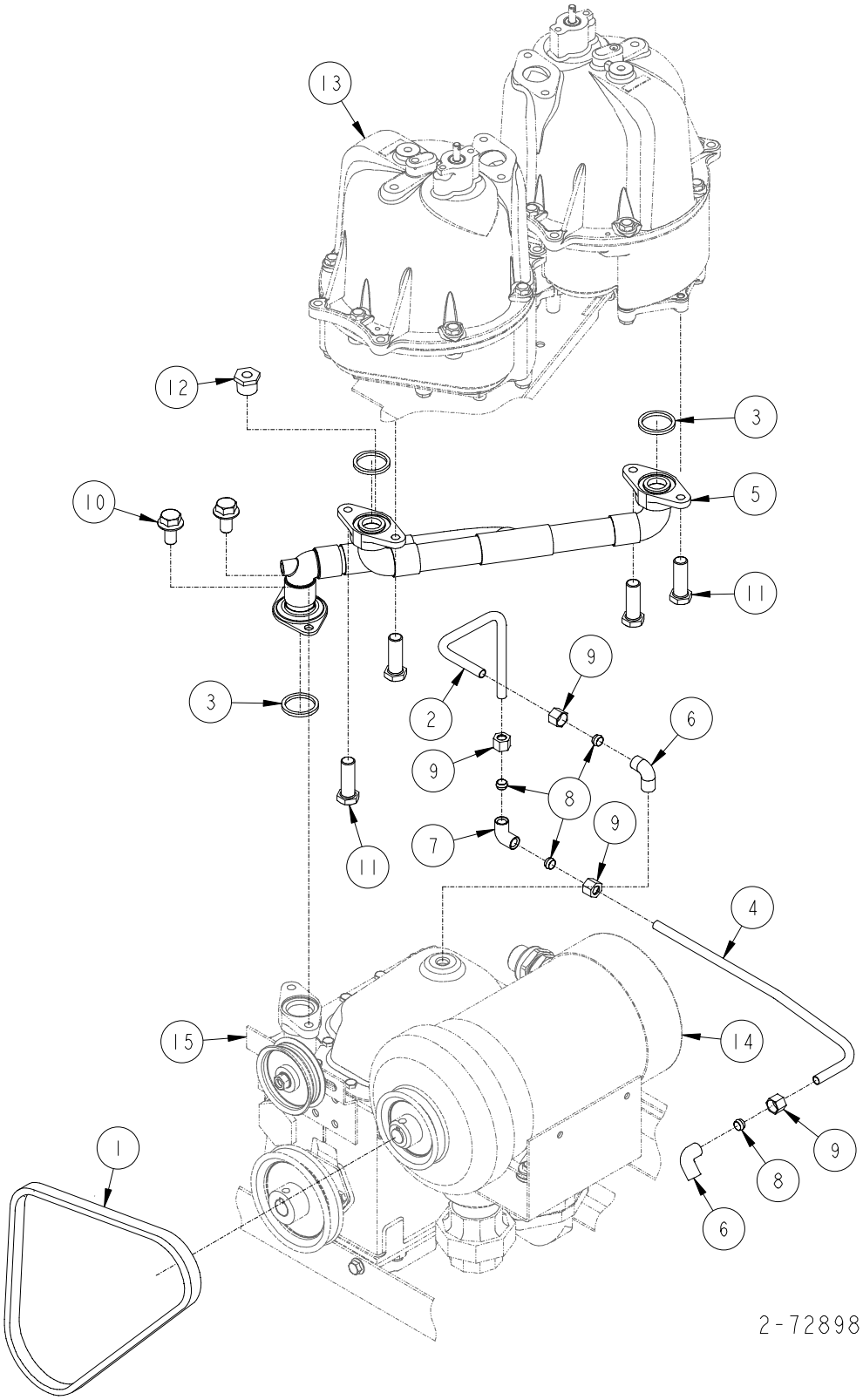

SUCTION SYSTEM

H322C, H322D & H322C-SB3/5

ITEM NO.	PART NO.	DESCRIPTION
1	V-Belt	
	2-37852	60hz
	3-37852	50hz
2	1-233736	Vapor Vent Tube
3	13-313235	Gasket
4	Vapor Vent Tube	
	1-321298	Non Vapor
	1-233739	Interim Vapor or Full Vapor
5	Inlet Manifold	
	1-422915	All models except Canada
	1-422916	Canada only
6	05-52020	Compression Elbow
7	14-52020	Compression Elbow
8	05-52040	Compression Sleeve
9	14-52040	Compression Nut
10	35-55132	5/16-18 x 5/8" Long MF-Flange Whiz Lock Screw
11	38-55132	5/16-18 x 1" Long MF-Flange Whiz Lock Screw
12	06-51850	1/2" x 1/8" Hex Bushing (Canada only)
13	For parts call out of Meter & Hydraulics Assembly see.	
	72726	H322C & H322D
	72728	H322C-SB3/5
14	For parts call out of Motor Assembly see 72894.	
15	For parts call out of Rotary Pump Assembly see 72896.	
	Reference for Tokheim internal use only:	
	321204	Chassis Assembly

2-72898

9

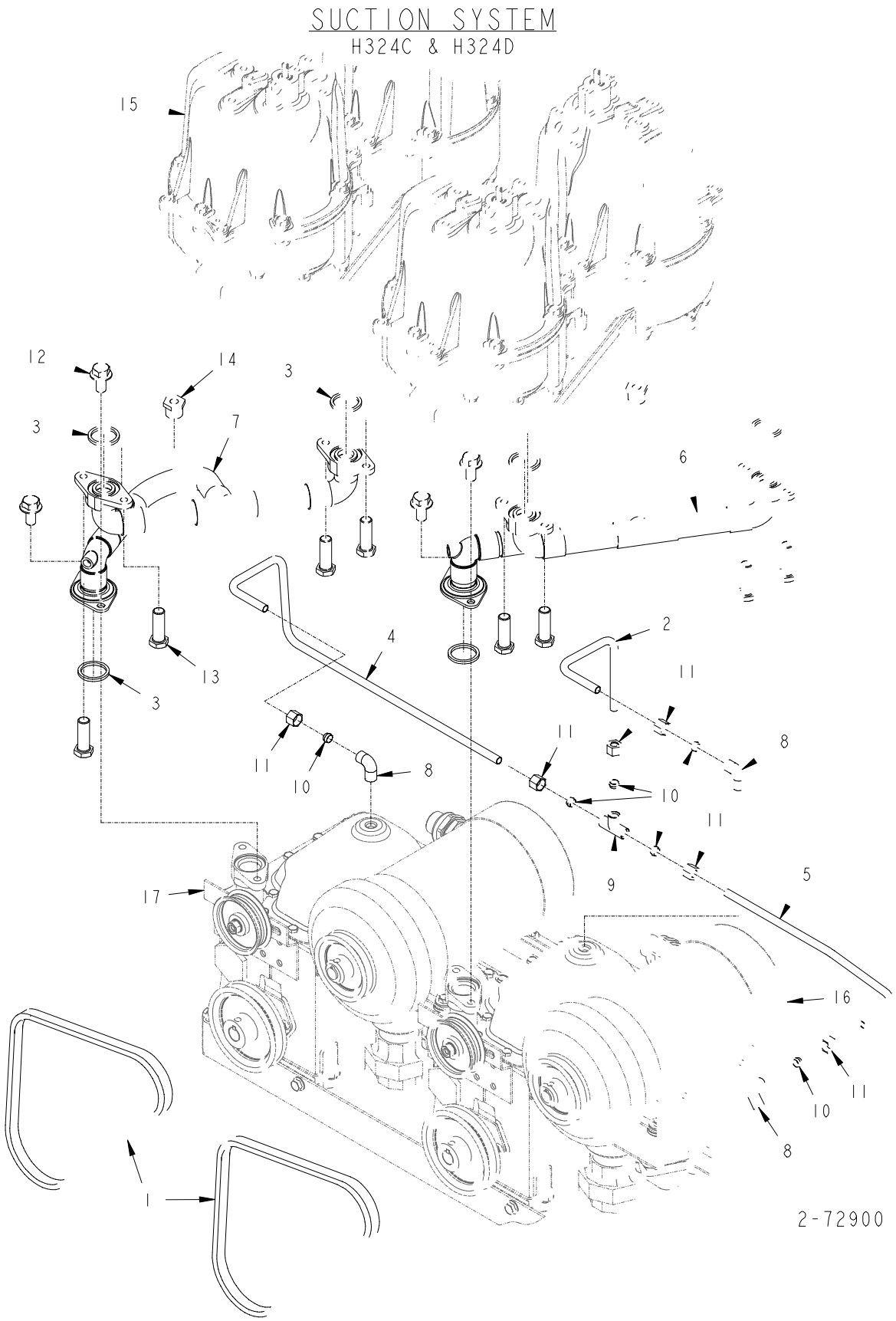
SUCTION SYSTEM
H324C & H324D
15
12
14
3
3
7
6
2
4
13
3
11
11
8
11
10
8
10
11
9
5
17
16
11
10
8
1
2-72900

SUCTION SYSTEM

H324C & H324D

ITEM NO.	PART NO.	DESCRIPTION
1	V-Belt	
	2-37852	60hz
	3-37852	50hz
2	1-233736	Vapor Vent Tube
3	13-313235	Gasket
4	1-321291	Vapor Vent Tube
5	Vapor Vent Tube	
	1-321298	Non Vapor
	1-233739	Interim Vapor or Full Vapor
6	Inlet Manifold	
	1-422915	All models except Canada
	1-422916	Canada only
7	Inlet Manifold	
	1-422932	All models except Canada
	1-422934	Canada only
8	05-52020	Compression Elbow
9	05-52030	Compression Tee
10	05-52040	Compression Sleeve
11	14-52040	Compression Nut
12	35-55132	5/16-18 x 5/8" Long MF-Flange Whiz Lock Screw
13	38-55132	5/16-18 x 1" Long MF-Flange Whiz Lock Screw
14	06-51850	1/2" x 1/8" Hex Bushing (Canada only)
15	For parts call out of Meter & Hydraulics Assembly see 72726.	
16	For parts call out of Motor Assembly see 72894.	
17	For parts call out of Rotary Pump Assembly see 72896.	
	Reference for Tokheim internal use only:	
	321204	Chassis Assembly

2-72900

9

SUCTION SYSTEM
H413C-S & H413D-S

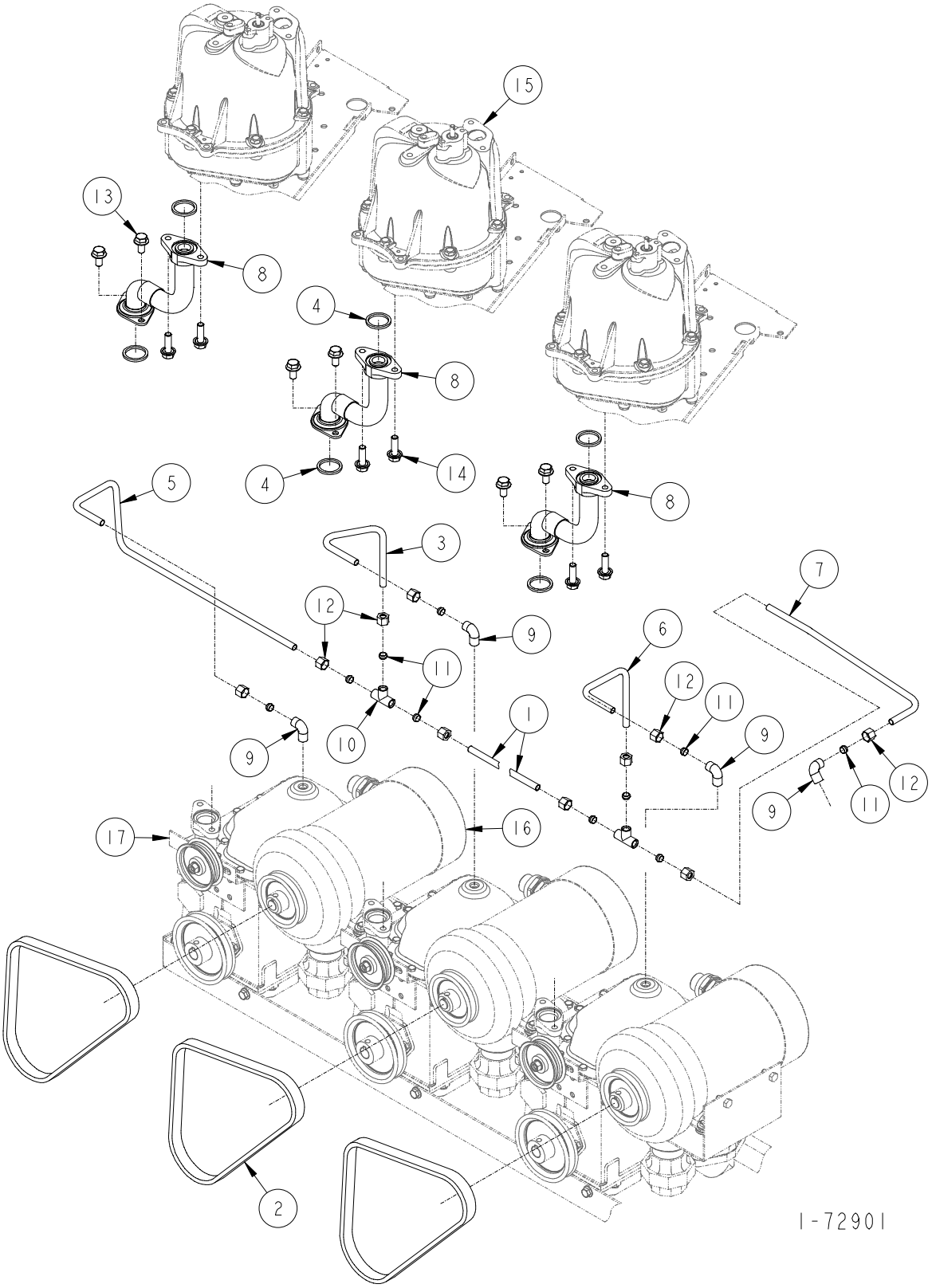

SUCTION SYSTEM

H413C & H413D

ITEM NO.	PART NO.	DESCRIPTION
1	13-225758	Vapor Vent Tube
2	V-Belt	
	2-37852	60hz
	3-37852	50hz
3	1-233736	Vapor Vent Tube
4	13-313235	Gasket
5	1-321291	Vapor Vent Tube
6	1-321345	Vapor Vent Tube
7	Vapor Vent Tube	
	1-321344	Non Vapor
	1-321346	Interim Vapor or Full Vapor
8	1-422930	Inlet Manifold
9	05-52020	Compression Elbow
10	05-52030	Compression Tee
11	05-52040	Compression Sleeve
12	14-52040	Compression Nut
13	35-55132	5/16-18 x 5/8" Long MF-Flange Whiz Lock Screw
14	38-55132	5/16-18 x 1" Long MF-Flange Whiz Lock Screw
15	For parts call out of Meter & Hydraulics Assembly see 72726.	
16	For parts call out of Motor Assembly see 72895.	
17	For parts call out of Rotary Pump Assembly see 72896.	
	Reference for Tokheim internal use only:	
	321153	Chassis Assembly

1-72901

9

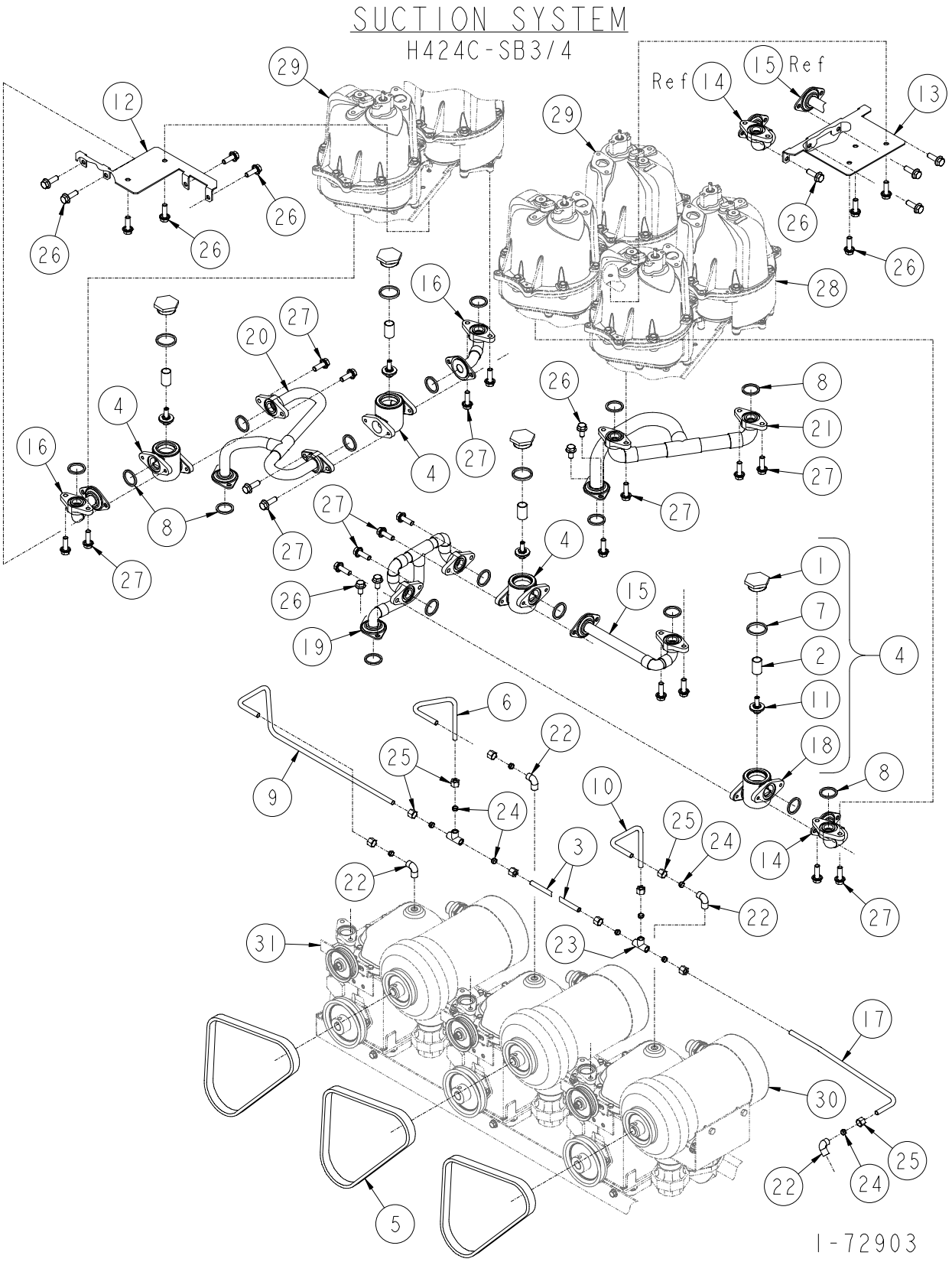
SUCTION SYSTEM
H424C-SB3/4
Ref
Ref
1-72903

SUCTION SYSTEM

H424C-SB3/4

ITEM NO.	PART NO.	DESCRIPTION
1	1-120731	Check Valve Cap
2	1-120733	Check Valve Spring
3	13-225758	Vapor Vent Tube
4	229228-6	Check Valve Assembly
5	V-Belt	
	2-37852	60hz
	3-37852	50hz
6	1-233736	Vapor Vent Tube
7	6-313235	Check Valve Cap Gasket
8	13-313235	Gasket
9	1-321291	Vapor Vent Tube
10	1-321345	Vapor Vent Tube
11	1-321382	Pressure Relief Valve Assembly (not used in Canada)
12	1-330014	Check Valve Bracket
13	1-330015	Check Valve Bracket
14	1-330016	Inlet Tube
15	1-330017	Inlet Tube
16		
17	Vapor Vent Tube	
	1-321344	Non Vapor
	1-321346	Interim Vapor or Full Vapor
18	3-418686	Check Valve Body
19	1-422886	Inlet Manifold
20	1-422903	Inlet Manifold
21	1-422915	Inlet Manifold
22	05-52020	Compression Elbow
23	05-52030	Compression Tee
24	05-52040	Compression Sleeve
25	14-52040	Compression Nut
26	35-55132	5/16-18 x 5/8" Long MF Flange Whiz Lock Screw
27	38-55132	5/16-18 x 1" Long MF Flange Whiz Lock Screw
28	For parts call out of Meter & Hydraulics Assembly see 72726.	
29	For parts call out of Meter & Hydraulics Assembly see 72728.	
30	For parts call out of Motor Assembly see 72895.	
31	For parts call out of Rotary Pump Assembly see 72896.	
	Reference for Tokheim internal use only:	
	321153	Chassis Assembly

1-72903

SUCTION SYSTEM

H424C-SB3/4
CANADA

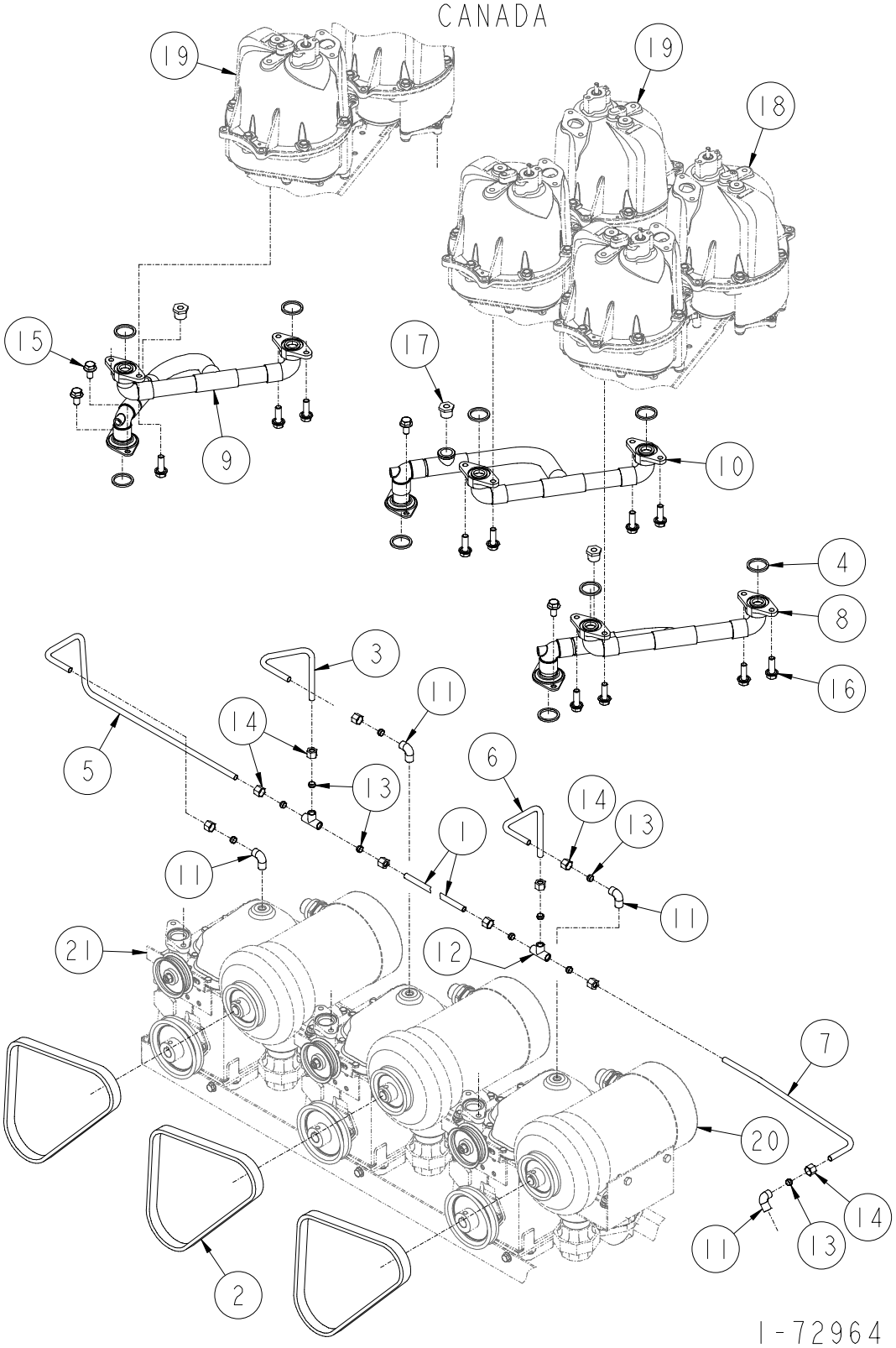

SUCTION SYSTEM

H424C-SB3/4

CANADA

ITEM NO.	PART NO.	DESCRIPTION
1	13-225758	Vapor Vent Tube
2	V-Belt	
	2-37852	60hz
	3-37852	50hz
3	1-233736	Vapor Vent Tube
4	13-313235	Gasket
5	1-321291	Vapor Vent Tube
6	1-321345	Vapor Vent Tube
7	Vapor Vent Tube	
	1-321344	Non Vapor
	1-321346	Interim Vapor or Full Vapor
8	1-422916	Inlet Manifold
9	1-422918	Inlet Manifold
10	1-423004	Inlet Manifold
11	05-52020	Compression Elbow
12	05-52030	Compression Tee
13	05-52040	Compression Sleeve
14	14-52040	Compression Nut
15	35-55132	5/16-18 x 5/8" Long MF Flange Whiz Lock Screw
16	38-55132	5/16-18 x 1" Long MF Flange Whiz Lock Screw
17	06-51850	1/2" x 1/8" Hex Bushing (Canada only)
18	For parts call out of Meter & Hydraulics Assembly see 72726.	
19	For parts call out of Meter & Hydraulics Assembly see 72728.	
20	For parts call out of Motor Assembly see 72895.	
21	For parts call out of Rotary Pump Assembly see 72896.	
	Reference for Tokheim internal use only:	
	321153	Chassis Assembly

1-72964

SUCTION SYSTEM

H426C-S & H426D-S

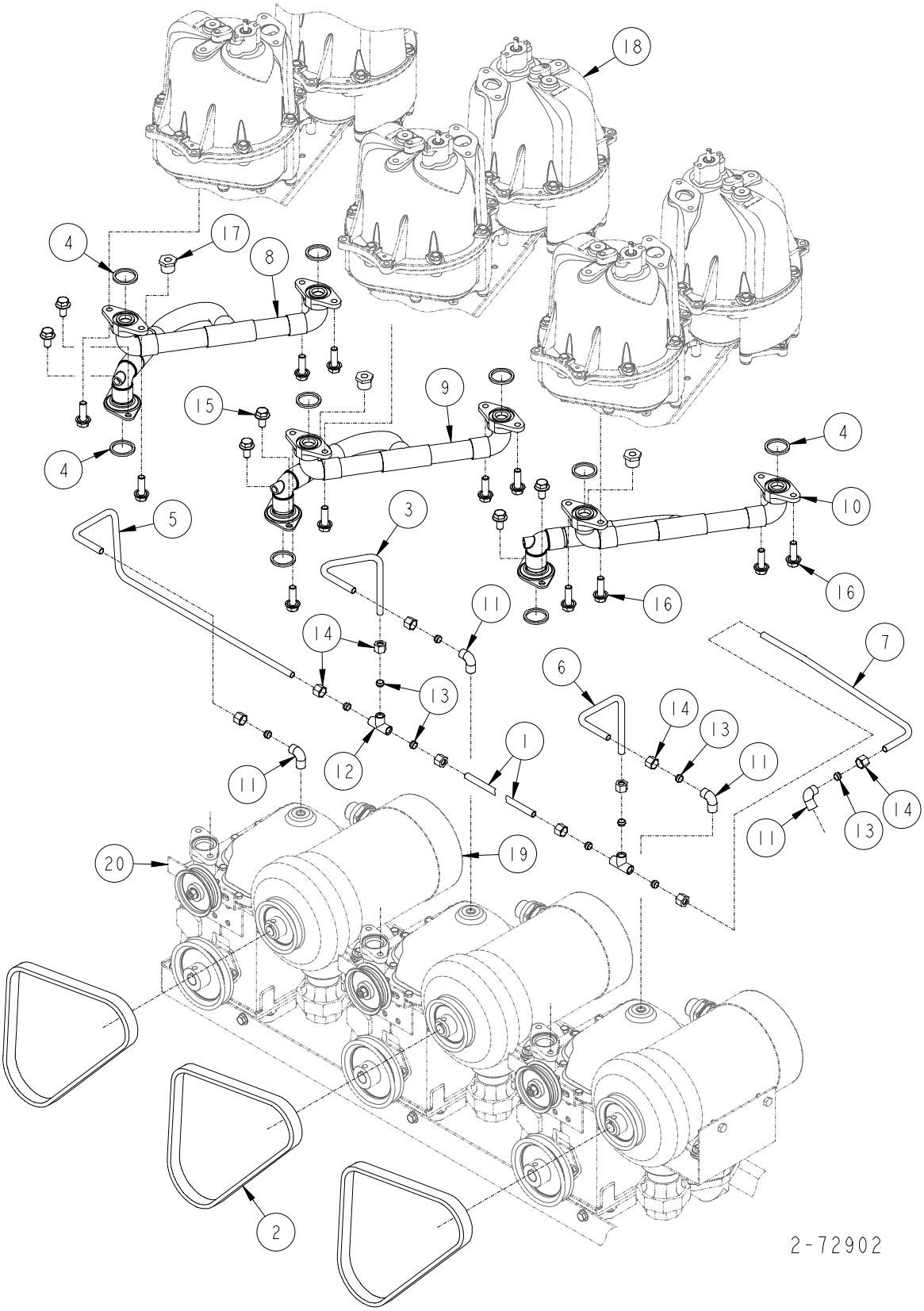

SUCTION SYSTEM

H426C & H426D

ITEM NO.	PART NO.	DESCRIPTION
1	13-225758	Vapor Vent Tube
2	V-Belt	
	2-37852	60hz
	3-37852	50hz
3	1-233736	Vapor Vent Tube
4	13-313235	Gasket
5	1-321291	Vapor Vent Tube
6	1-321345	Vapor Vent Tube
7	Vapor Vent Tube	
	1-321344	Non Vapor
	1-321346	Interim Vapor or Full Vapor
8	Inlet Manifold	
	1-422913	All models except Canada
	1-422918	Canada only
9	Inlet Manifold	
	1-422914	All models except Canada
	1-422917	Canada only
10	Inlet Manifold	
	1-422915	All models except Canada
	1-422916	Canada only
11	05-52020	Compression Elbow
12	05-52030	Compression Tee
13	05-52040	Compression Sleeve
14	14-52040	Compression Nut
15	35-55132	5/16-18 x 5/8" Long MF-Flange Whiz Lock Screw
16	38-55132	5/16-18 x 1" Long MF-Flange Whiz Lock Screw
17	06-51850	1/2" x 1/8" Hex Bushing (Canada only)
18	For parts call out of Meter & Hydraulics Assembly see 72726.	
19	For parts call out of Motor Assembly see 72895.	
20	For parts call out of Rotary Pump Assembly see 72896.	
	Reference for Tokheim internal use only:	
	321153	Chassis Assembly

2-72902

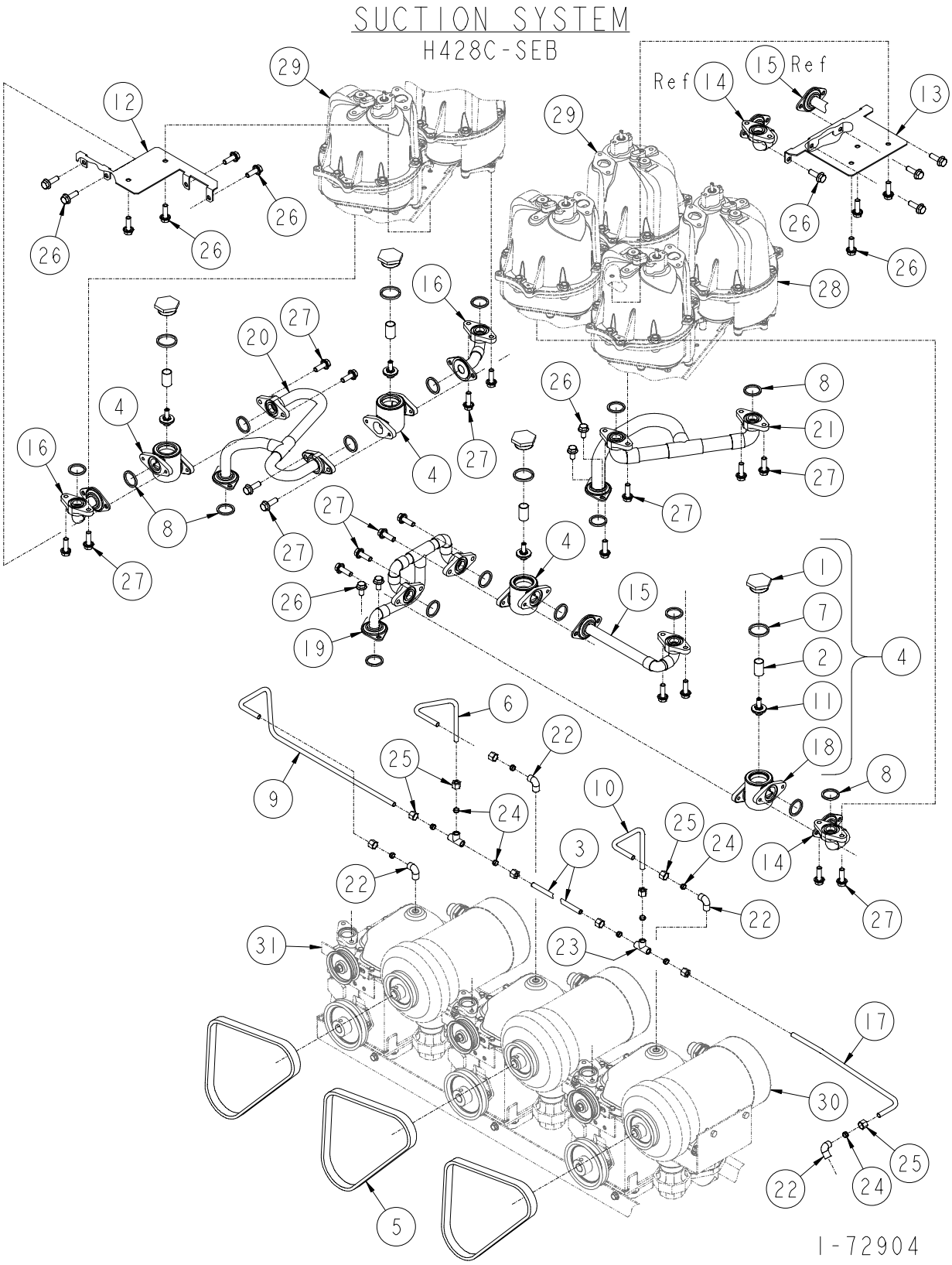
SUCTION SYSTEM
H428C-SEB
Ref
Ref
1-72904

SUCTION SYSTEM

H428C-SEB

ITEM NO.	PART NO.	DESCRIPTION
1	1-120731	Check Valve Cap
2	1-120733	Check Valve Spring
3	13-225758	Vapor Vent Tube
4	229228-6	Check Valve Assembly
5	V-Belt	
	2-37852	60hz
	3-37852	50hz
6	1-233736	Vapor Vent Tube
7	6-313235	Check Valve Cap Gasket
8	13-313235	Gasket
9	1-321291	Vapor Vent Tube
10	1-321345	Vapor Vent Tube
11	1-321382	Pressure Relief Valve Assembly (not used in Canada)
12	1-330014	Check Valve Bracket
13	1-330015	Check Valve Bracket
14	1-330016	Inlet Tube
15	1-330017	Inlet Tube
16		
17	Vapor Vent Tube	
	1-321344	Non Vapor
	1-321346	Interim Vapor or Full Vapor
18	3-418686	Check Valve Body
19	1-422886	Inlet Manifold
20	1-422903	Inlet Manifold
21	1-422915	Inlet Manifold
22	05-52020	Compression Elbow
23	05-52030	Compression Tee
24	05-52040	Compression Sleeve
25	14-52040	Compression Nut
26	35-55132	5/16-18 x 5/8" Long MF Flange Whiz Lock Screw
27	38-55132	5/16-18 x 1" Long MF Flange Whiz Lock Screw
28	For parts call out of Meter & Hydraulics Assembly see 72726.	
29	For parts call out of Meter & Hydraulics Assembly see 72730.	
30	For parts call out of Motor Assembly see 72895.	
31	For parts call out of Rotary Pump Assembly see 72896.	
	Reference for Tokheim internal use only:	
	321153	Chassis Assembly

1-72904

30" MOTOR ASSEMBLY

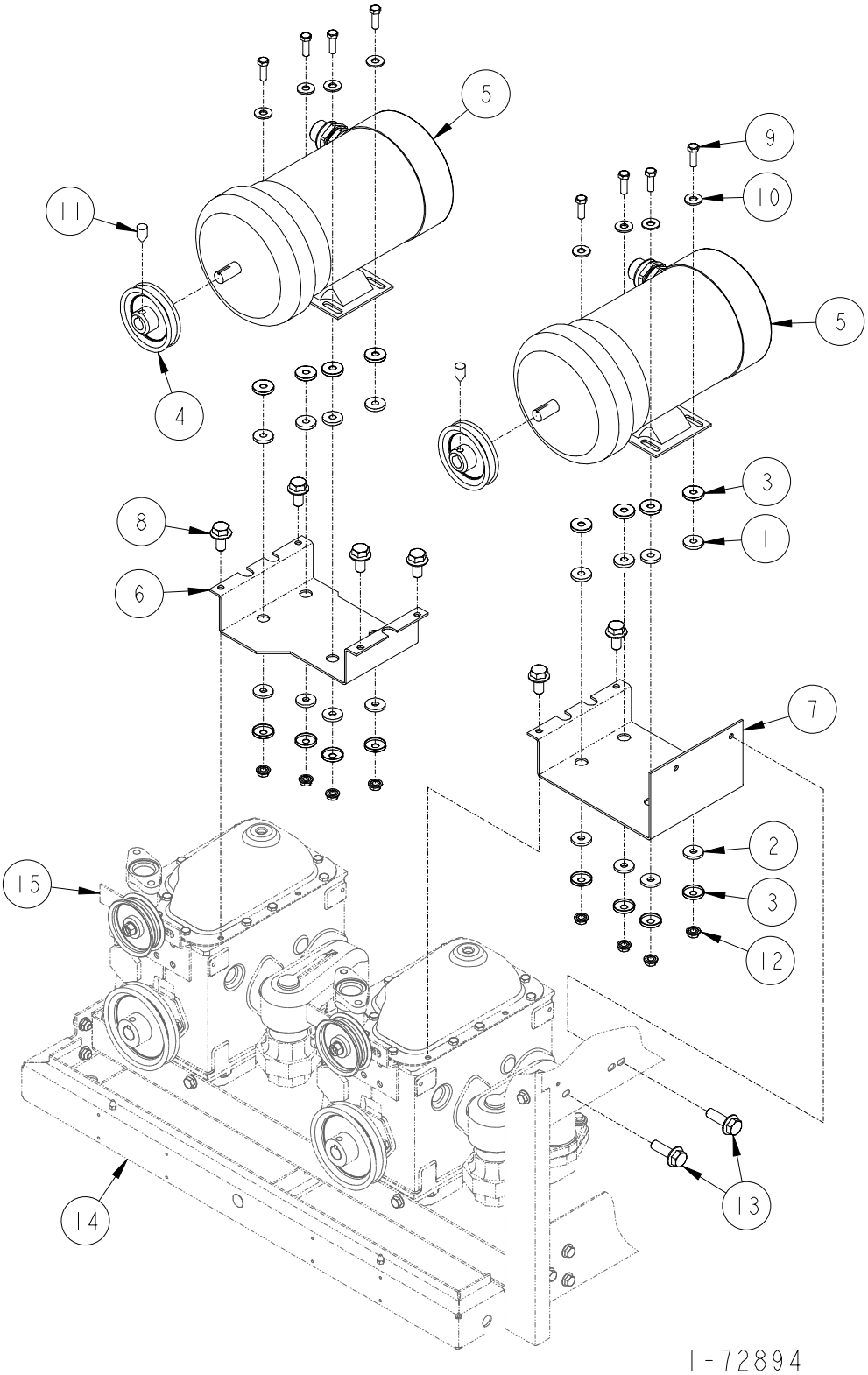

30" MOTOR ASSEMBLY

ITEM NO.	PART NO.	DESCRIPTION
1	1-114468	Cushion Grommet
2	1-114469	Cushion Washer
3	1-114470	Cushion Retainer
4	Motor Pulley	
	1-119529	115/220/230 Volt
	1-220878	380 Volt
5	Motor Assembly (Franklin Electric	
	321301-1	380 Volt 60/50 Cycle Three Phase
	321301-2	220 Volt 60/50 Cycle Three Phase
	321301-3	115 Volt 60/50 Cycle Single Phase
	321301-4	230 Volt 60/50 Cycle Single Phase
	321301-5	115 Volt 60/50 Cycle Single Phase (Fungus Proof)
	321301-6	230 Volt 60/50 Cycle Single Phase (Fungus Proof)
6	1-422904	Motor Support Plate
7	1-422905	Motor Support Plate
8	01-50360	1/4-20 x 1/2" Long Hex Head Cap Screw
9	35-50361	5/16-18 x 1" Long Hex Head Cap Screw
10	03-50611	5/16" Plate Washer
11	65-50721	5/16-18 x 1/4" Long Hex Socket Head Cup Point Set Screw
12	02-54752	5/16-18 M-F Flange Whiz Lock Nut
13	20-51491	5/16 x 3/4" Long Hex Head Self Tapping Screw
14	For parts call out of Chassis Assembly see 72779.	
15	For parts call out of Motor Assembly see 72895.	
16	For parts call out of Rotary Pump Assembly see 72896.	
	Reference for Tokheim internal use only:	
	321204	Chassis Assembly

1-72894

9

45" MOTOR ASSEMBLY

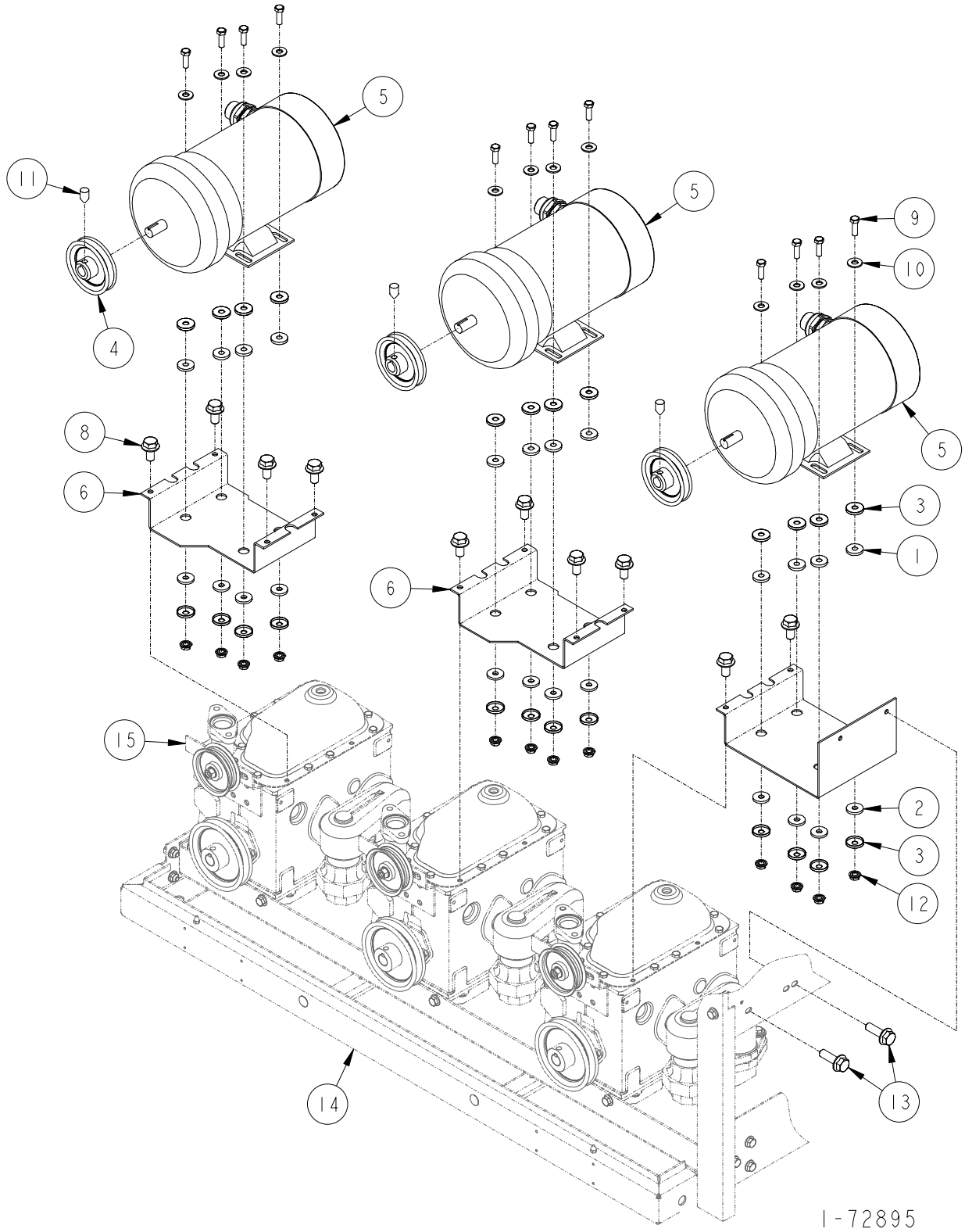

45" MOTOR ASSEMBLY

ITEM NO.	PART NO.	DESCRIPTION
1	1-114468	Cushion Grommet
2	1-114469	Cushion Washer
3	1-114470	Cushion Retainer
4	Motor Pulley	
	1-119529	115/220/230 Volt
	1-220878	380 Volt
5	Motor Assembly	
	321301-1	380 Volt 60/50 Cycle Three Phase
	321301-2	220 Volt 60/50 Cycle Three Phase
	321301-3	115 Volt 60/50 Cycle Single Phase
	321301-4	230 Volt 60/50 Cycle Single Phase
	321301-5	115 Volt 60/50 Cycle Single Phase (Fungus Proof)
	321301-6	230 Volt 60/50 Cycle Single Phase (Fungus Proof)
6	1-422904	Motor Support Plate
7	1-422905	Motor Support Plate
8	01-50360	1/4-20 x 1/2" Long Hex Head Cap Screw
9	35-50361	5/16-18 x 1" Long Hex Head Cap Screw
10	03-50611	5/16" Plate Washer
11	65-50721	5/16-18 x 1/4" Long Hex Socket Head Cup Point Set Screw
12	02-54752	5/16-18 M-F Flange Whiz Lock Nut
13	20-51491	5/16 x 3/4" Long Hex Head Self Tapping Screw
14	For parts call out of Chassis Assembly see 72724.	
15	For parts call out of Rotary Pump Assembly see 72896.	
	Reference for Tokheim internal use only:	
	321153	Chassis Assembly

1-72895

9

ROTARY PUMP ASSEMBLY

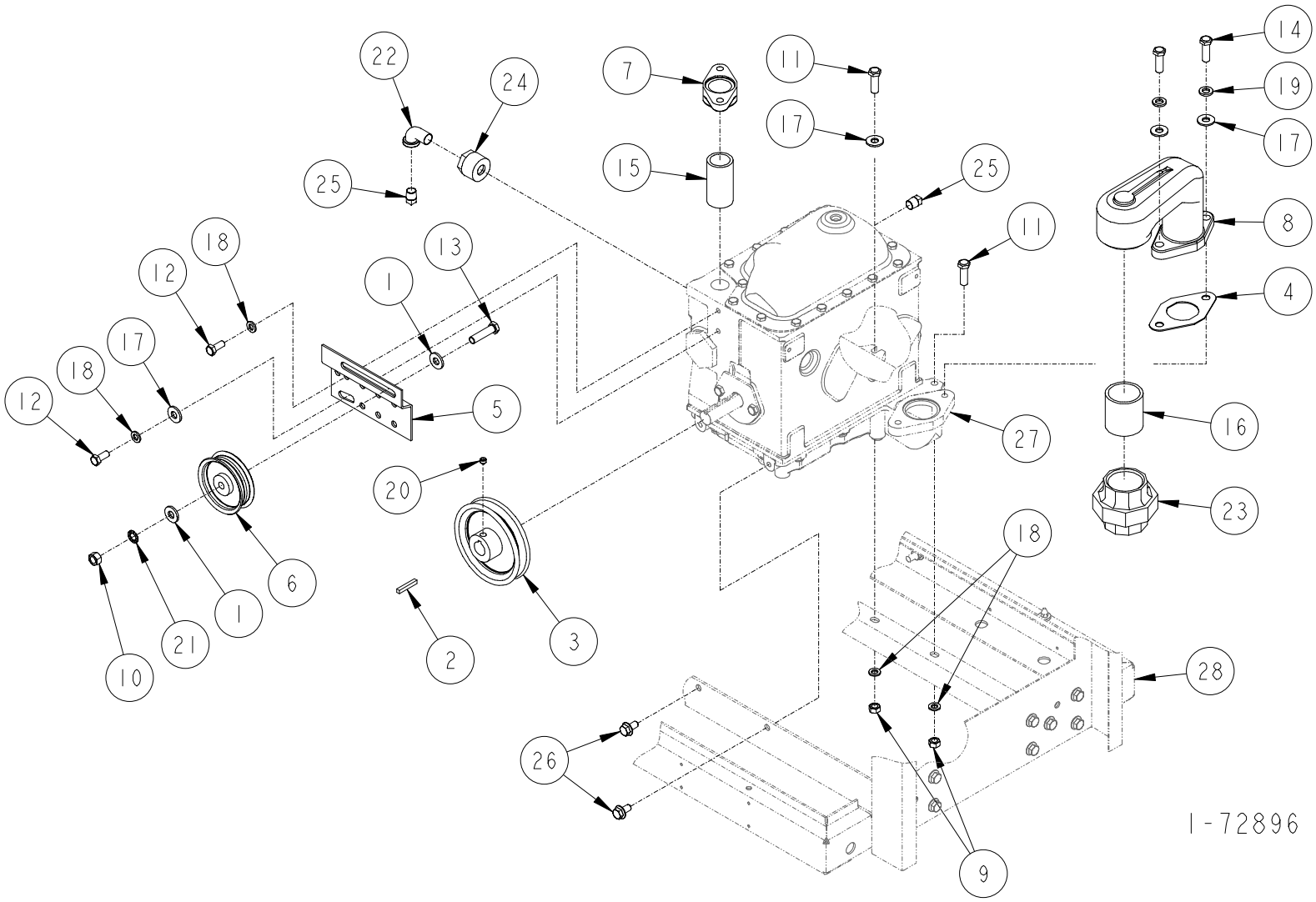

ROTARY PUMP ASSEMBLY

ITEM NO.	PART NO.	DESCRIPTION
1	2-13867	Washer
2	1-119636	Key
3	1-216295	Pump Pulley
4	1-217902	Pump Inlet Connection Gasket
5	1-220849	Idler Arm
6	1-221668	Idler Pulley
7	1-220923	Meter Flange
8	1-38510	Pump Inlet Connection
9	02-50301	5/16-18 Hex Nut
10	03-50301	3/8-16 Hex Nut
11	36-50361	1/4-28 x 1-1/4" Long Hex Head Cap Screw
12	33-50361	5/16-18 x 3/4" Long Hex Head Cap Screw
13	67-50361	3/8-16 x 1-1/2" Long Hex Head Cap Screw
14	297-50361	3/8-16 x 1-1/8" Long Hex Head Cap Screw
15	87-50560	1" x 2-1/2" Long Pipe Nipple
16	117-50560	1-1/2" x 1-3/4" Long Pipe
17	03-50611	5/16" Plate Washer
18	14-50641	5/16" Lockwasher
19	15-50641	3/8" Lockwasher
20	65-50721	5/16-18 x 1/4" Long Hex Socket Head Cup Point Set Screw
21	27-50761	3/8" Lockwasher
22	02-51711	1/4" x 90° Street Elbow (Brazil)
23	27-51780	1-1/2" Female Union
24	14-51851	1" x 1/4" Hex Bushing (Brazil)
25	02-51911	1/4" Pipe Plug
26	35-55132	5/16-18 x 5/8" Long M-F Flange Whiz Lock Screw
27	For parts call out of Rotary Pump & Air Separator see 741566.	
21	For parts call out of Rotary Pump Mounting Assembly see 7290.	

For complete Rotary Pump Assembly order:
405952-51
428203-10 Pump & Inlet Assembly

For complete Idler Arm & Pulley Assembly order:
37277-16

Reference for Tokheim internal use only:
321153 45" Chassis Assembly
321204 30" Chassis Assembly

1-72896

ROTARY PUMP MOUNTING ASSEMBLY
(30" SHOWN)

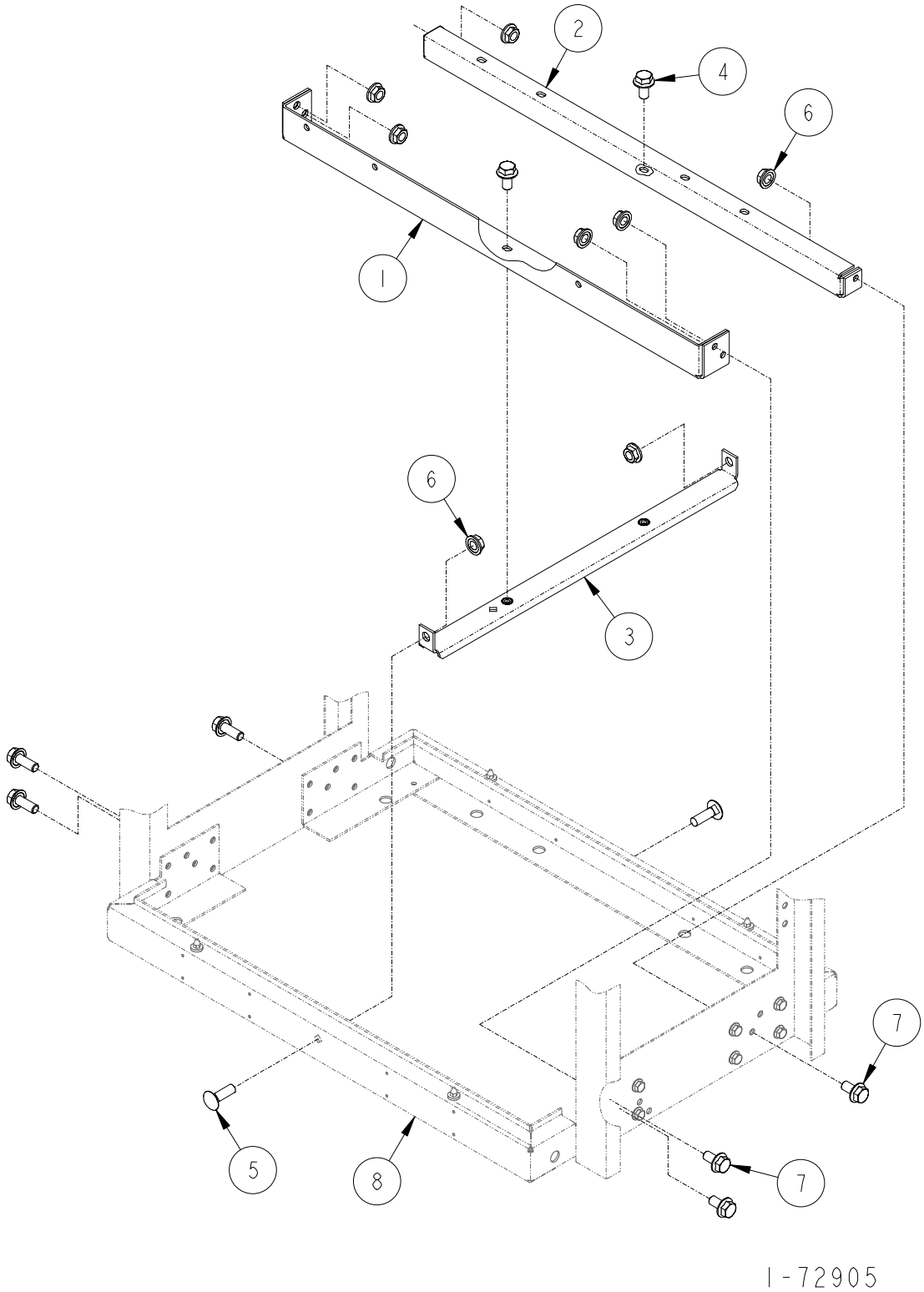

ROTARY PUMP MOUNTING ASSEMBLY
(30" SHOWN)

ITEM NO.	PART NO.	DESCRIPTION
1	Front Pump Mounting Brace	
	1-422584	45"
	1-422614	30"
2	Rear Pump Mounting Brace	
	1-422585	45"
	1-422615	30"
3	1-422610	Pump Mounting Support
4	20-51491	5/16 x 3/4" Hex Head Self Tapping Screw
5	39-52198	5/16-18 x 1" Long Carriage Bolt
6	02-54752	5/16-18 M-F Flange Whiz Lock Nut
7	38-55132	5/16-18 x 1" Long MF-Flange Whiz Lock Screw
8	For parts call out of Chassis Assembly see.	
	72724	45"
	72779	30"
	Reference for Tokheim internal use only:	
	321153	45" Chassis Assembly
	321204	30" Chassis Assembly

1-72905

ROTARY PUMP & AIR SEPARATOR

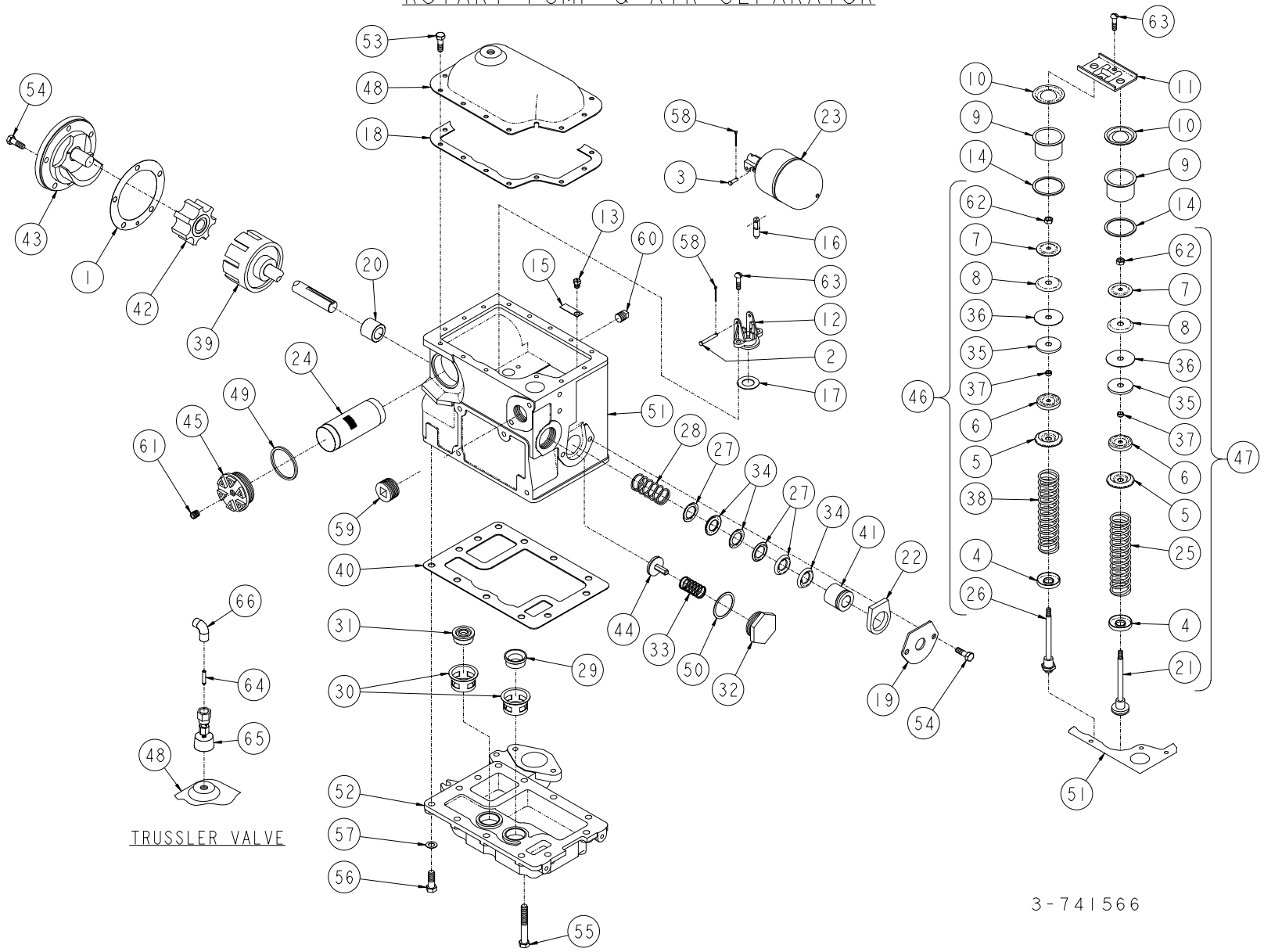

ROTARY PUMP & AIR SEPARATOR

ITEM NO.	PART NO.	DESCRIPTION
1	1-17526	Gasket
2	1-18654	Float Lever Pin
3	1-18655	Valve Pin
4	1-18716	Guide Plate
5	1-18717	Spring Plate
6	1-18718	Plunger Head
7	1-18719	Plunger Plate
8	1-18720	Plunger Follower
9	1-18721	Valve Cylinder
10	1-18722	Cylinder Head
11	1-18731	Clamp Plate
12	1-18734	Float Valve Body
13	1-18750	Vent Screw
14	1-18792	Valve Cylinder Gasket
15	1-18799	Vent Screw Guard
16	1-18860	Float Valve Needle
17	1-18961	Float Valve Gasket
18	2-113691	Cover Gasket
19	1-113698	Retainer
20	1-113703	Bearing
21	113776-1	Regulating Poppet Assembly
22	1-113819	Oil Well Felt
23	114064-1	Float Assembly
24	1-115075	Suction Screen
25	1-115642	Regulating Valve Spring
26	1-116628	By-Pass Valve Poppet
27	1-117475	Packing Gland
28	1-117660	Packing Spring
29	1-118590	Regulating Valve Seat
30	1-118591	Valve Seat Guide
31	1-118640	By-Pass Valve Seat
32	2-120731	Check Valve Cap
33	1-120733	Poppet Spring
34	1-121394	“V” Packing
35	1-126295	Plunger Guide
36	1-126343	Plunger Disc
37	1-126344	Plunger Spacer
38	By-Pass Valve Spring	
	1-18735	34 to 35-1/2 Lbs.
	1-19048	53 Lbs.
	1-131178	44-1/2 Lbs.
	1-230439	60 lbs.
	1-231015	60 lbs. (Stainless Steel)
39	25664-1	Pump Rotor Shaft Assembly
40	1-25879	Bottom Head Gasket
41	1-210024	Drive Shaft Bearing
42	1-211816	Rotary Pump Idler
43	211818-1	Rotary Pump Head Assembly
44	213168-1	Poppet Disc & Relief Valve Assembly
45	1-232289	Strainer Cap

ROTARY PUMP & AIR SEPARATOR

ITEM NO.	PART NO.	DESCRIPTION
46	217897-5	By-Pass Valve Assembly (44-1/2 Lbs)
47	217898-1	Regulating Valve Assembly
48	1-32089	Separator Cover
49	2-313235	Gasket
50	21-313235	Gasket
51	2-402334	Rotary Pump & Separator Body (Note: Order also (1 ea) Item #13, (2 ea) Item #14, (1 ea) Item #15, (1 ea) Item #17, (1 ea) Item #20, (1 ea) Item#22, (3 ea) Item #27, (1 ea), Item #28, (3 ea) Item #34, (1 ea) Item #40, (1 ea) Item #41, (1 ea) Item #49, (1 ea) Item #50
52	408143-2	Lower Pump Head With Valve Seat Guides, Regulating Valve Seat
53	01-50360	1/4-20 x 1/2" Long Hex Head Cap Screw
54	34-50360	5/16-18 x 7/8" Long Hex Head Cap Screw
55	71-50360	3/8-16 x 2-1/2" Long Hex Head Cap Screw
56	297-50360	3/8-16 x 1-1/8" Long Hex Head Cap Screw
57	15-50641	3/8" Lockwasher
58	17-51210	1/16" Dia. x 1/2" Long Cotter Pin
59	27-51901	1" Pipe Plug
60	02-51911	1/4" Square Head Pipe Plug
61	38-51911	1/4" Countersunk Pipe Plug
62	01-52321	1/4-28 Hex Nut
63	403-54921	1/4-20 x 7/8" Long Phillips Pan Head Machine Screw
64	1-132735	Valve Stem
65	1-232164	Float Assembly
66	05-52020	Elbow Tube

For complete Rotary Pump Repair Kit order: 225183-1

For complete 855-CC Rotary Pump & Air Separator order: 405952-51

3-741566

CONNECTION BOX ASSEMBLY

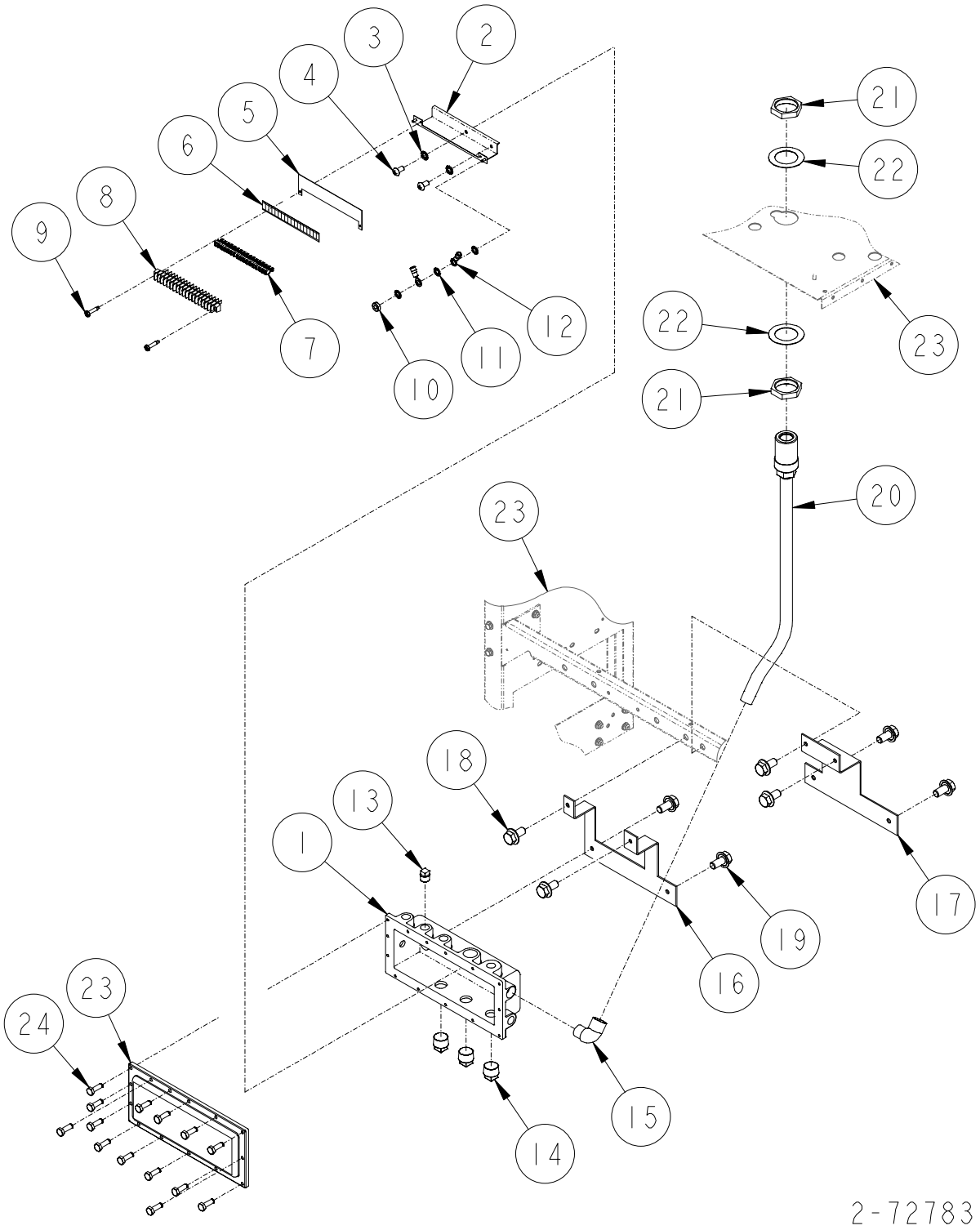

CONNECTION BOX ASSEMBLY

ITEM NO.	PART NO.	DESCRIPTION
1	1-422650	Connection Box
2	233671-1	Terminal Strip Bracket Assembly
3	05-50761	#10 Shakeproof Lockwasher
4	248-50021	#10-24 x 3/8" Long Phillips Round Head Machine Screw
5	1-233708	Insulator
6	1-233709	Label
7	6-224492	Connector (14-16 AWG)
8	3-227938	Terminal Strip
9	15-53292	#6-32 x 5/8" Long Phillips Pan Head Thread Cutting Screw
10	04-50211	#8-32 Hex Machine Nut
11	04-50761	#8 Shakeproof Lockwasher
12	1-224494	#8 Wire Terminal (14-16 AWG)
13	04-51911	1/2" Pipe Plug
14	06-51901	1" Pipe Plug
15	1-232329	90° Short Conduit Elbow
16	1-321134	Connection Box Mounting Bracket (H411C, H411C-B3/5, H413C, H413C-REB, H422C, H422C-B3/5, H426C, H426C-EB)
17	1-321104	Connection Box Mounting Bracket (H414C, H424C-B3/4, H428C, H428C-EB)
18	02-54752	5/16-18 x 5/8" Long M-F Flange Whiz-Lock Screw
19	62-50361	3/8-16 x 5/8" Long Hex Head Cap Screw
20	<u>Connection Box Conduit & Harness Assembly</u>	
	422652-5	All remote control models except H428C-REB
	422652-6	H428C-REB
	422652-7	All suction models except H428C-EB Suction
	422652-8	H428C-EB Suction
21	1-132706	1-1/2 Hex Lock Nut
22	1-132705	Conduit Washer
23	1-422651	Connection Box Cover
24	03-50361	1/4-20 x 3/4" Long Hex Head Cap Screw
25	<u>For parts call out of Chassis Assembly see:</u>	
	72779	H300C Series
	72724	H400C Series

<u>Reference for Tokheim internal use only:</u>
321153 45" Chassis Assembly
321204 30" Chassis Assembly

1-72783

CONNECTION BOX ASSEMBLY

30" SUCTION SYSTEM

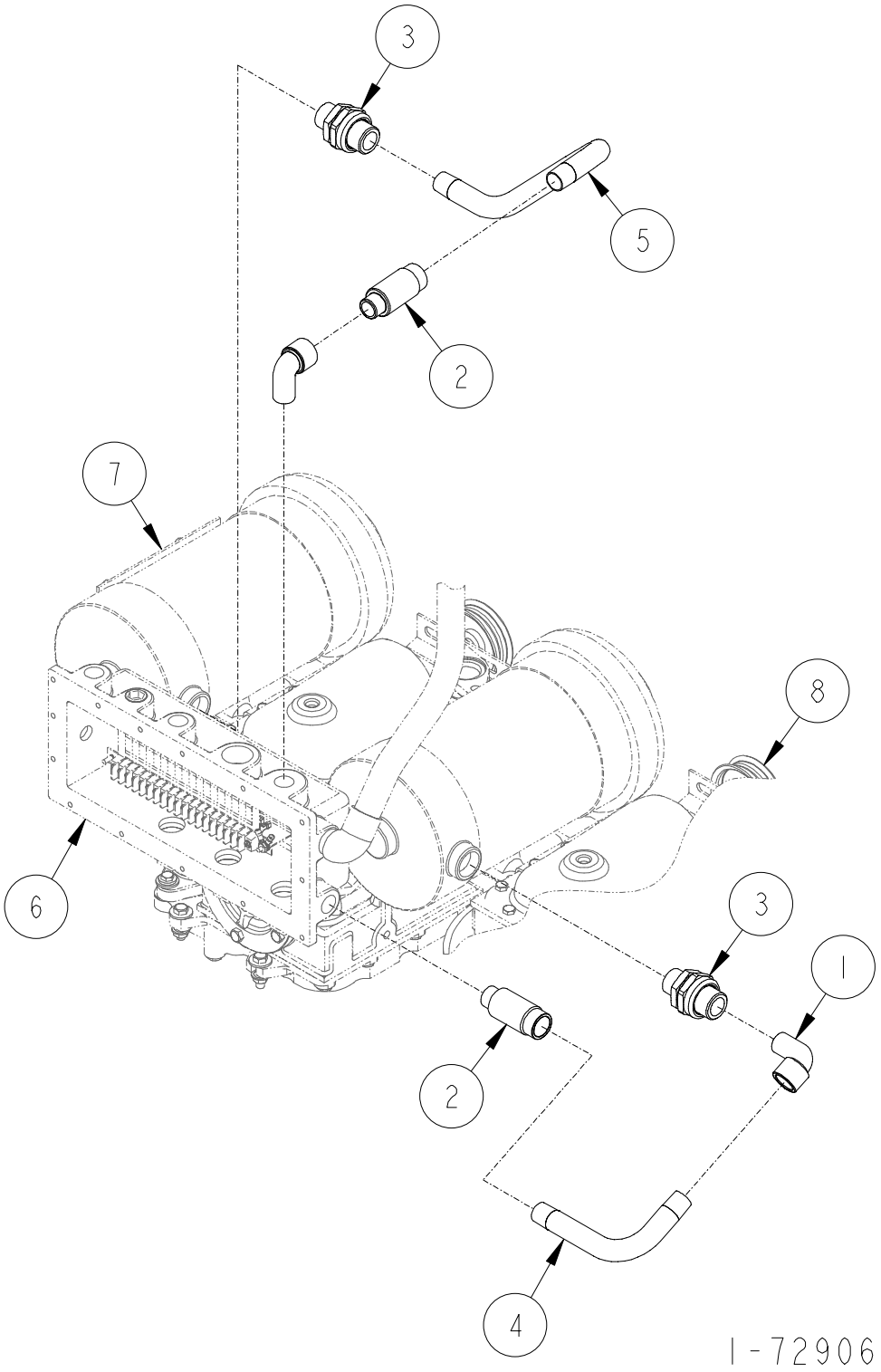

CONNECTION BOX ASSEMBLY

30" SUCTION SYSTEM

ITEM NO.	PART NO.	DESCRIPTION
1	1-128035	1/2 x 90° Conduit Street Elbow
2	1-218941	1/2 Expansion Union Male/Felmale
3	1-233735	1/2 Union Male/Female
4	2-321110	Motor Conduit
5	1-321288	Motor Conduit
6	For parts call out of Connection Box Assembly see 72783.	
7	For parts call out of Motor Assembly see 72894.	
8	For parts call out of Rotary Pump Assembly see 72896.	

Reference for Tokheim internal use only:

321204 30" Chassis Assembly

1-72906

CONNECTION BOX ASSEMBLY

H300C-RHV MASTER SERIES

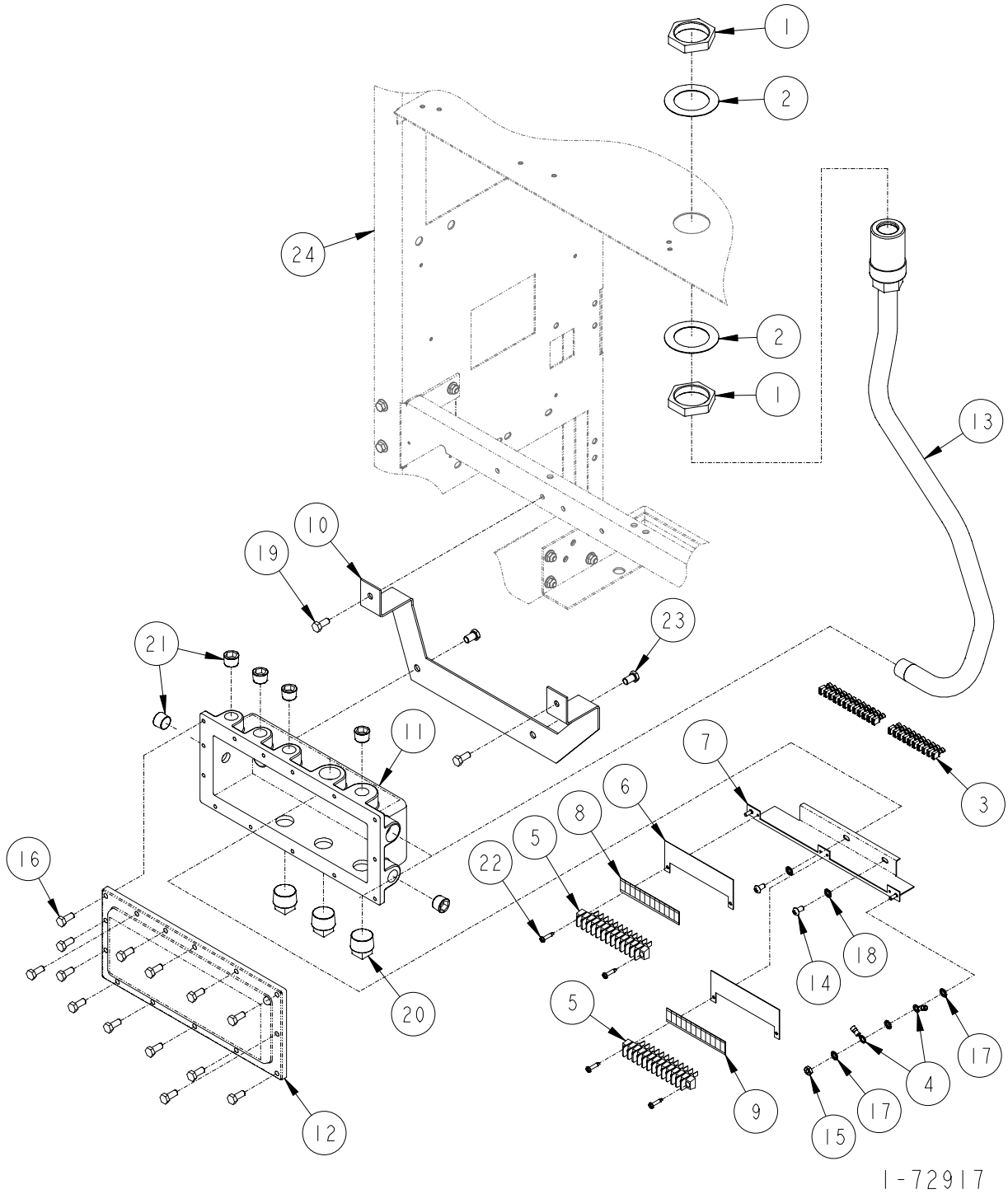

CONNECTION BOX ASSEMBLY
H300C-RHV MASTER SERIES

ITEM NO.	PART NO.	DESCRIPTION
1	1-132706	1-1/2 Hex Lock Nut
2	1-132735	Conduit Washer
3	6-224492	Connector (14-16 AWG)
4	1-224494	#8 Wire Terminal (14-16 AWG)
5	4-227938	Terminal Strip
6	2-233708	Insulator
7	233777-1	Terminal Strip Bracket Assembly
8	1-233785	Label
9	2-233785	Label
10	1-321402	Connection Box Mounting Bracket
11	1-422650	Connection Box
12	1-422651	Connection Box Cover
13	422907-4	Connection Box Conduit & Harness Assembly
14	248-50021	#10-24 x 3/8" Long Phillips Round Head Machine Screw
15	04-50211	#8-32 Hex Machine Nut
16	03-50361	1/4-20 x 3/4" Long Hex Head Cap Screw
17	04-50761	#8 Shakeproof Lockwasher
18	05-50761	#10 Shakeproof Lockwasher
19	20-51491	5/16-18 x 5/8" Long Self Tapping Screw
20	06-51901	1" Pipe Plug
21	54-51911	1/2" Pipe Plug
22	15-53292	#6-32 x 5/8" Long Phillips Pan Head Thread Cutting Screw
23	35-55132	5/16-18 x 5/8" Long M-F Flange Whiz-Lock Screw
24	For parts call out of Chassis Assembly see 72779.	

Reference for Tokheim internal use only:

321435 30" High Volume Chassis Assembly

1-72917

7
A

CONNECTION BOX ASSEMBLY

H300C-RHV SATELLITE SERIES

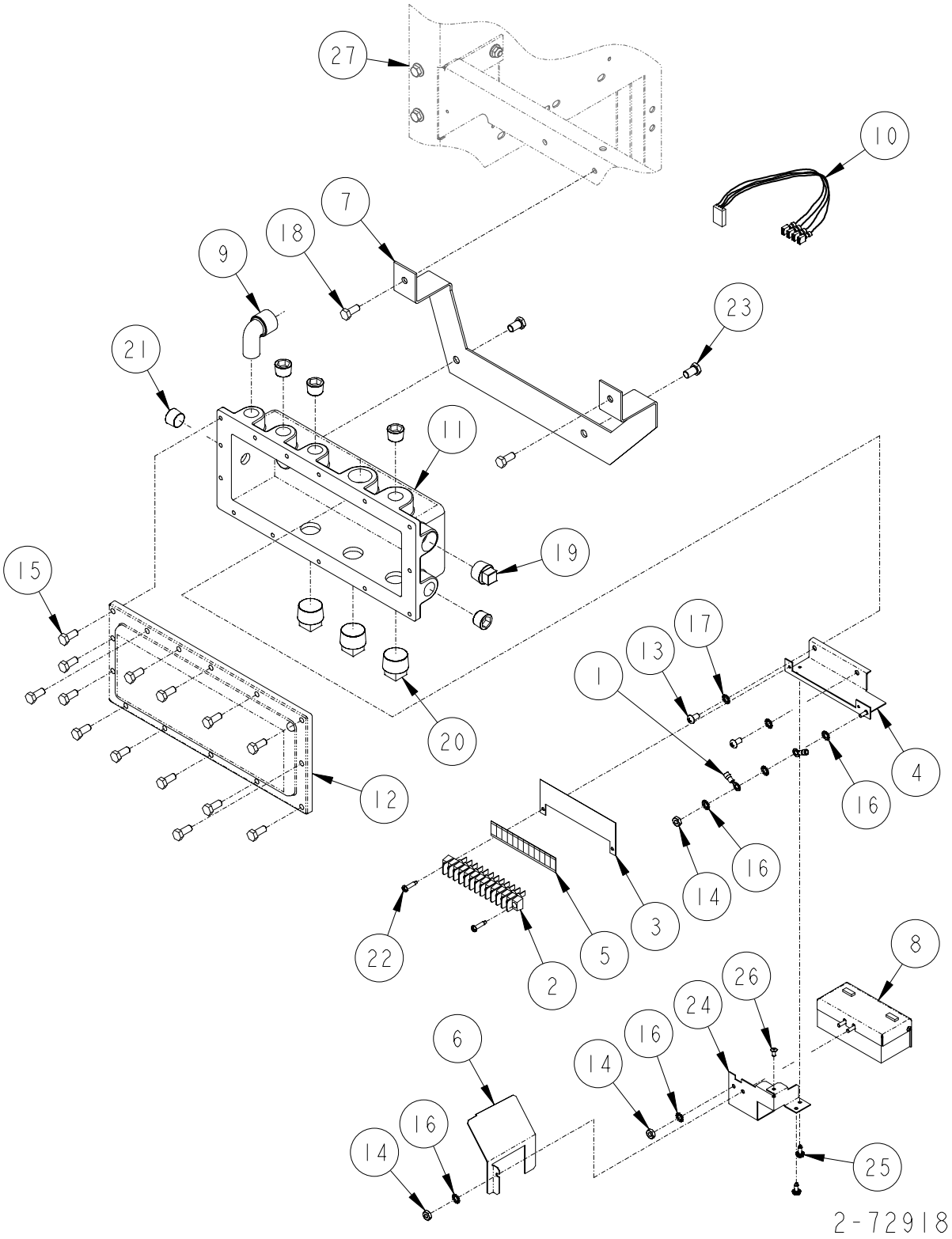

CONNECTION BOX ASSEMBLY
H300C-RHV SATELLITE SERIES

ITEM NO.	PART NO.	DESCRIPTION
1	1-224494	#8 Wire Terminal (14-16 AWG)
2	4-227938	Terminal Strip
3	2-233708	Insulator
4	233779-1	Terminal Strip Bracket Assembly
5	2-233785	Label
6	1-233798	ISB Box Divider
7	1-321402	Connection Box Mounting Bracket
8	321405-1	ISB Assembly
9	321433-1	IS Handle Harness Assembly
10	321434-1	Connection Box Handle Harness Assembly
11	1-422650	Connection Box
12	1-422651	Connection Box Cover
13	248-50021	#10-24 x 3/8" Long Phillips Round Head Machine Screw
14	04-50211	#8-32 Hex Machine Nut
15	03-50361	1/4-20 x 3/4" Long Hex Head Cap Screw
16	04-50761	#8 Shakeproof Lockwasher
17	05-50761	#10 Shakeproof Lockwasher
18	20-51491	5/16-18 x 5/8" Long Self Tapping Screw
19	05-51911	3/4" Pipe Plug
20	06-51901	1" Pipe Plug
21	54-51911	1/2" Pipe Plug
22	15-53292	#6-32 x 5/8" Long Phillips Pan Head Thread Cutting Screw
23	35-55132	5/16-18 x 5/8" Long M-F Flange Whiz-Lock Screw
24	1-321500	I.S. Support Bracket
25	21-55392	#6 x 3/8" Long Hex Head Self Tapping Screw
26	1-128281	Pop Rivet
27	For parts call out of Chassis Assembly see 72779.	

Reference for Tokheim internal use only:

321435 30" High Volume Chassis Assembly

2-72918

7
A

CONNECTION BOX ASSEMBLY

45" SUCTION SYSTEM

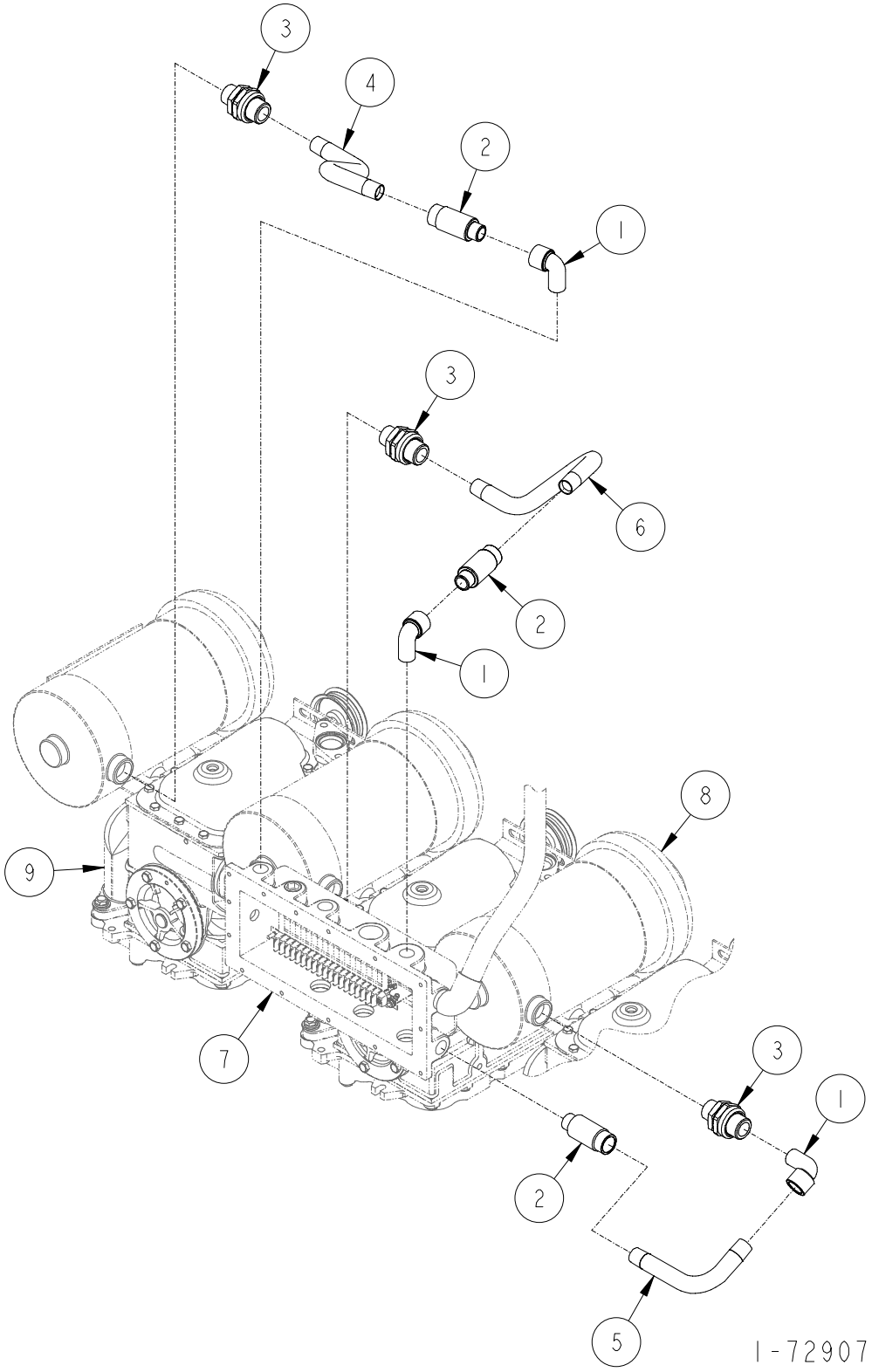

CONNECTION BOX ASSEMBLY

45" SUCTION SYSTEM

ITEM NO.	PART NO.	DESCRIPTION
1	1-128035	1/2 x 90° Conduit Street Elbow
2	1-218941	1/2 Expansion Union Male/Felmale
3	1-233735	1/2 Union Male/Female
4	1-321108	Motor Conduit
5	1-321110	Motor Conduit
6	1-321328	Motor Conduit
7	For parts call out of Connection Box Assembly see 72783.	
8	For parts call out of Motor Assembly see 72895.	
9	For parts call out of Rotary Pump Assembly see 72896.	

Reference for Tokheim internal use only:

321153 45" Chassis Assembly

1-72907

7
A

SECTION 6A

Premier “C” Dials

Page Number

Money/Volume Backlight Display Assembly 6A-2, 6A-3

Money/Volume Dial Assembly 6A-4, 6A-5

Money/Volume Panel Assembly
- No DPT & DPT 6A-6, 6A-7
- INSIGHT 6A-8

This page reserved for future use 6A-9

DPT Dial Assembly 6A-10, 6A-11

DPT TDS+ Dial Assembly 6A-12, 6A-13

Insight Dial Assembly 6A-14, 6A-15

Cash Acceptor Dial Assembly 6A-16, 6A-17

Printer & Card Reader Dial Assembly 6A-18, 6A-19

TDS & TDS Plus Insight Dial Assembly 6A-20, 6A-21

Printer Dial Assembly 6A-22, 6A-23

Bar Code Scan
- 45″ with or without Cash Acceptor 6A-24, 6A-25
- 30″ with Card Reader & Printer 6A-26, 6A-27

TI-RFID Dial Assembly 6A-28, 6A-29

Access Dial Assembly (Left Side) With or Without Pump Stop 6A-30, 6A-31

Dial Blank Assembly (Center & Right Side) 6A-32, 6A-33

Money/Volume Panel Assembly Color Chart 6A-34

MONEY/VOLUME BACKLIGHT DISPLAY ASSEMBLY

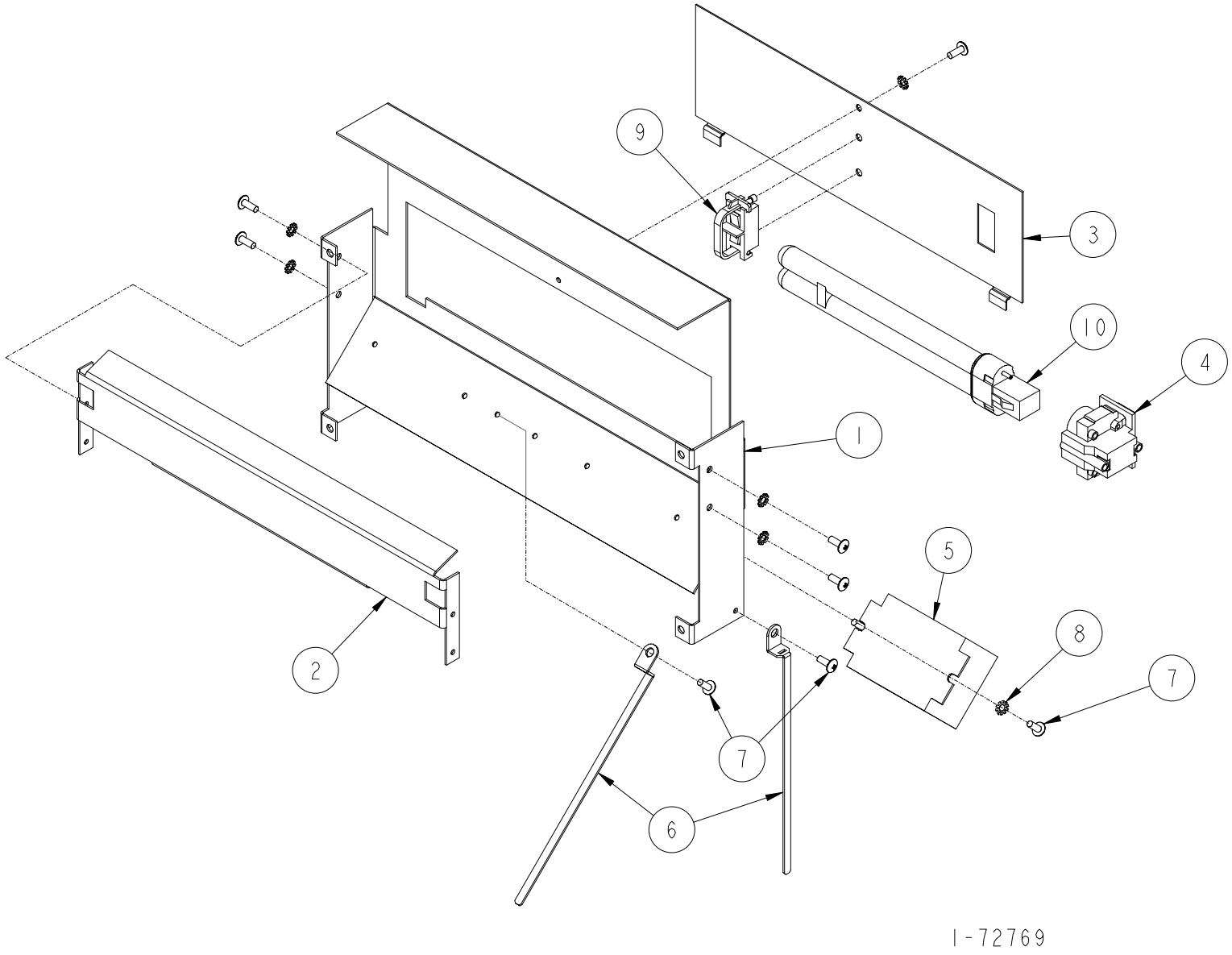

MONEY/VOLUME BACKLIGHT DISPLAY ASSEMBLY

ITEM NO.	PART NO.	DESCRIPTION
1	1-321117	Money/Volume Reflector
2	1-233667	Backlight Shield
3	1-233668	Lamp Bracket
4	2-232121	Lampholder
5	Ballast & Harness Assembly	
	422778-1	120 Volt 60hz
	422778-2	240 Volt 50hz
	422778-3	240 Volt 60hz
6	3-228918	Cable Clamp
7	2-230689	#6 x 3/8" Long Phillips Truss Head Self Tapping Screw
8	03-50762	#6 Shakeproof Lockwasher
9	2-232121	Lampholder Support
10	4-232122	Light
	For complete Monry/Volume Backlight Assembly order:	
	422663-1	120 Volt 60hz
	422663-2	240 Volt 50hz
	422663-3	240 Volt 60hz

1-72769

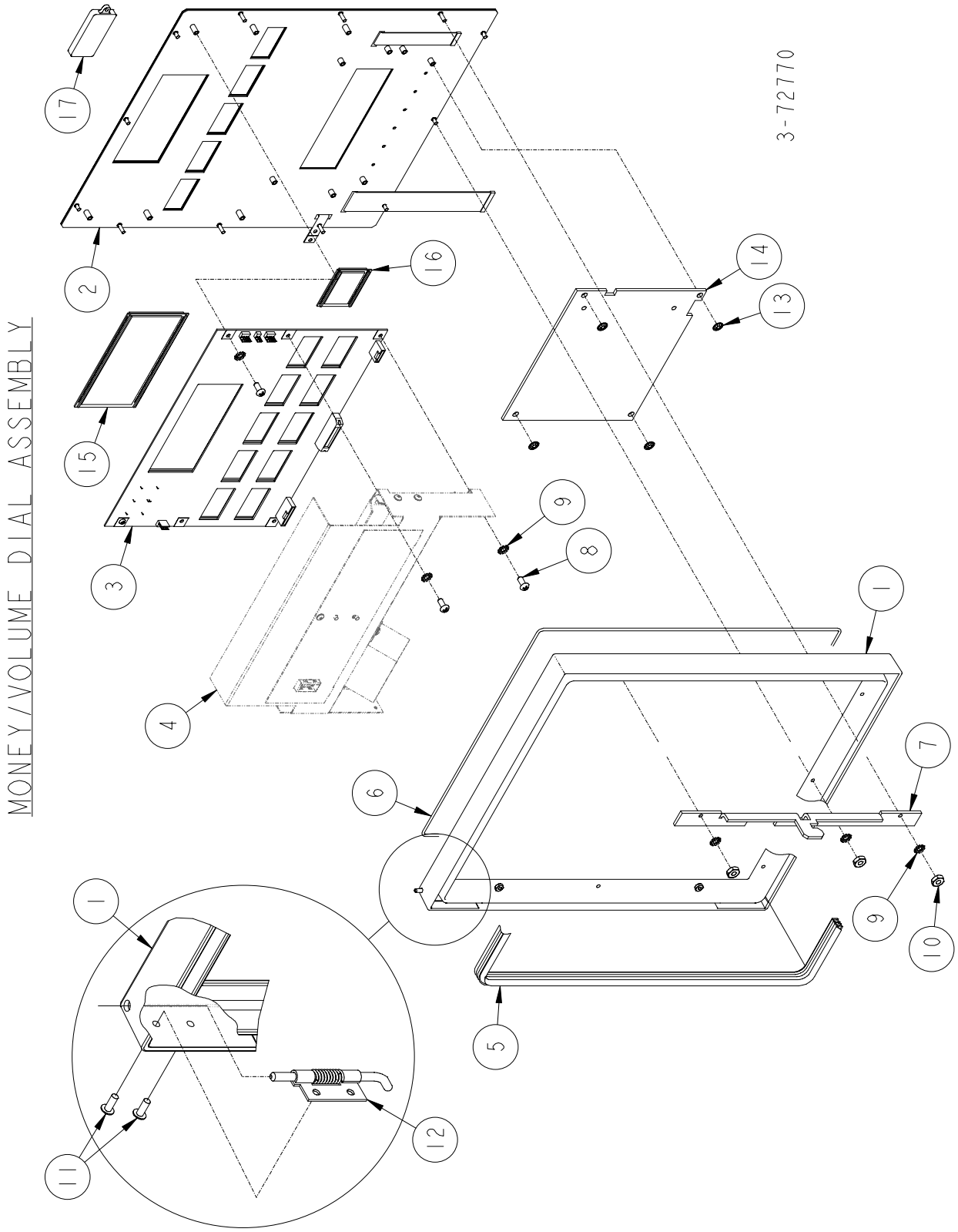
MONEY/VOLUME DIAL ASSEMBLY
3-72770
1
2
3
4
5
6
7
8
9
10
11
12
13
14
15
16
17

MONEY/VOLUME DIAL ASSEMBLY

ITEM NO.	PART NO.	DESCRIPTION
1	1-233862	Door Frame
2	For Money/Volume Panel Assembly see	
	72781	Insight
	72782	No DPT & DPT
3	Display Assembly	
	1-422594	3 Product Decimal Cash
	2-422594	3 Product Decimal Cash/Credit
	3-422594	4 Product Decimal Cash
	4-422594	4 Product Decimal Cash/Credit
	5-422594	2 Product Decimal Cash
	6-422594	2 Product Decimal Cash/Credit
	7-422594	1 Product Decimal Cash
	8-422594	1 Product Decimal Cash/Credit
	9-422594	5 Product Decimal Cash
	10-422594	5 Product Decimal Cash/Credit
	11-422594	3 Product Decimal Cash
	12-422594	3 Product Decimal Cash/Credit
	13-422594	3 Product Comma Cash
	14-422594	3 Product Comma Cash/Credit
3	Display Assembly (Continued)	
	15-422594	4 Product Comma Cash
	16-422594	4 Product Comma Cash/Credit
	17-422594	2 Product Comma Cash
	18-422594	2 Product Comma Cash/Credit
	19-422594	1 Product Comma Cash
	20-422594	1 Product Comma Cash/Credit
	21-422594	5 Product Comma Cash
	22-422594	5 Product Comma Cash/Credit
4	For parts call out of Money/Volume Backlight Display see 72769	
5	1-233681	Dial Seal
6	1-233680	Dial Plate Seal
7	1-321099	Dial Latch
8	90-50021	#6-32 x 5/16" Long Phillips Round Head Screw
9	03-50762	#6 Shakeproof Lockwasher
10	03-50212	#6-32 Hex Machine Nut
11	1-128281	Pop Rivet
12	4180002	Hinge Pin Assembly
13	2-232258	Pushnut Fastener
14	1-233679	Graphics Display Window
15	Money/Volume Liquid Crystal Display	
	1-422619	Decimal
	3-422619	Comma
16	Product Liquid Crystal Display	
	2-422619	Decimal
	4-422619	Comma
17	Key	
	1-132719	Managers
	2-132719	Attendents

Reference for Tokheim internal use only
422668 Money/Volume Dial Assembly

3-72770

MONEY/VOLUME PANEL ASSEMBLY
(NO DPT & DPT)

PC. NO.	CUT-OUT LOCATION (X = CUT-OUT)										X = EMBOSSED	4 X 20 DISPLAY
	A	B	C	D	E	F	G	H	I	J		
13-422723	X		X		X						X	X
14-422723	X		X		X	X		X		X	X	X
15-422723	X	X	X	X							X	X
16-422723	X	X	X	X		X	X	X	X		X	X
17-422723	X				X						X	X
18-422723	X				X	X				X	X	X
19-422723			X								X	X
20-422723			X					X			X	X
21-422723	X	X	X	X	X						X	X
22-422723	X	X	X	X	X	X	X	X	X	X	X	X
23-422723		X	X	X							X	X
24-422723		X	X	X			X	X	X		X	X
25-422723	X		X		X						X	
26-422723	X		X		X	X		X		X	X	
27-422723	X	X	X	X							X	
28-422723	X	X	X	X		X	X	X	X		X	
29-422723	X				X						X	
30-422723	X				X	X				X	X	
31-422723				X							X	
32-422723				X				X			X	
33-422723	X	X	X	X	X						X	
34-422723	X	X	X	X	X	X	X	X	X	X	X	
35-422723		X	X	X							X	
36-422723		X	X	X			X	X	X		X	
49-422723	X		X		X							X
50-422723	X		X		X	X		X		X		X
51-422723	X	X	X	X								X
52-422723	X	X	X	X		X	X	X	X			X
53-422723	X				X							X
54-422723	X				X	X				X		X

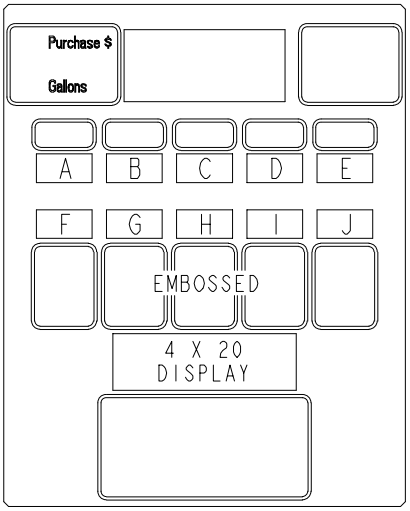

2-72782a

See Color Chart
72823

MONEY/VOLUME PANEL ASSEMBLY
(NO DPT & DPT)

PC. NO.	CUT-OUT LOCATION (X = CUT-OUT)										X = EMBOSSED	4 X 20 DISPLAY
	A	B	C	D	E	F	G	H	I	J		
55-422723			X									X
56-422723			X					X				X
57-422723	X	X	X	X	X							X
58-422723	X	X	X	X	X	X	X	X	X	X		X
59-422723		X	X	X								X
60-422723		X	X	X			X	X	X			X
61-422723	X		X		X							
62-422723	X		X		X	X		X		X		
63-422723	X	X	X	X								
64-422723	X	X	X	X		X	X	X	X			
65-422723	X				X							
66-422723	X				X	X				X		
67-422723				X								
68-422723				X				X				
69-422723	X	X	X	X	X							
70-422723	X	X	X	X	X	X	X	X	X	X		
71-422723		X	X	X								
72-422723		X	X	X			X	X	X			
73-422723	X		X		X						X	X
74-422723	X				X						X	X
75-422723			X								X	X
76-422723												

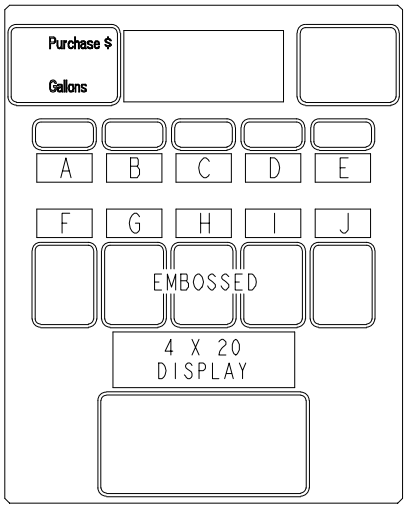

2-72782b

See Color Chart
72823

6
A

MONEY/VOLUME PANEL ASSEMBLY
(INSIGHT)

PC. NO.	CUT-OUT LOCATION (X = CUT-OUT)										X = EMBOSSED
	A	B	C	D	E	F	G	H	I	J	
1-422723	X		X		X						X
2-422723	X		X		X	X		X		X	X
3-422723	X	X	X	X							X
4-422723	X	X	X	X		X	X	X	X		X
5-422723	X				X						X
6-422723	X				X	X				X	X
7-422723			X								X
8-422723			X					X			X
9-422723	X	X	X	X	X						X
10-422723	X	X	X	X	X	X	X	X	X	X	X
11-422723		X	X	X							X
12-422723		X	X	X			X	X	X		X
37-422723	X		X		X						
38-422723	X		X		X	X		X		X	
39-422723	X	X	X	X							
40-422723	X	X	X	X		X	X	X	X		
41-422723	X				X						
42-422723	X				X	X				X	
43-422723				X							
44-422723				X				X			
45-422723	X	X	X	X	X						
46-422723	X	X	X	X	X	X	X	X	X	X	
47-422723		X	X	X							
48-422723		X	X	X			X	X	X		

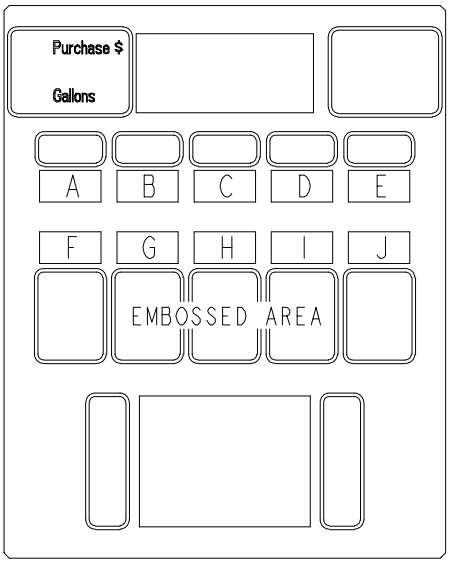

1-72781

See Color Chart
72823

This page reserved for future use.

DPT DIAL ASSEMBLY

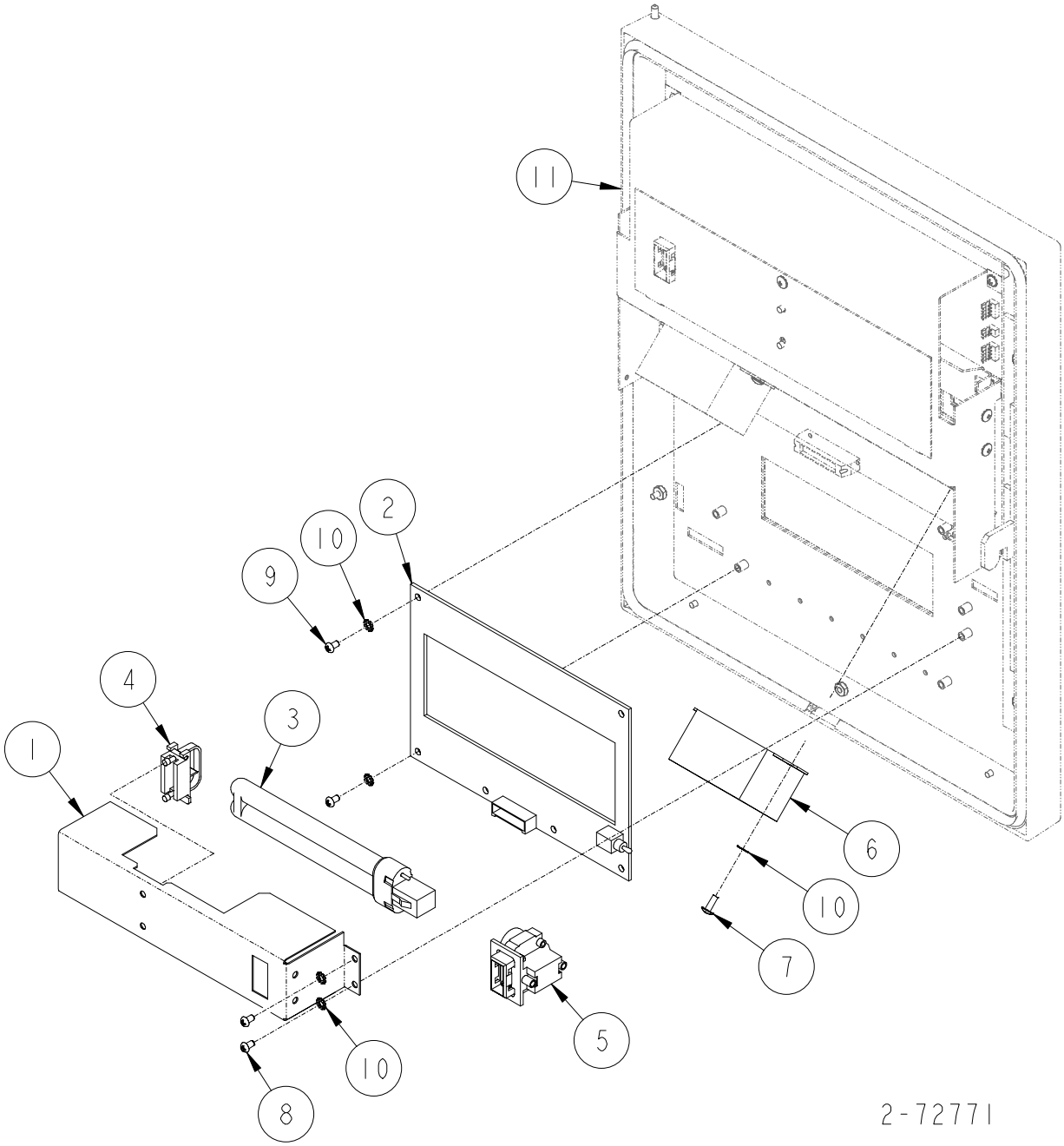

DPT DIAL ASSEMBLY

ITEM NO.	PART NO.	DESCRIPTION
1	1-321178	Reflector
2	DPT Display	
	1-421076	Domestic without cable
	2-421076	Domestic with cable
	3-421076	Hebrew
3	2-232122	Light
4	1-232120	Lampholder Support
5	1-232121	Lampholder
6	Ballast & Harness Assembly	
	422778-7	120 Volt 60hz
	422778-8	240 Volt 50hz
	422778-9	240 Volt 60hz
7	2-230689	#6 x 3/8" Long Phillips Truss Head Self Tapping Screw
8	88-50021	#6-32 x 1/4" Long Phillips Round Head Screw
9	90-50021	#6-32 x 5/16" Long Phillips Round Head Screw
10	03-50762	#6 Shakeproof Lockwasher
11	For parts call out of Money/Volume Dial Assembly see 72770.	
	Reference for Tokheim internal use only	
	422668	Money/Volume Dial Assembly

2-72771

6
A

DPT TDS+ DIAL ASSEMBLY

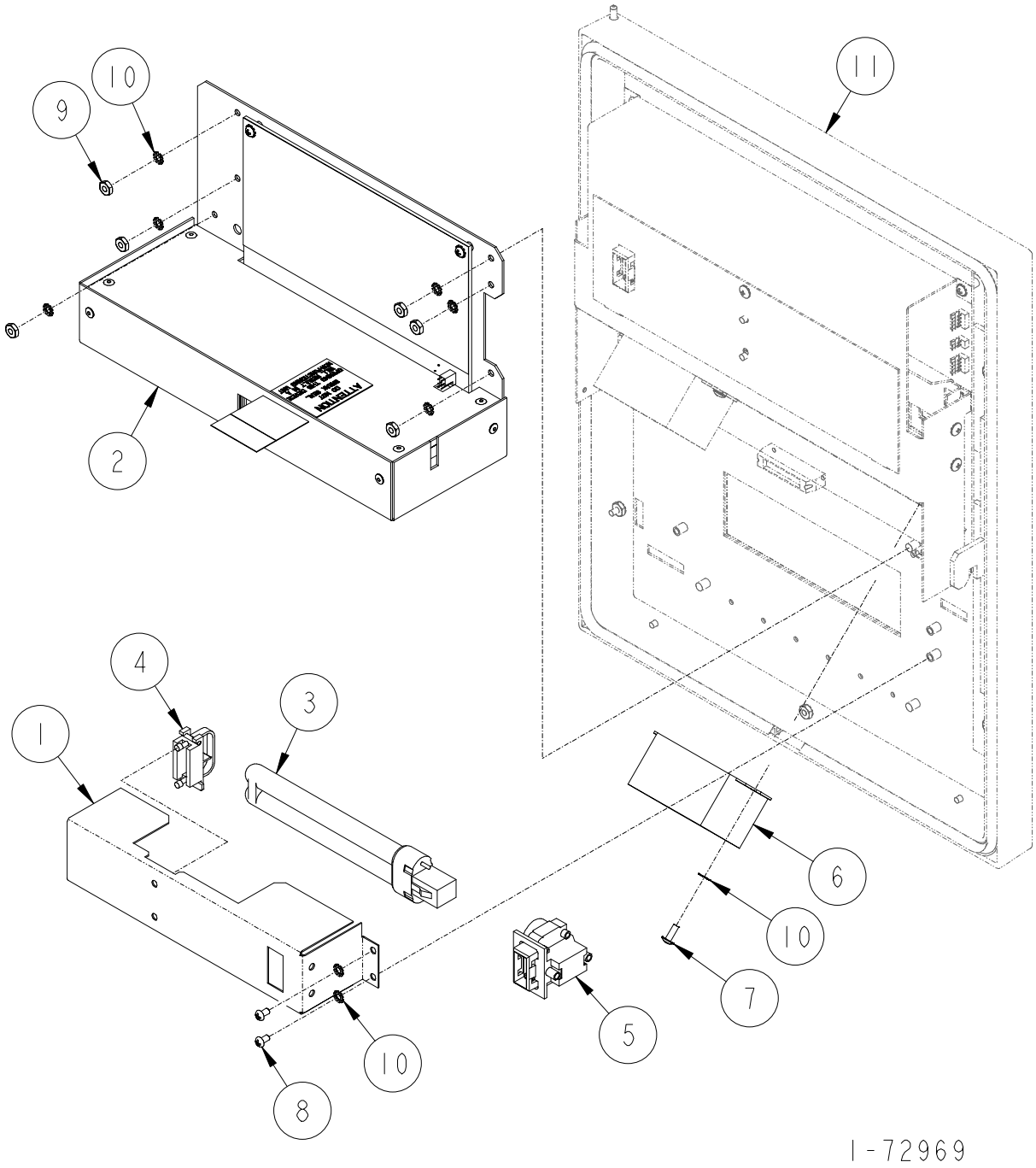

DPT TDS+ DIAL ASSEMBLY

ITEM NO.	PART NO.	DESCRIPTION
1	1-321178	Reflector
2	423350-1	TDS+ Display Module
3	2-232122	Light
4	1-232120	Lampholder Support
5	1-232121	Lampholder
6	Ballast & Harness Assembly	
	422778-7	120 Volt 60hz
	422778-8	240 Volt 50hz
	422778-9	240 Volt 60hz
7	2-230689	#6 x 3/8" Long Phillips Truss Head Self Tapping Screw
8	88-50021	#6-32 x 1/4" Long Phillips Round Head Screw
9	03-50212	#6-32 Hex Machine Nut
10	03-50762	#6 Shakeproof Lockwasher
11	For parts call out of Money/Volume Dial Assembly see 72770.	
	Reference for Tokheim internal use only	
	422668	Money/Volume Dial Assembly

1-72969

6
A

INSIGHT DIAL ASSEMBLY

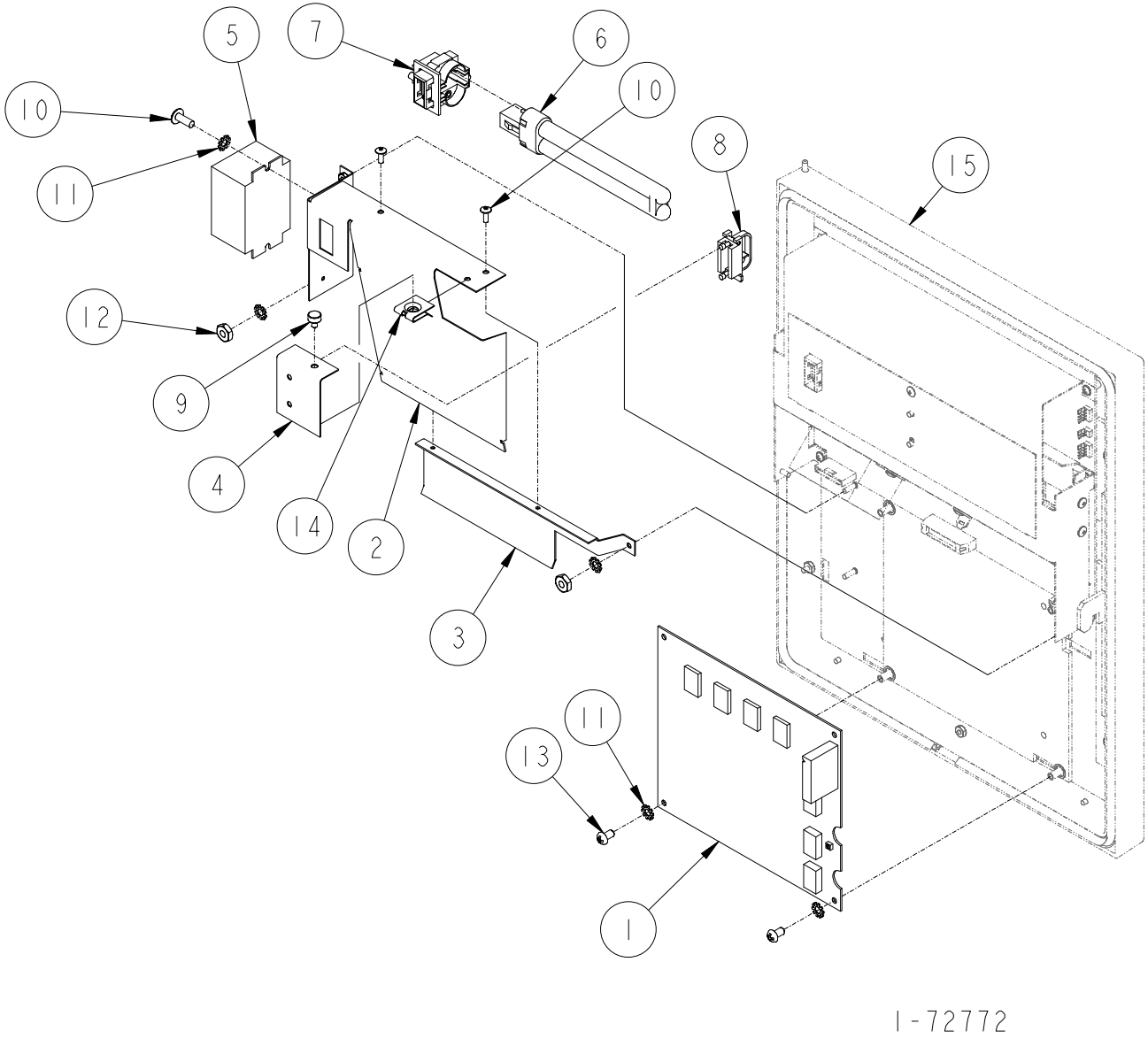

INSIGHT DIAL ASSEMBLY

ITEM NO.	PART NO.	DESCRIPTION
1	1-422448	Graphic DPT Display
2	1-422661	Backlight Lampholder/Reflector
3	1-321107	Backlight Support Bracket
4	1-132849	Backlight Access Bracket
5	Ballast & Harness Assembly	
	422778-7	120 Volt 60hz
	422778-8	240 Volt 50hz
	422778-9	240 Volt 60hz
6	2-232122	Light
7	1-232121	Lampholder
8	1-232120	Lampholder Support
9	1-131110	Thumb Screw
10	2-230689	#6 x 3/8" Long Phillips Truss Head Self Tapping Screw
11	03-50762	#6 Shakeproof Lockwasher
12	03-50212	#6-32 Hex Machine Nut
13	88-50021	#6-32 x 1/4" Long Phillips Round Head Screw
14	4-130449	U-Nut
15	For parts call out of Money/Volume Dial Assembly see 72770.	
	Reference for Tokheim internal use only	
	422668	Monry/Volume Dial Assembly

1-72772

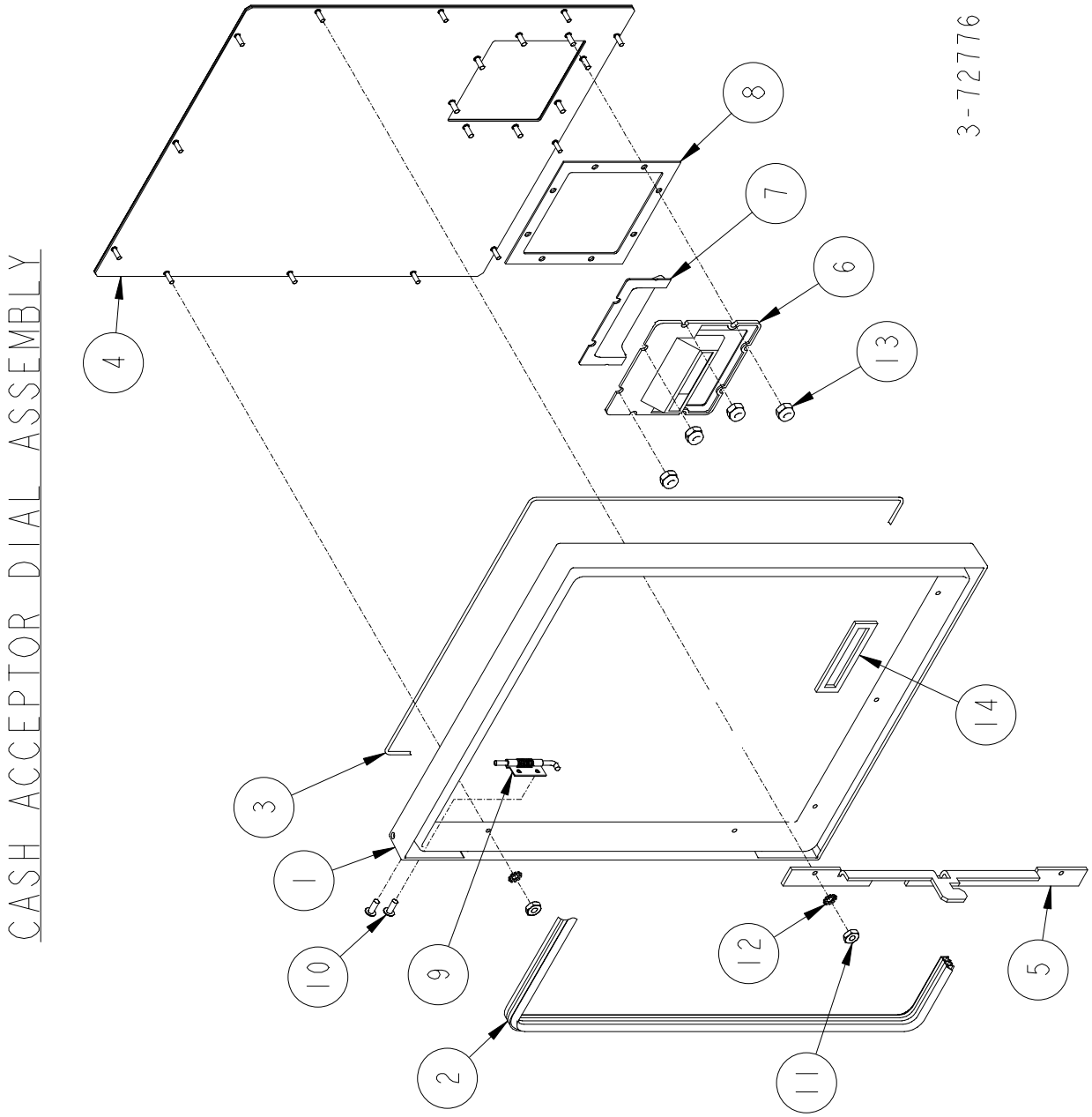
CASH ACCEPTOR DIAL ASSEMBLY
3-72776
1
2
3
4
5
6
7
8
9
10
11
12
13
14

CASH ACCEPTOR DIAL ASSEMBLY

ITEM NO.	PART NO.	DESCRIPTION
1	1-233862	Door Frame
2	1-233681	Dial Seal
3	1-233680	Dial Plate Seal
4	3-422755	Door Panel
5	1-321099	Dial Latch
6	1-421110	Cash Acceptor Bezel
7	1-319449	Cash Acceptor Shield
8	1-233730	Cash Acceptor Cushion
9	4180002	Door Hinge Assembly
10	1-128281	Pop Rivet
11	03-50211	#6-32 Hex Machine Nut
12	03-50762	#6 Shakeproof Lockwasher
13	04-55531	#8-32 Nylon Insert Lock Nut
14	1-233573	Cash Acceptor Cushion

For complete Access Dial Assembly order: 321115-3

3-72776

PRINTER & CARD READER DIAL ASSEMBLY

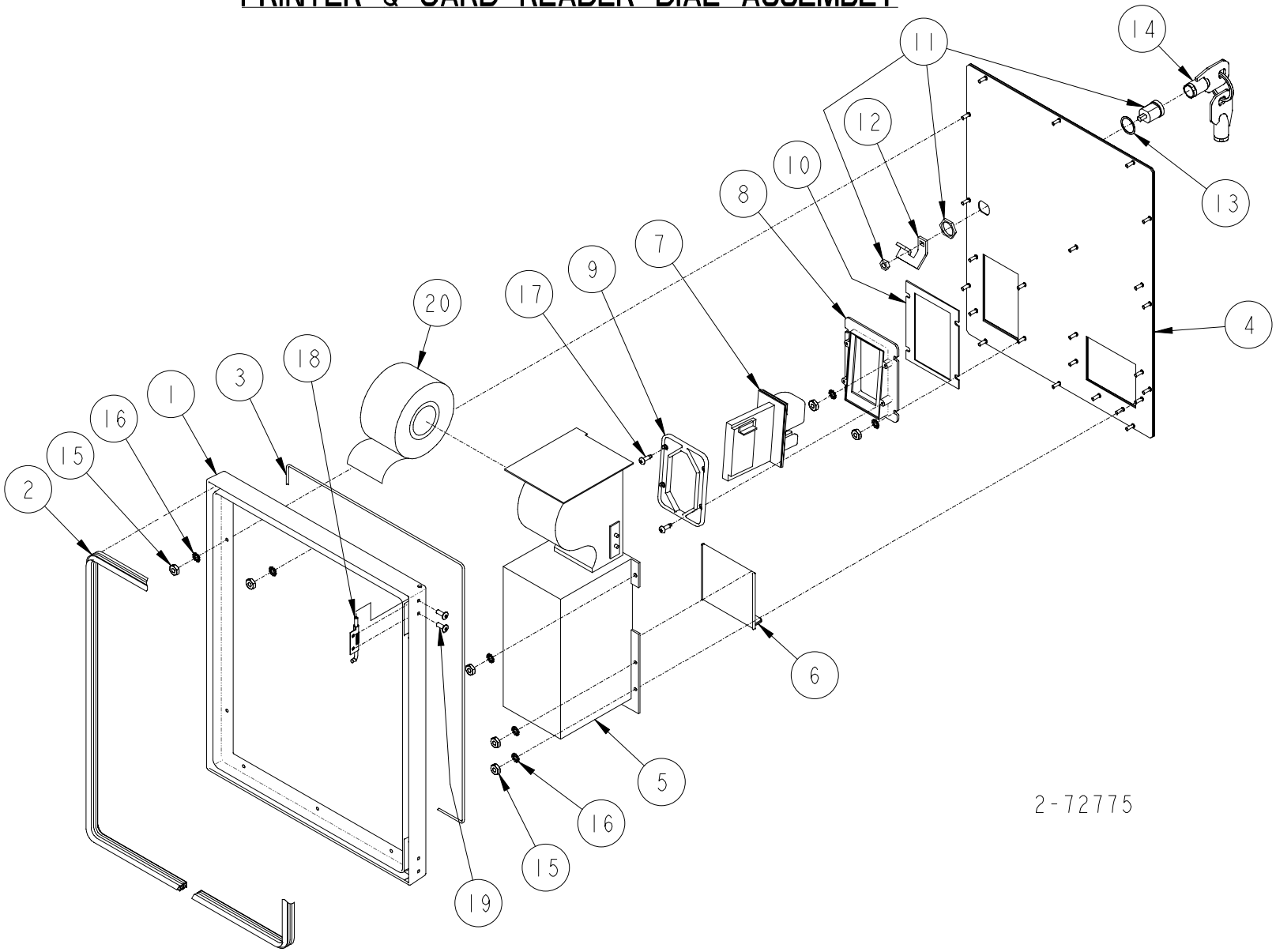

PRINTER & CARD READER DIAL ASSEMBLY

ITEM NO.	PART NO.	DESCRIPTION
1	1-233862	Door Frame
2	1-233681	Dial Seal
3	1-233680	Dial Plate Seal
4	2-422755	Door Panel
5	1-321147	Seiko Printer
6	51-01448-00	Receipt Door
7	1-321119	Cardreader
8	1-321150	Card Reader Bezel
9	1-233683	Card Reader Clamp
10	1-233687	Cushion
11	1-231841	Waterproof Lock
12	1-233673	Lock Cam
13	2-127656	Lock Gasket
14	2-231841	Tubular Key (TPX 88)
15	03-50211	#6-32 Hex Machine Nut
16	03-50762	#6 Shakeproof Lockwasher
17	1-232848	Phillips Pan Head Self Tapping Screw
18	4180003	Door Hinge Assembly
19	1-128281	Pop Rivet
20	1-233712	Paper Roll

For complete Access Dial Assembly order: 321115-2

1-72775

TDS INSIGHT DIAL ASSEMBLY

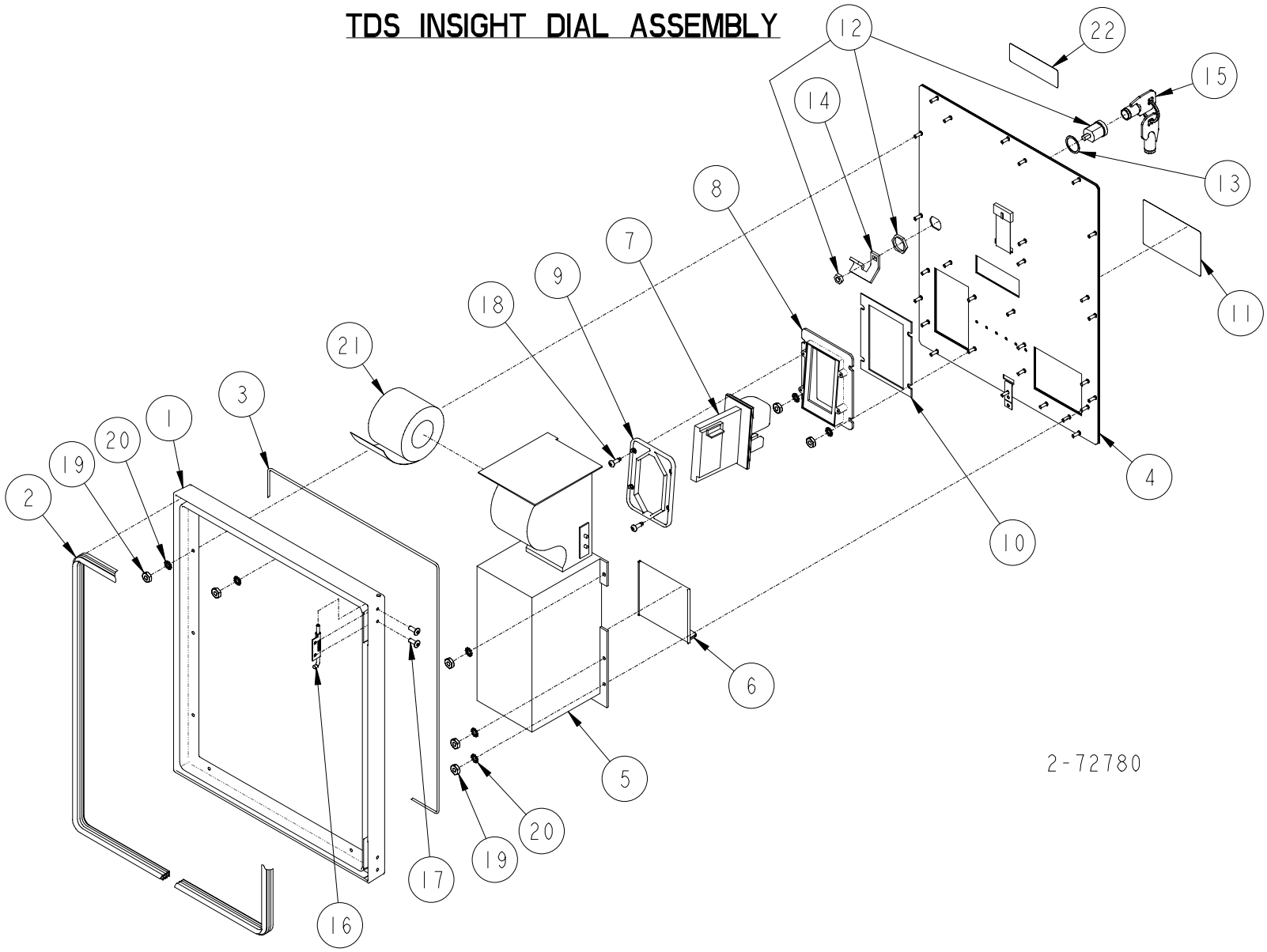

TDS INSIGHT DIAL ASSEMBLY

ITEM NO.	PART NO.	DESCRIPTION
1	1-233862	Door Frame
2	1-233681	Dial Seal
3	1-233680	Dial Plate Seal
4	Door Panel	
	5-422755	TDS Insight
	6-422755	Insight
	321224-2	Debit (Mobil)
5	Seiko Printer	
	3-321147	Hebrew
	5-321147	All models except Hebrew
6	51-01448-00	Receipt Door
7	1-321119	Cardreader
8	1-321150	Card Reader Bezel
9	1-233683	Card Reader Clamp
10	1-233687	Cushion
11	Debit Keypad Overlay (Customer Specific)	
	1-233689	TDS Insight (Left Side)
	1-233690	TDS Plus Insight (Left Side)
12	1-231841	Waterproof Lock
13	2-127656	Lock Gasket
14	1-233673	Lock Cam
15	2-231841	Tubular Key (TPX 88)
16	4180003	Door Hinge Assembly
17	1-128281	Pop Rivet
18	1-232848	Phillips Pan Head Self Tapping Screw
19	03-50211	#6-32 Hex Machine Nut
20	03-50762	#6 Shakeproof Lockwasher
21	7-230492	Paper Roll
22	2-232704	Decalcomania

For complete Access Dial Assembly order:

321115-5	TDS Plus Insight (Left Side)
321115-6	TDS Insight (Left Side)
321115-8	Card Reader/Printer Insight (Left Side)
321115-11	Standard DPT With or Without TDS TDS Plus (Left Side)

2-72780

PRINTER DIAL ASSEMBLY

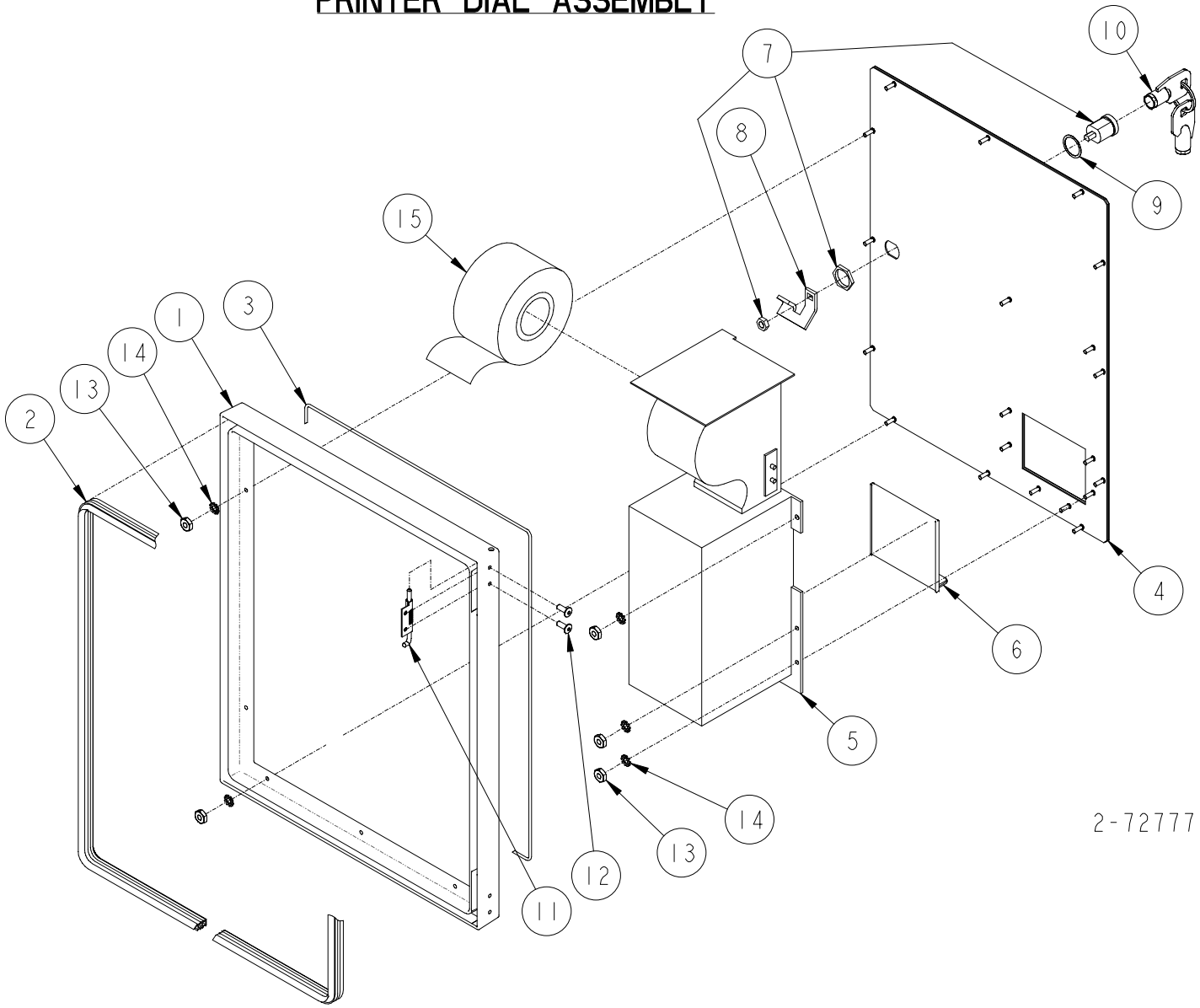

PRINTER DIAL ASSEMBLY

ITEM NO.	PART NO.	DESCRIPTION
1	1-233862	Door Frame
2	1-233681	Dial Seal
3	1-233680	Dial Plate Seal
4	7-422755	Door Panel
5	1-321147	Seiko Printer
6	51-01448-00	Receipt Door
7	1-231841	Waterproof Lock
8	1-233673	Lock Cam
9	2-127656	Lock Gasket
10	2-231841	Tubular Key (TPX 88)
11	4180003	Door Hinge Assembly
12	1-128281	Pop Rivet
13	03-50211	#6-32 Hex Machine Nut
14	03-50762	#6 Shakeproof Lockwasher
15	1-233712	Paper Roll

For complete Printer Dial Assembly order 321115-7

2-72777

45" BAR CODE SCANNER DIAL ASSEMBLY

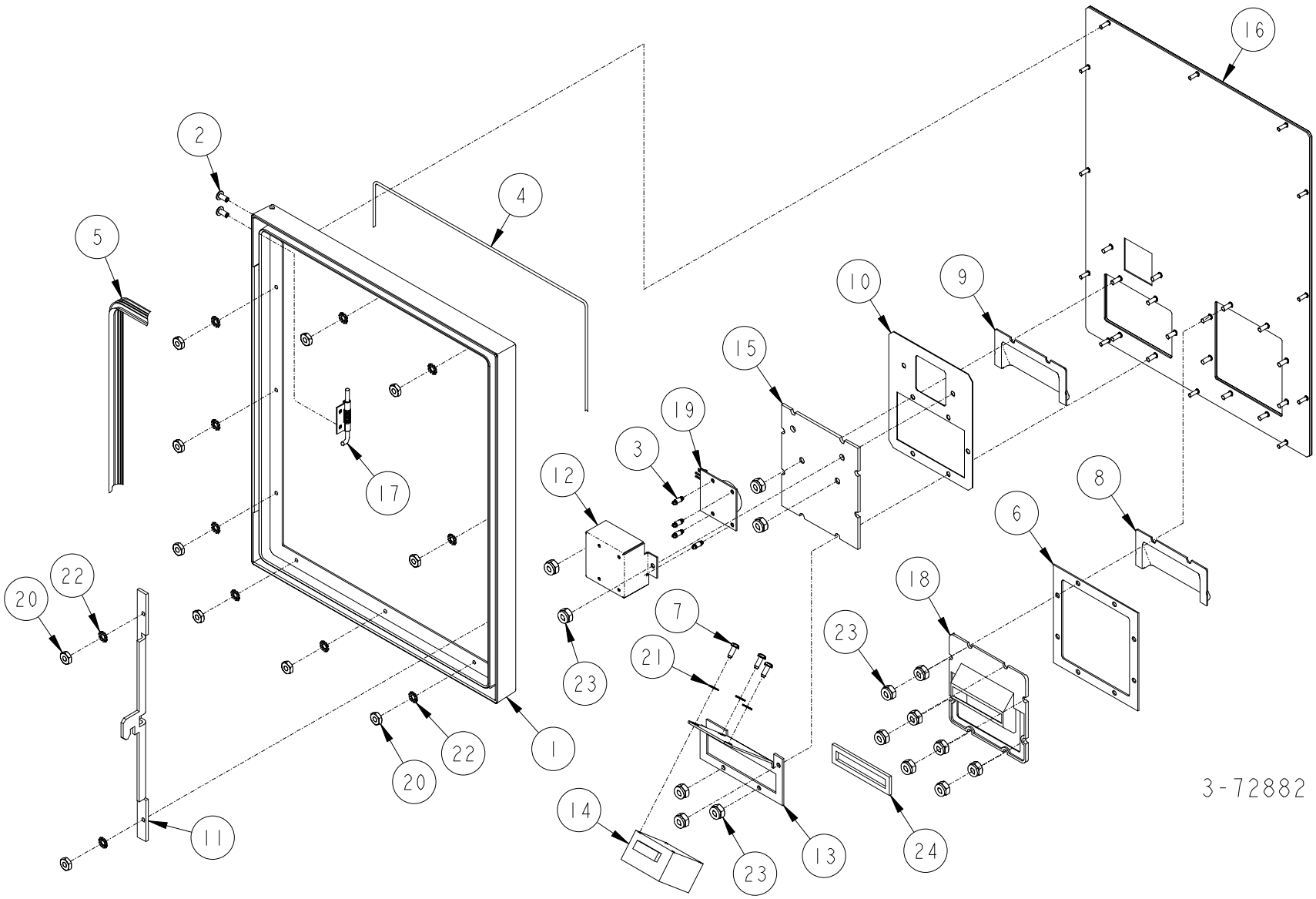

45" BAR CODE SCANNER DIAL ASSEMBLY

ITEM NO.	PART NO.	DESCRIPTION
1	1-233862	Door Frame
2	1-128281	Pop Rivet
3	6-225470	Standoff
4	1-233680	Dial Plate Seal
5	1-233681	Dial Seal
6	1-233730	Cash Acceptor Cushion
7	1-233760	Metric Screw
8	1-319449	Cash Acceptor Shield "Clear"
9	2-319449	Cash Acceptor Shield "Black"
10	4-320484	Cushion
11	1-321099	Dial Latch
12	1-321355	LED Box
13	1-321357	Scanner Bracket
14	1-321359	LS 1220 Scan Module
15	1-321361	Display Window
16	Door Panel	
	8-422755	Without Cash Acceptor
	9-422755	With Cash Acceptor
17	4180002	Door Hinge Assembly
18	1-421110	Cash Acceptor Bezel
19	422911-1	LED Board Assembly
20	03-50211	#6-32 Hex Machine Nut
21	01-50761	#4 Shakeproof Lockwasher
22	03-50762	#6 Shakeproof Lockwasher
23	04-55531	#8-32 Nylon Insert Lock Nut
24	1-233573	Cash Acceptor Cushion

For complete Access Dial Assembly order:

321115-9	Standard DPT without Cash Acceptor (Right Side)
321115-10	Standard DPT with Cash Acceptor (Rigth Side)
321115-14	Without Cash Acceptor (Right Side)

3-72882

30" BAR CODE SCANNER DIAL ASSEMBLY
(WITH CARD READER & PRINTER)

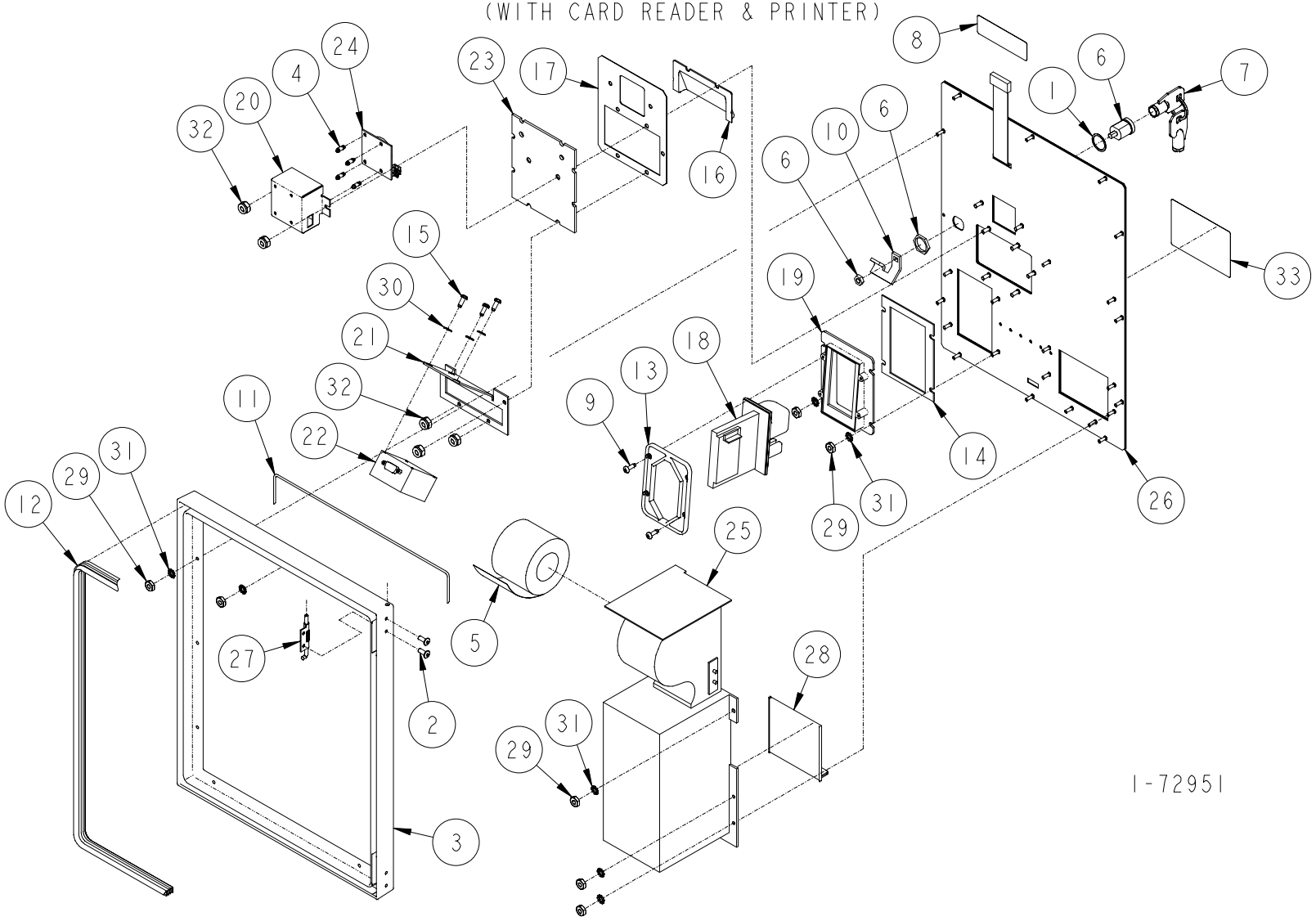

30" BAR CODE SCANNER DIAL ASSEMBLY
(WITH CARD READER & PRINTER)

ITEM NO.	PART NO.	DESCRIPTION
1	2-127656	Lock Gasket
2	1-128281	Pop Rivet
3	1-233862	Door Frame
4	6-225470	Standoff
5	6-230492	Paper Roll
6	1-231841	Waterproof Lock
7	2-231841	Tubular Key (TPX 88)
8	2-232704	Decalcomania
9	1-232848	Phillips Pan Head Self Tapping Screw
10	1-233673	Lock Cam
11	1-233680	Dial Plate Seal
12	1-233681	Dial Seal
13	1-233683	Card Reader Clamp
14	1-233687	Cushion
15	1-233760	Metric Screw
16	2-319449	Cash Acceptor Shield "Black"
17	4-320484	Cushion
18	1-321119	Cardreader
19	1-321150	Card Reader Bezel
20	1-321355	LED Box
21	1-321357	Scanner Bracket
22	1-321359	LS 1220 Scan Module
23	1-321361	Display Window
24	422911-1	LED Board Assembly
25	<u>Seiko Printer</u>	
	1-321147	Standard DPT
	5-321147	INSIGHT
26	<u>Door Panel</u>	
	10-422755	Standard DPT
	11-422755	INSIGHT
27	4180003	Door Hinge Assembly
28	51-01448-00	Receipt Door
29	03-50211	#6-32 Hex Machine Nut
30	01-50761	#4 Shakeproof Lockwasher
31	03-50762	#6 Shakeproof Lockwasher
32	04-55531	#8-32 Nylon Insert Lock Nut
33	<u>Debit Keypad Overlay (Customer Specific)</u>	
	1-233689	TDS Insight (Left Side)
	1-233690	TDS Plus Insight (Left Side)
	<u>For complete Access Dial Assembly order:</u>	
	321115-12	Standard DPT with Card Reader & Printer
	321115-13	INSIGHT with Card Reader & Printer

1-72951

TI-RFID DIAL ASSEMBLY

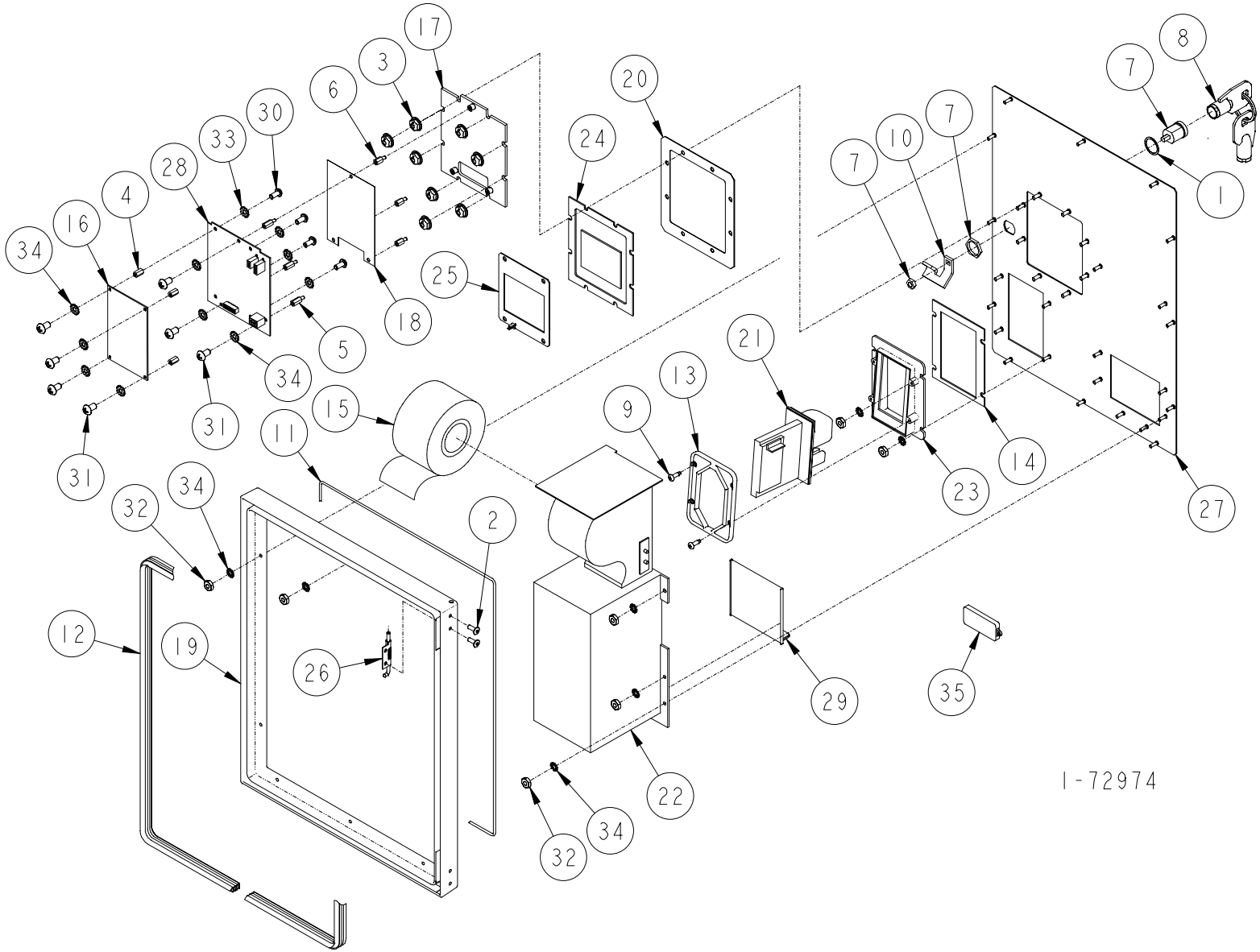

TI-RFID DIAL ASSEMBLY

ITEM NO.	PART NO.	DESCRIPTION
1	2-127656	Lock Gasket
2	1-128281	Pop Rivet
3	1-228671	#8-32 Capped Washer Locknut
4	5-229276	Hex Standoff
5	10-230684	#6-32 x 1/2" Long M-F Standoff
6	11-230684	#6-32 x 3/8" Long M-F Standoff
7	1-231841	Waterproof Lock
8	2-231841	Tubular Key (TPX 88)
9	1-232848	Phillips Pan Head Self Tapping Screw
10	1-233673	Lock Cam
11	1-233680	Dial Plate Seal
12	1-233681	Dial Seal
13	1-233683	Card Reader Clamp
14	1-233687	Cushion
15	1-233712	Paper Roll
16	1-233767	Multi Protocol Reader
17	233787-1	Display Panel Assembly
18	1-233809	LED Diffuser
19	1-233862	Door Frame
20	6-320484	RFID Cushion
21	1-321119	Cardreader
22	1-321147	Seiko Printer
23	1-321150	Card Reader Bezel
24	1-321464	RFID Display Panel
25	1-321465	RFID Antenna Assembly
26	4180003	Door Hinge Assembly
27	12-422755	Door Panel
28	422951-1	LED Board Assembly
29	51-01448-00	Receipt Door
30	26-50021	#40-40 x 1/4" Long Phillips Round Head Machine Screw
31	88-50021	#6-32 x 1/4" Long Phillips Round Head Machine Screw
32	03-50211	#6-32 Hex Machine Nut
33	01-50762	#4 Shakeproof Lockwasher
34	03-50762	#6 Shakeproof Lockwasher
35	<u>Tag (Demo Use)</u>	
	6-321627	Vehicle
	7-321627	Key

<u>For complete TI-RFID Dial Assembly order:</u>

321115-17 Less Card Reader & Printer

1-72974

ACCESS DIAL ASSEMBLY
(LEFT SIDE)
WITH OR WITHOUT PUMP STOP

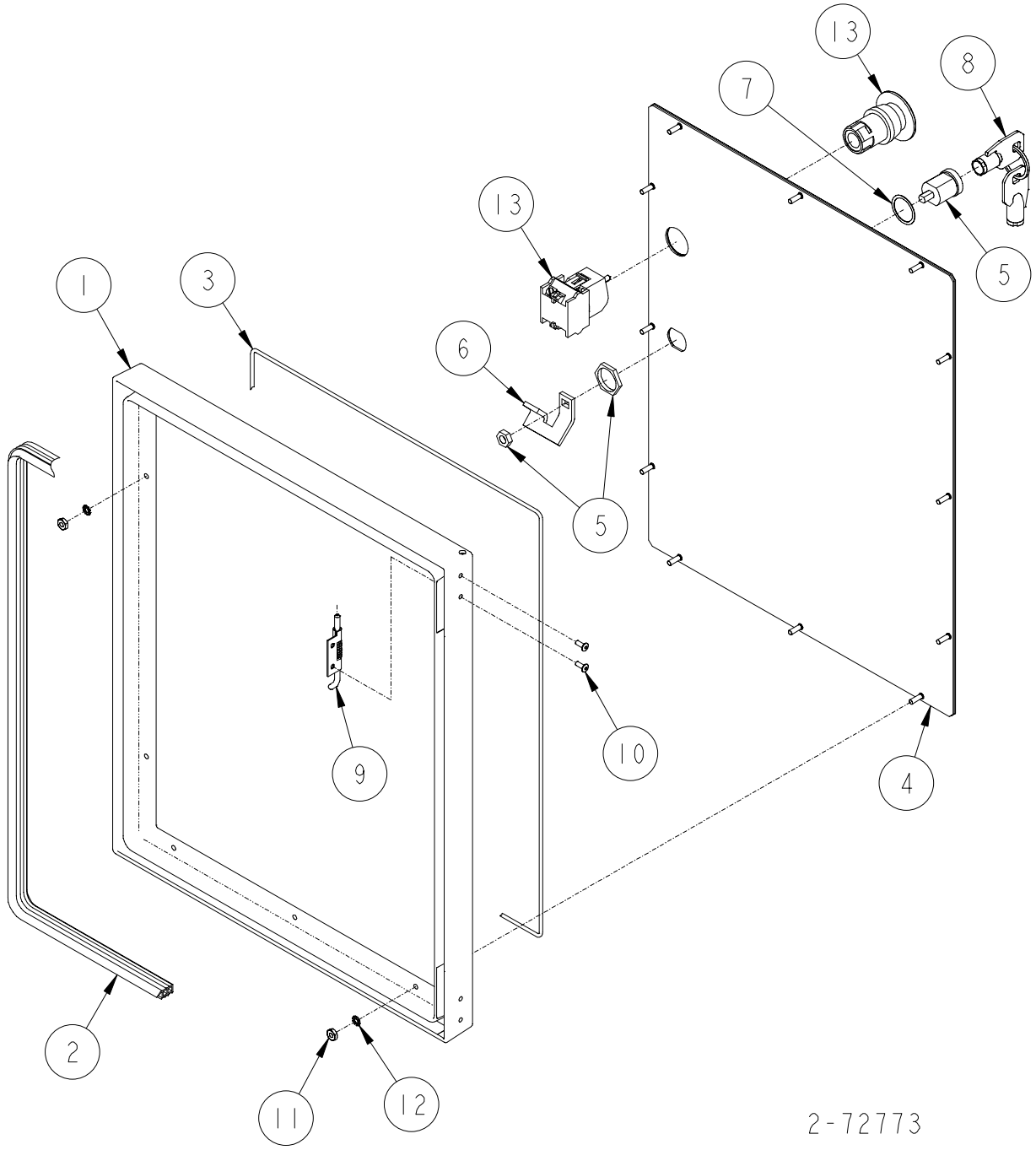

ACCESS DIAL ASSEMBLY
(Left Side)
WITH OR WITHOUT PUMP STOP

ITEM NO.	PART NO.	DESCRIPTION
1	1-233862	Door Frame
2	1-233681	Dial Seal
3	1-233680	Dial Plate Seal
4	Door Panel	
	1-422755	No Emergency Stop Switch Hole
	15-422755	With Emergency Stop Switch Hole
5	1-231841	Waterproof Lock
6	1-233673	Lock Cam
7	2-127656	Lock Gasket
8	2-231841	Tubular Key (TPX 88)
9	4180003	Door Hinge Assembly
10	1-128281	Pop Rivet
11	03-50211	#6-32 Hex Machine Nut
12	03-50762	#6 Shakeproof Lockwasher
13	3-229609	Emergency Stop Switch

For complete Access Door Assembly order:

321115-1	Without Pump Stop
321115-23	With Pump Stop

2-72773

6
A

DIAL BLANK ASSEMBLY

(CENTER & RIGHT SIDE)

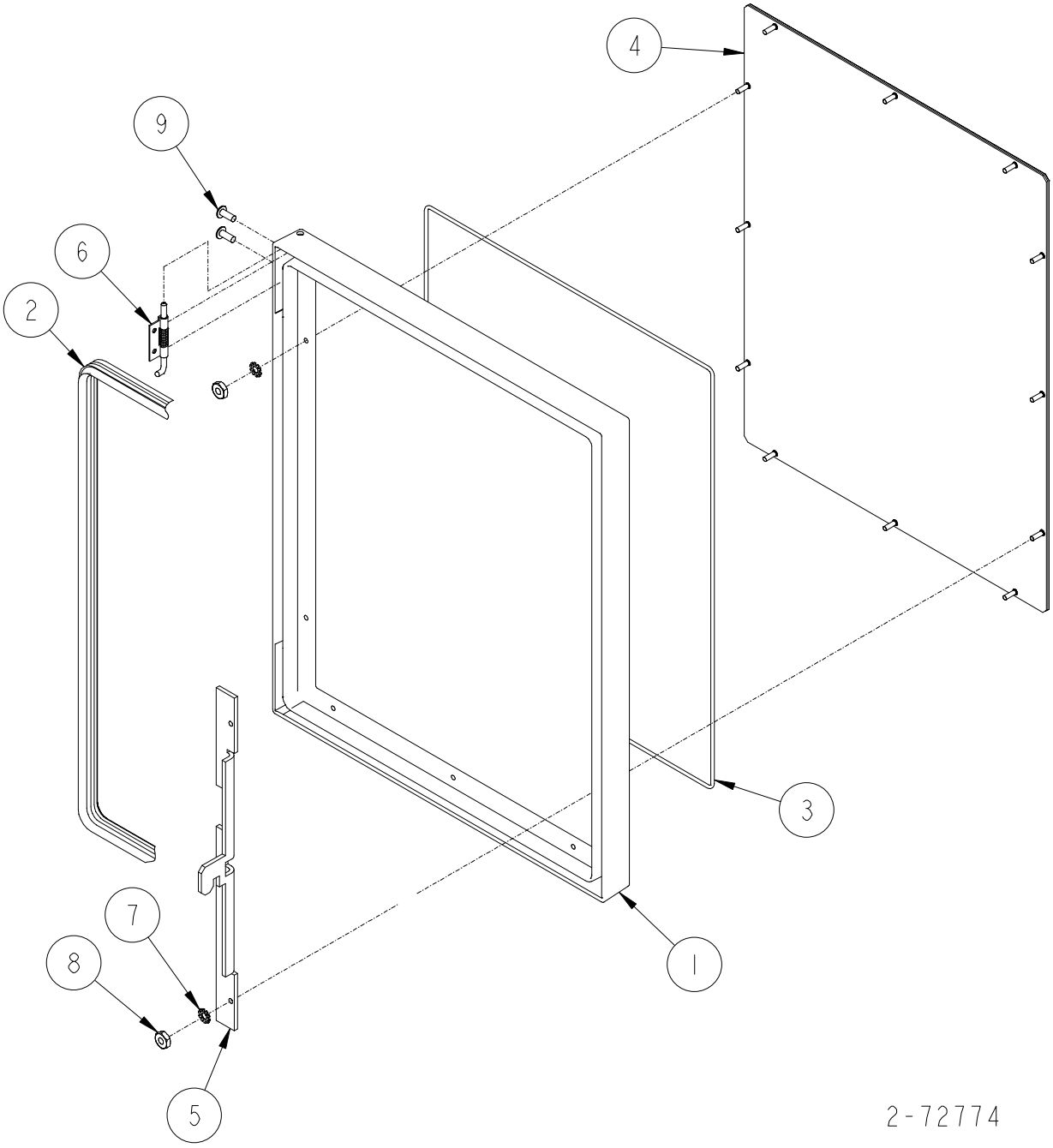

DIAL BLANK ASSEMBLY
(Center & Right Side)

ITEM NO.	PART NO.	DESCRIPTION
1	1-233862	Door Frame
2	1-233681	Dial Seal
3	1-233680	Dial Plate Seal
4	4-422755	Door Panel
5	1-321099	Dial Latch
6	4180002	Door Hinge Assembly
7	03-50762	#6 Shakeproof Lockwasher
8	03-50211	#6-32 Hex Machine Nut
9	1-128281	Pop Rivet

Reference for Tokheim internal use only:

321115-4 Access Door Assembly

1-72774

6
A

MONEY/VOLUME PANEL COLOR CHART

Color	p#	6th Digit Color Code	Customer
Black	P2133	0	
White	P2213	1	
Blue	P2312	2	Exxon
Silver	P2144	3	Amoco
BP Gray	P2086	4	BP
Red	P0603	5	Merit

Reference for Tokheim internal use only

422723 Monry/Volume Panel Assembly

1-72823